UG122: BGM111 Bluetooth Module Radio Board User's Guide

A Silicon Labs Wireless Starter Kit for the BGM111 Blue Gecko *Bluetooth*® Module is an excellent starting point to get familiar with the device, and it provides all necessary tools for developing a Silicon Labs wireless application.

The Wireless Starter Kit Mainboard contains sensors and peripherals enabling easy demonstration of some of the BGM111's many capabilities. An on-board J-Link debugger allows debugging of the attached radio board as well as providing a debug connection for external hardware.

A plug-in Radio Board contains the reference design for the BGM111 itself, including the RF section and device-specific hardware.

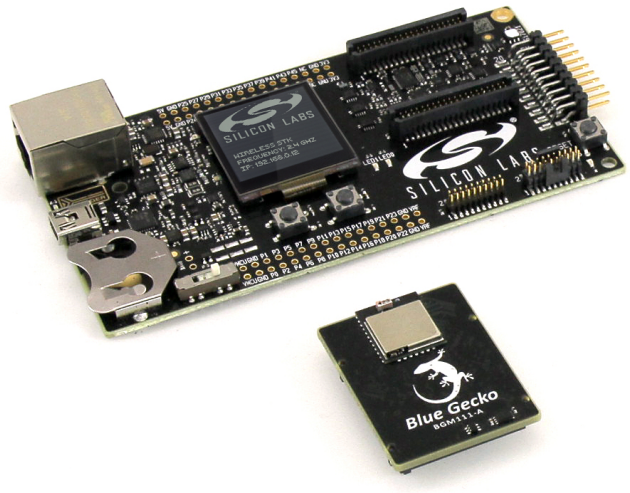

WSTK MAINBOARD FEATURES

- Ethernet and USB connectivity
- SEGGER J-Link on-board debugger
- Supports debugging the attached radio board or an external device
- Silicon Labs' Si7021 Relative Humidity and Temperature sensor
- Ultra low power 128x128 pixel Memory LCD
- User LEDs / Pushbuttons
- 20-pin 2.54 mm header for expansion boards
- Breakout pads for direct access to radio board I/O pins
- Power sources include USB and CR2032 coin cell.

BRD4300A RADIO BOARD FEATURES

- BGM111 Blue Gecko Bluetooth Module with 256 kB Flash and 32 kB RAM, with integrated chip antenna, RF matching network, crystals and decoupling.

EXTENSION BOARD FEATURES

- Accelerometer
- Buttons and LEDs
- Joystick

EXPANSION BOARD FEATURES

- Accelerometer
- Buttons and LEDs
- Joystick

SOFTWARE SUPPORT

- Blue Gecko Bluetooth Software
- Blue Gecko Bluetooth SDK
- Simplicity Studio
- iOS and Android applications

1. Introduction

The BGM111 Blue Gecko Bluetooth Module itself is featured on a Radio Board that forms a complete reference design, inluding the RF section and other components.

The BGM111 Radio Board plugs directly into a Wireless Starter Kit Mainboard. The WSTK Mainboard features several tools for easy evaluation and development of wireless applications. An on-board J-Link debugger enables programming and debugging on the target device over USB or Ethernet. The Advanced Energy Monitor (AEM) offers real-time current and voltage monitoring. A virtual COM port interface (VCOM) provides an easy-to-use serial port connection over USB or Ethernet. The Packet Trace Interface (PTI) offers invaluable debug information about transmitted and received packets in wireless links.

All debug functionality, including AEM, VCOM and PTI, can also be used towards external target hardware instead of the attached radio board.

To further enhance its usability, the WSTK Mainboard contains sensors and peripherals demonstrating some of the BGM111's many capabilities.

The Wireless Starter Kit for BGM111 includes an add-on board (BRD8006A) that can be connected to the WSTK Mainboard expansion header. The expansion board contains additional peripherals such as an accelerometer, buttons, LEDs, joystick and a footprint for an I2C authentication device.

1.1 Radio Boards

A Wireless Starter Kit consists of one or more mainboards and radio boards that plug into the mainboard. Different radio boards are available. Each featuring different Silicon Labs devices with different operating frequency bands.

Since the mainboard is designed to work with all different radio boards, the actual pin mapping from a device pin to a mainboard feature is done on the radio board. This means that each radio board has its own pin mapping to the Wireless Starter Kit features such as buttons, LEDs, the display, the EXP header and the breakout pads. Because this pin mapping is different for every radio board, it is important that the correct document be consulted which shows the kit features *in context* of the radio board plugged in.

This document explains how to use the Wireless Starter Kit (Wireless STK) when the BGM111 Bluetooth Module Radio Board (BRD4300A) is combined with a Wireless STK Mainboard. The combination of these two boards is hereby referred to as a Wireless Starter Kit (Wireless STK).

1.2 Ordering Information

BRD4300A can be obtained as part of SLWSTK6101C Blue Gecko Module Wireless Starter Kit or as a separate radio board, SLWRB4300A.

Table 1.1. Ordering Information

Part Number	Description	Contents	Notes
SLWSTK6101A	Blue Gecko Module Wireless Starter Kit	1x BRD4001A Wireless Starter Kit Mainboard 1x BRD4300A BGM111 Bluetooth Module Radio Board 1x BRD8006A Blue Gecko Module Kit Add-on Board 1x CR2032 Lithium battery 1x USB Type A <-> USB Mini-B cable	Obsoleted
SLWSTK6101B	Blue Gecko Module Wireless Starter Kit	1x BRD4001A Wireless Starter Kit Mainboard 1x BRD4300A BGM111 Bluetooth Module Radio Board 1x BRD4300B BGM113 Bluetooth Module Radio Board 1x BRD8006A Blue Gecko Module Kit Add-on Board 1x CR2032 Lithium battery 1x USB Type A <-> USB Mini-B cable	Obsoleted
SLWSTK6101C	Blue Gecko Module Wireless Starter Kit	1x BRD4001A Wireless Starter Kit Mainboard 1x BRD4300A BGM111 Bluetooth Module Radio Board 1x BRD4302A BGM121 Bluetooth System-in-Package Radio Board 1x BRD8006A Blue Gecko Module Kit Add-on Board 1x CR2032 Lithium battery 1x USB Type A <-> USB Mini-B cable	
SLWRB4300A	BGM111 Bluetooth Module Radio Board	1x BRD4300A BGM111 Bluetooth Module Radio Board	

1.3 Getting Started

Detailed instructions for how to get started can be found on the Silicon Labs web pages:

http://www.silabs.com/bluetooth-getstarted

2. Kit Hardware Overview

The layout of the BGM111 Bluetooth Module Wireless Starter Kit is shown in the figure below.

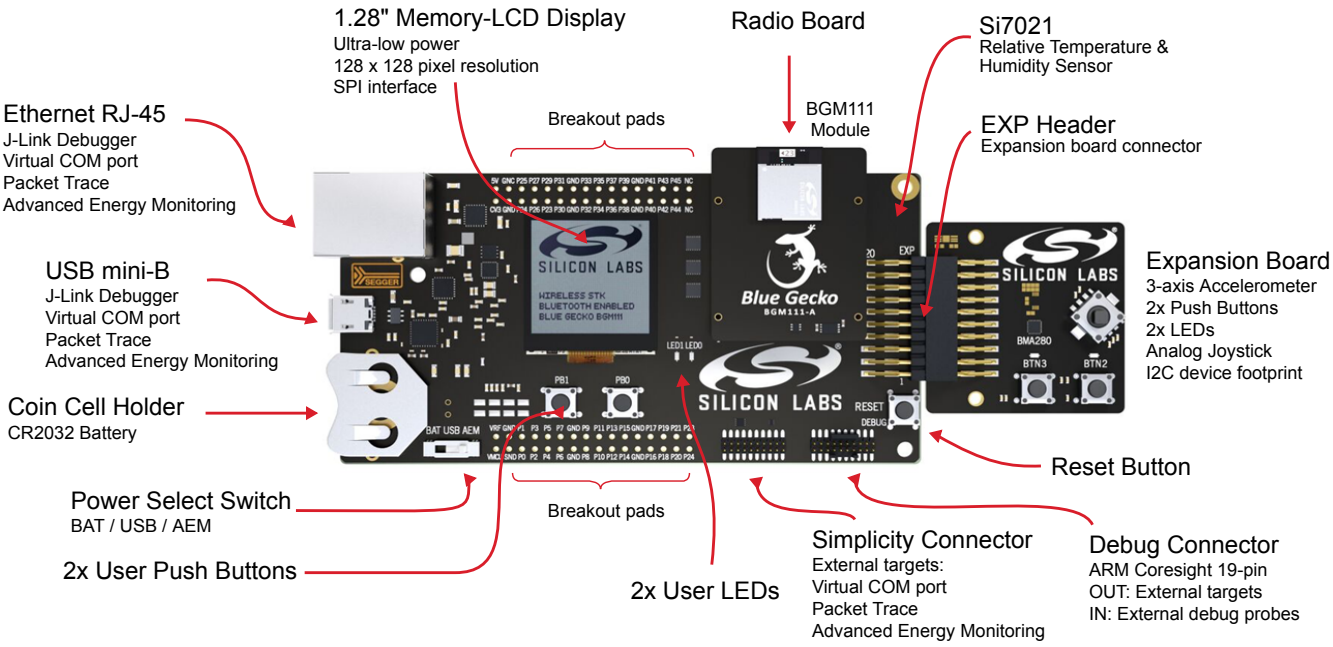

Figure 2.1. Kit Hardware Overview

3. Kit Block Diagram

An overview of the BGM111 Bluetooth Module Wireless Starter Kit is shown in the figure below.

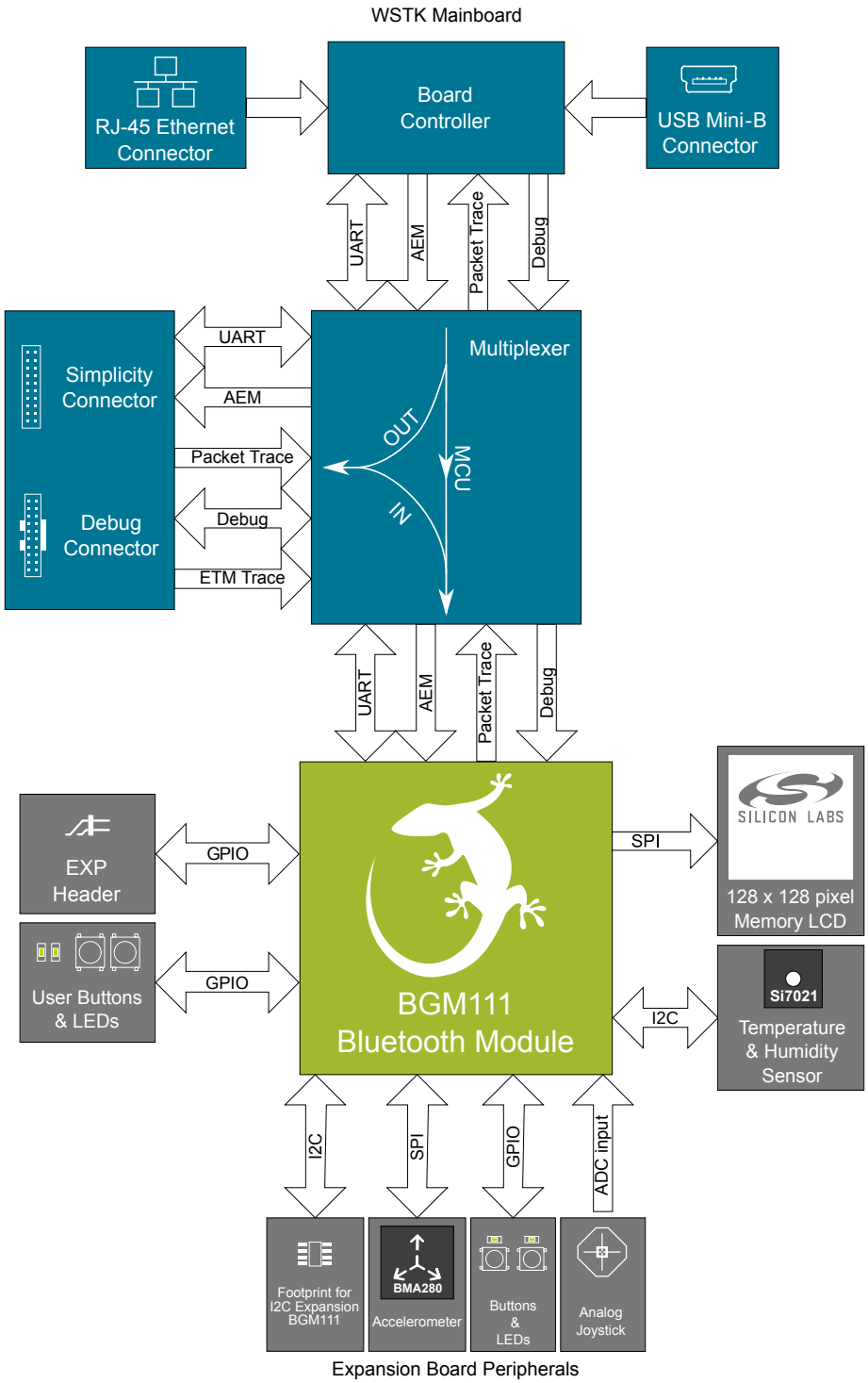

Figure 3.1. Kit Block Diagram

4. Connectors

This chapter gives you an overview of the Wireless STK Mainboard connectivity. The placement of the connectors can be seen in the figure below.

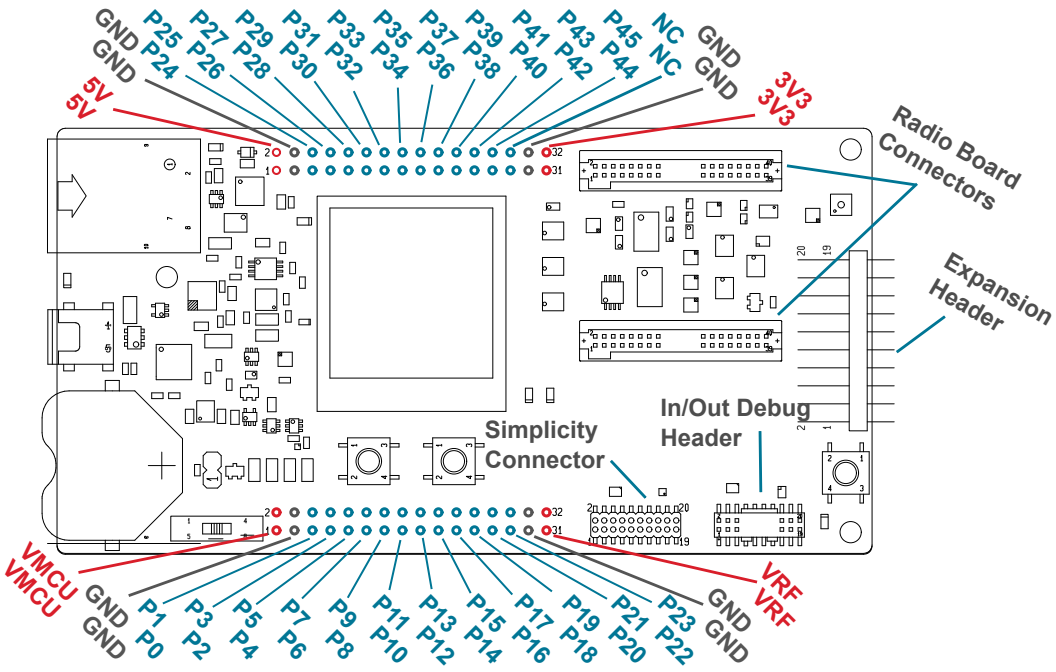

Figure 4.1. Mainboard Connector Layout

4.1 Breakout Pads

Most of the BGM111's pins are routed from the radio board to breakout pads at the top and bottom edges of the Wireless STK Mainboard. A 2.54 mm pitch pin header can be soldered on for easy access to the pins. The figure below shows you how the pins of the BGM111 maps to the pin numbers printed on the breakout pads. To see the available functions on each, please refer to the BGM111 Data Sheet.

Figure 4.2. Radio Board Pin Mapping on Breakout Pads

4.2 Expansion Header

On the right hand side of the board an angled 20-pin expansion header is provided to allow connection of peripherals or plugin boards. The connector contains a number of I/O pins that can be used with most of the BGM111 Blue Gecko's features. Additionally, the VMCU, 3V3 and 5V power rails are also exported.

The connector follows a standard which ensures that commonly used peripherals such as an SPI, a UART and an I2C bus are available on fixed locations in the connector. The rest of the pins are used for general purpose IO. This allows the definition of expansion boards that can plug into a number of different Silicon Labs starter kits.

The figure below shows the pin assignment of the expansion header for the BGM111 Wireless Starter Kit. Because of limitations in the number of available GPIO pins, some of the expansion header pins are shared with kit features.

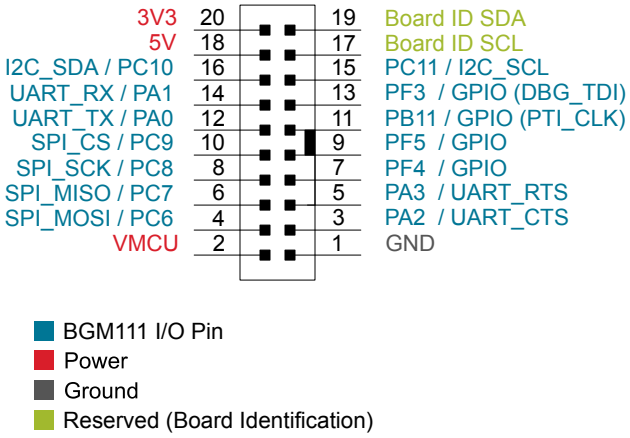

Figure 4.3. Expansion Header

4.2.1 Expansion Header Pin-out

The pin-routing on the BGM111 is very flexible, so most peripherals can be routed to any pin. However, many pins are shared between the Expansion Header and other functions on the Wireless STK Mainboard. Table 4.1 Expansion Header Pinout on page 7 includes an overview of the mainboard features that share pins with the Expansion Header.

Table 4.1. Expansion Header Pinout

Pin	Connection	EXP Header function	Shared feature	Peripheral mapping
20	3V3	Board controller supply		
18	5V	Board USB voltage		
16	PC10	I2C_SDA	SENSOR_I2C_SDA	I2C0_SDA #15
14	PA1	UART_RX	VCOM_RX	USART0_RX #0
12	PA0	UART_TX	VCOM_TX	USART0_TX #0
10	PC9	SPI_CS		USART1_CS #11
8	PC8	SPI_SCLK	DISP_SCLK	USART1_CLK #11
6	PC7	SPI_MISO		USART1_RX #11
4	PC6	SPI_MOSI	DISP_MOSI	USART1_TX #11
2	VMCU	BGM111 voltage domain, included in AEM measurements.		
19	BOARD_ID_SDA	Connected to Board Controller for identification of add-on boards.		
17	BOARD_ID_SCL	Connected to Board Controller for identification of add-on boards.		
15	PC11	I2C_SCL	SENSOR_I2C_SCL	I2C0_SCL #15
13	PF3	GPIO	DBG_TDI	
11	PB11	GPIO	PTI_CLK	
9	PF5	GPIO		
7	PF4	GPIO		
5	PA3	UART_RTS	VCOM_RTS	USART0_CS #0
3	PA2	UART_CTS	VCOM_CTS	USART0_CLK #0
1	GND	Ground		

Note: Pin PF3 is used for DBG_TDI in JTAG mode only. When Serial Wire Debugging is used, PF3 can be used for other purposes.

4.3 Debug Connector

The Debug Connector serves multiple purposes based on the "debug mode" setting which can be configured in Simplicity Studio. When the debug mode is set to "Debug IN", the debug connector can be used to connect an external debugger to the BGM111 on the radio board. When set to "Debug OUT", this connector allows the kit to be used as a debugger towards an external target. When set to "Debug MCU" (default), the connector is isolated from both the on-board debugger and the radio board target device.

Because this connector is electronically switched between the different operating modes, it can only be used when the Board Controller is powered (i.e. J-Link USB cable connected). If debug access to the target device is required when the Board Controller is unpowered, connect directly to the appropriate breakout pins.

The pinout of the connector follows that of the standard ARM Cortex Debug+ETM 19-pin connector. The pinout is described in detail below. Even though the connector has support for both JTAG and ETM Trace, it does not necessarily mean that the kit or the on-board target device supports this.

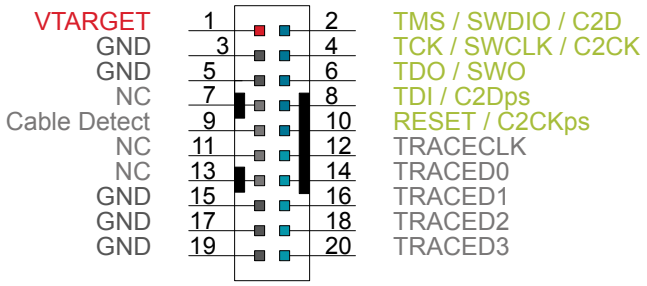

Figure 4.4. Debug Connector

Note: The pinout matches the pinout of an ARM Cortex Debug+ETM connector, but these are not fully compatible as pin 7 is physically removed from the Cortex Debug+ETM connector. Some cables have a small plug that prevent them from being used when this pin is present. If this is the case, remove the plug, or use a standard 2x10 1.27 mm straight cable instead.

Table 4.2. Debug Connector Pin Descriptions

Pin number(s)	Function	Description
1	VTARGET	Target voltage on the debugged application.
2	TMS / SDWIO / C2D	JTAG test mode select, Serial Wire data or C2 data
4	TCK / SWCLK / C2CK	JTAG test clock, Serial Wire clock or C2 clock
6	TDO/SWO	JTAG test data out or Serial Wire Output
8	TDI / C2Dps	JTAG test data in, or C2D "pin sharing" function
10	RESET / C2CKps	Target device reset, or C2CK "pin sharing" function
12	TRACECLK	
14	TRACED0	
16	TRACED1	
18	TRACED2	
20	TRACED3	
9	Cable detect	Connect to ground
11, 13	NC	Not connected
3, 5, 15, 17, 19	GND	Ground

4.4 Simplicity Connector

The Simplicity Connector enables the advanced debugging features, such as the AEM, the Virtual COM port and the Packet Trace Interface, to be used towards an external target. The pinout is illustrated in the figure below.

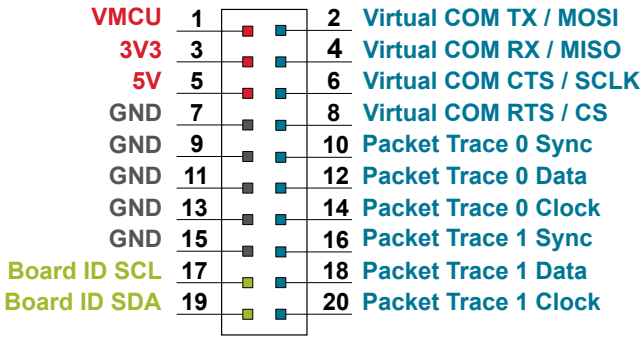

Figure 4.5. Simplicity Connector

Note: Current drawn from the VMCU voltage pin is included in the AEM measurements, while the 3V3 and 5V voltage pins are not. To monitor the current consumption of an external target with the AEM, unplug the Radio Board from the Wireless STK Mainboard to avoid that the Radio Board current consumption is added to the measurements.

Table 4.3. Simplicity Connector Pin Descriptions

Pin number(s)	Function	Description
1	VMCU	3.3 V power rail, monitored by the AEM
3	3V3	3.3 V power rail
5	5V	5 V power rail
2	VCOM_TX_MOSI	Virtual COM Tx/MOSI
4	VCOM_RX_MISO	Virtual COM Rx/MISO
6	VCOM_CTS_SCLK	Virtual COM CTS/SCLK
8	VCOM_RTS_CS	Virtual COM RTS/CS
10	PTI0_SYNC	Packet Trace 0 Sync
12	PTI0_DATA	Packet Trace 0 Data
14	PTI0_CLK	Packet Trace 0 Clock
16	PTI1_SYNC	Packet Trace 1 Sync
18	PTI1_DATA	Packet Trace 1 Data
20	PTI1_CLK	Packet Trace 1 Clock
17	EXT_ID_SCL	Board ID SCL
19	EXT_ID_SDA	Board ID SDA
7, 9, 11, 13, 15	GND	Ground

5. Power Supply and Reset

5.1 Radio Board Power Selection

The BGM111 on a Wireless Starter Kit can be powered by one of these sources:

- the debug USB cable;
- a 3 V coin cell battery; or
- a USB regulator on the Radio Board (for devices with USB support only).

The power source for the radio board is selected with the slide switch in the lower left corner of the Wireless STK Mainboard. Figure 5.1 Power Switch on page 10 shows how the different power sources can be selected with the slide switch.

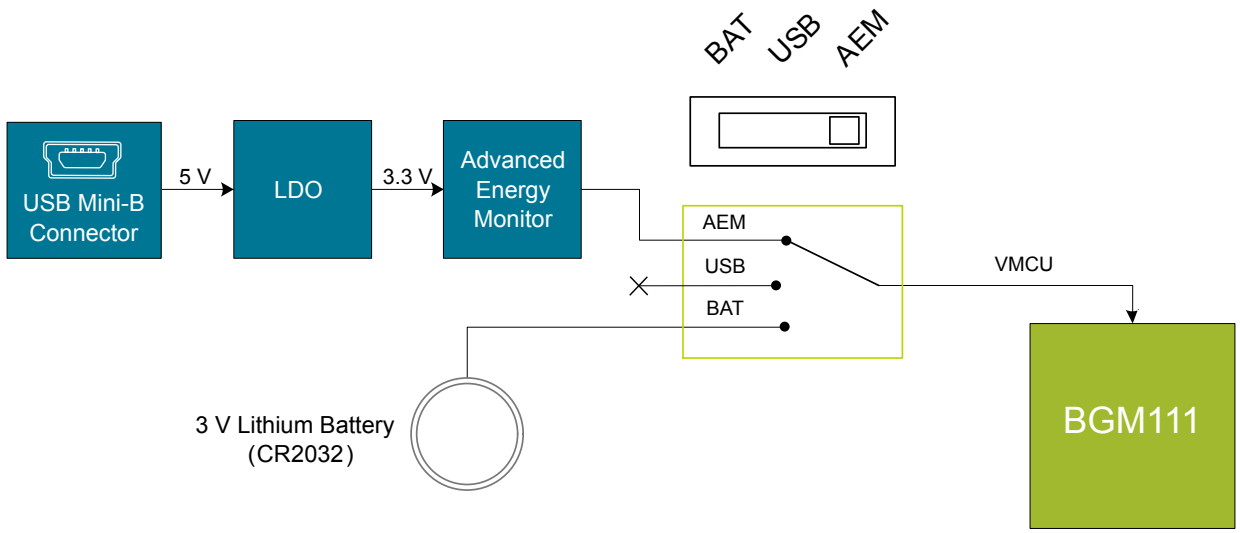

Figure 5.1. Power Switch

With the switch in the **AEM** position, a low noise 3.3 V LDO on the WSTK Mainboard is used to power the Radio Board. This LDO is again powered from the debug USB cable. The Advanced Energy Monitor is now also connected in series, allowing accurate high speed current measurements and energy debugging/profiling.

With the switch in the **USB** position, radio boards with USB-support can be powered by a regulator on the radio board itself. BRD4300A does not contain an USB regulator, and setting the switch in the **USB** postition will cause the BGM111 to be unpowered.

Finally, with the switch in the **BAT** position, a 20 mm coin cell battery in the CR2032 socket can be used to power the device. With the switch in this position no current measurements are active. This is the recommended switch position when powering the radio board with an external power source.

Note: The current sourcing capabilities of a coin cell battery might be too low to supply certain wireless applications.

Note: The Advanced Energy Monitor can only measure the current consumption of the BGM111 when the power selection switch is in the **AEM** position.

5.2 Board Controller Power

The board controller is responsible for important features such as the debugger and the Advanced Energy Monitor, and is powered exclusively through the USB port in the top left corner of the board. This part of the kit resides on a separate power domain, so a different power source can be selected for the target device while retaining debugging functionality. This power domain is also isolated to prevent current leakage from the target power domain when power to the Board Controller is removed.

The board controller power domain is not influenced by the position of the power switch.

The kit has been carefully designed to keep the board controller and the target power domains isolated from each other as one of them powers down. This ensures that the target BGM111 device will continue to operate in the **USB** and **BAT** modes.

5.3 BGM111 Reset

The BGM111 Bluetooth Module can be reset by a few different sources:

- A user pressing the RESET button.
- The on-board debugger pulling the #RESET pin low.
- An external debugger pulling the #RESET pin low.

In addition to the reset sources mentioned above, a reset to the BGM111 will also be issued during Board Controller boot-up. This means that removing power to the Board Controller (plugging out the J-Link USB cable) will not generate a reset, but plugging the cable back in will, as the Board Controller boots up.

6. Peripherals

The starter kit has a set of peripherals that showcase some of the features of the BGM111.

Be aware that most BGM111 I/O routed to peripherals are also routed to the breakout pads. This must be taken into consideration when using the breakout pads for your application.

6.1 Push Buttons and LEDs

The kit has two user push buttons marked PB0 and PB1. They are connected directly to the BGM111, and are debounced by RC filters with a time constant of 1 ms. The buttons are connected to pins PF6 and PF7.

The kit also features two yellow LEDs marked LED0 and LED1, that are controlled by GPIO pins on the BGM111. The LEDs are connected to pins PF6 and PF7 in an active-high configuration.

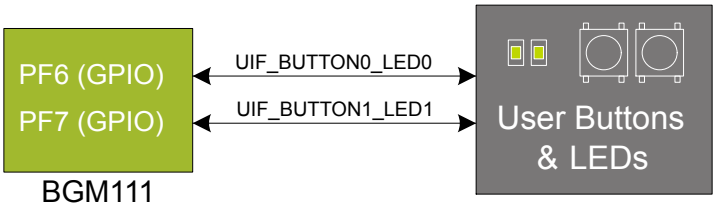

Figure 6.1. Buttons and LEDs

6.2 Memory LCD-TFT Display

A 1.28-inch SHARP Memory LCD-TFT is available on the kit to enable interactive applications to be developed. The display has a high resolution of 128 by 128 pixels, and consumes very little power. It is a reflective monochrome display, so each pixel can only be light or dark, and no backlight is needed in normal daylight conditions. Data sent to the display is stored in the pixels on the glass, which means no continous refreshing is required to maintain a static image.

The display interface consists of an SPI-compatible serial interface and some extra control signals. Pixels are not individually addressable, instead data is sent to the display one line (128 bits) at a time.

The Memory LCD-TFT display is shared with the kit Board Controller, allowing the Board Controller application to display useful information when the user application is not using the display. The user application always controls ownership of the display with the DISP_ENABLE signal:

- DISP_ENABLE = LOW: The Board Controller has control of the display
- DISP_ENABLE = HIGH: The user application (BGM111) has control of the display

Power to the display is sourced from the target application power domain when the BGM111 controls the display, and from the Board Controller's power domain when the DISP_ENABLE line is low. Data is clocked in on DISP_SI when DISP_CS is high, and the clock is sent on DISP_SCLK. The maximum supported clock speed is 1.1 MHz.

DISP_COM is the "COM Inversion" line. It must be pulsed periodically to prevent static build-up in the display itself. Please refer to the display application information for details on driving the display:

http://www.sharpmemorylcd.com/1-28-inch-memory-lcd.html

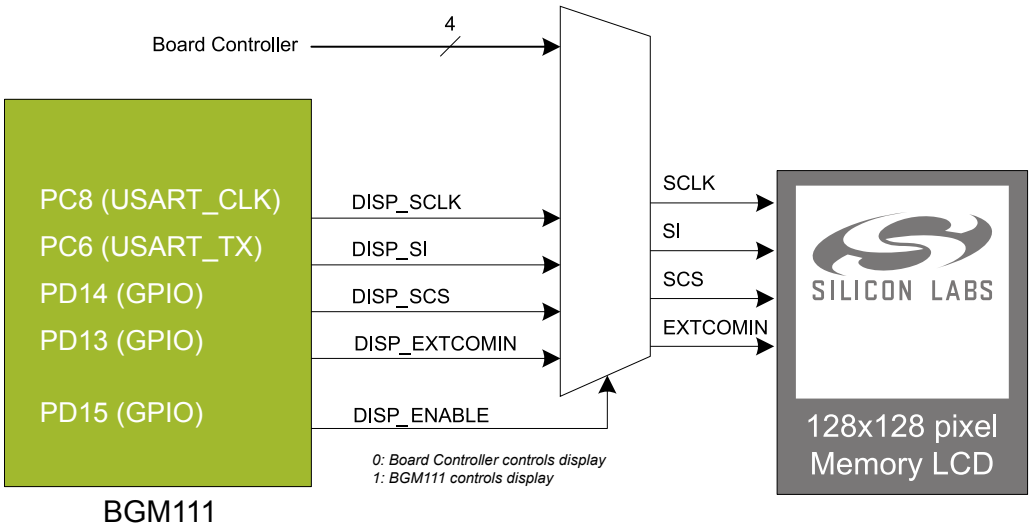

Figure 6.2. 128x128 Pixel Memory LCD

6.3 Si7021 Relative Humidity and Temperature Sensor

The Si7021 I^2C relative humidity and temperature sensor is a monolithic CMOS IC integrating humidity and temperature sensor elements, an analog-to-digital converter, signal processing, calibration data, and an I^2C Interface. The patented use of industry-standard, low-K polymeric dielectrics for sensing humidity enables the construction of low-power, monolithic CMOS Sensor ICs with low drift and hysteresis, and excellent long term stability.

The humidity and temperature sensors are factory-calibrated and the calibration data is stored in the on-chip non-volatile memory. This ensures that the sensors are fully interchangeable, with no recalibration or software changes required.

The Si7021 is available in a 3x3 mm DFN package and is reflow solderable. It can be used as a hardware- and software-compatible drop-in upgrade for existing RH/ temperature sensors in 3x3 mm DFN-6 packages, featuring precision sensing over a wider range and lower power consumption. The optional factory-installed cover offers a low profile, convenient means of protecting the sensor during assembly (e.g., reflow soldering) and throughout the life of the product, excluding liquids (hydrophobic/oleophobic) and particulates.

The Si7021 offers an accurate, low-power, factory-calibrated digital solution ideal for measuring humidity, dew-point, and temperature, in applications ranging from HVAC/R and asset tracking to industrial and consumer platforms.

The I^2C bus used for the Si7021 is shared with the Expansion Header. The temperature sensor is normally isolated from the I^2C line. To use the sensor, SENSOR_ENABLE (tied high) must be set high. When enabled, the sensor's current consumption is included in the AEM measurements.

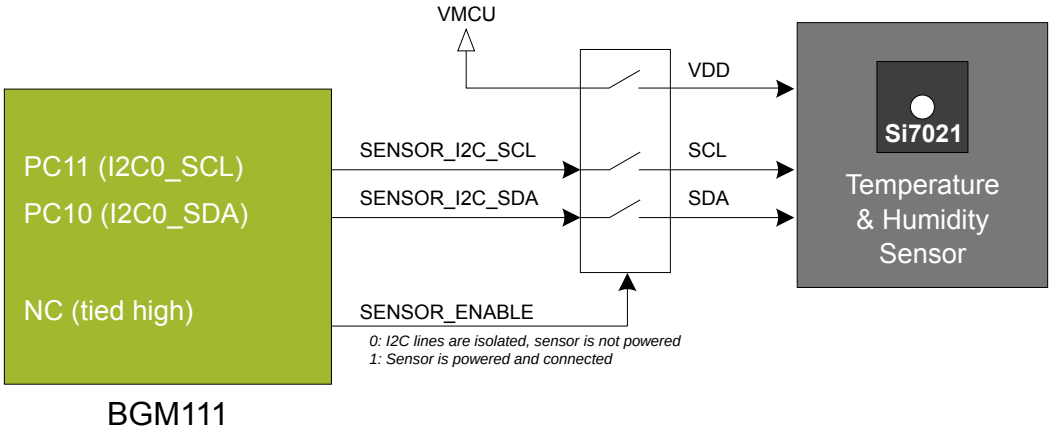

Figure 6.3. Si7021 Relative Humidity and Temperature Sensor

Please refer to the Silicon Labs web pages for more information: http://www.silabs.com/humidity-sensors

6.4 Virtual COM Port

An asynchronous serial connection to the board controller is provided for application data transfer between a host PC and the target BGM111. This eliminates the need for an external serial port adapter.

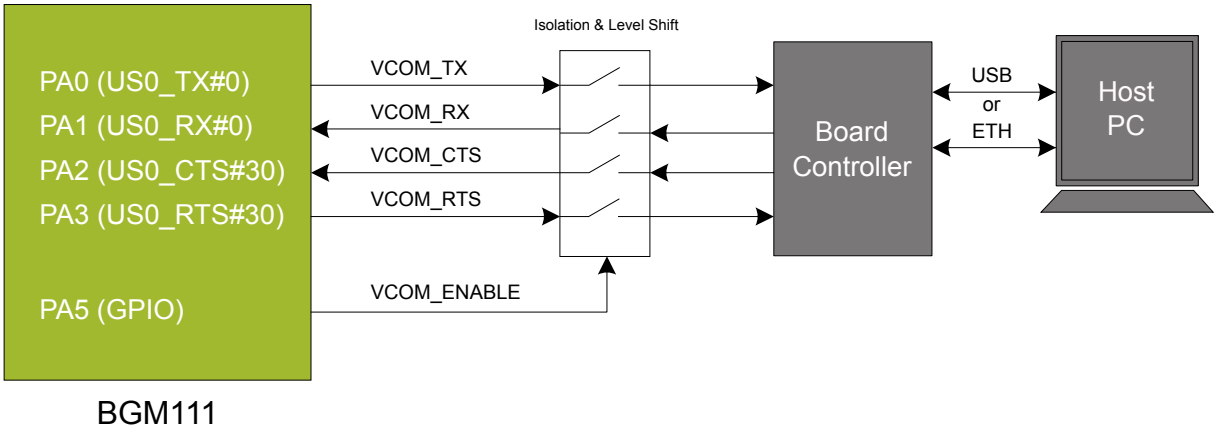

Figure 6.4. Virtual COM Port Interface

The Virtual COM port consists of a physical UART between the target device and the board controller, and a logical function in the board controller that makes the serial port available to the host PC over USB or Ethernet. The UART interface consists of four pins and an enable signal.

Table 6.1. Virtual COM Port Interface Pins

Signal	Description
VCOM_TX	Transmit data from the BGM111 to the board controller
VCOM_RX	Receive data from the board controller to the BGM111
VCOM_CTS	Clear to Send hardware flow control input, asserted by the board controller when it is ready to receive more data
VCOM_RTS	Request to Send hardware flow control output, asserted by the BGM111 when it is ready to receive more data
VCOM_ENABLE	Enables the VCOM interface, allowing data to pass through to the board controller.

The parameters of the serial port, such as baud rate or flow control, can be configured using the admin console. The default settings depends on which radio board is used with the Wireless STK Mainboard. Please see 11. Device Connectivity for more details.

Note: The VCOM port is only available when the board controller is powered, which requires the J-Link USB cable to be inserted.

7. Board Controller

The Wireless STK Mainboard contains a microcontroller separate from the BGM111 Blue Gecko that is responsible for some of the advanced kit features provided. This microcontroller is referred to as the "Board Controller", and is not programmable by the user. The board controller acts as an interface between the host PC and the target device on the radio board, as well as handling some house-keeping functions on the board.

Some of the kit features actively managed by the board controller are:

- The On-board Debugger, which can flash and debug both on-board and external targets.
- The Advanced Energy Monitor, which provides real-time energy profiling of the user application.
- The Packet Trace Interface , which is used in conjunction with PC software to provide detailed insight into an active radio network.
- The Virtual COM Port and Virtual UART interfaces, which provide ways to transfer application data between the host PC and the target processor.
- The Admin Console, which provides configuration of the various board features.

Silicon Labs publishes updates to the board controller firmware in form of firmware upgrade packages. These updates may enable new features or fix issues. See 12.2 Firmware Upgrades for details on firmware upgrade.

7.1 Admin Console

The admin console is a command line interface to the board controller on the kit. It provides functionality for configuring the kit behavior and retreiving configuration and operational parameters.

■ Connecting

The Wireless STK Mainboard must be connected to Ethernet using the Ethernet connector in the top left corner of the mainboard for the admin console to be available. See ● Ethernet Interface for details on the Ethernet connectivity.

Connect to the Admin Console by opening a telnet connection to the kit's IP address, port number 4902.

When successfully connected, a `WSTK>` prompt is displayed.

Built-in Help

The admin console has a built in help system which is accessed by the `help` command. The `help` command will print a list of all top level commands:

```
WSTK> help
*************** Root commands ****************
aem           AEM commands   [ calibrate, current, dump, ... ]
boardid       Commands for board ID probe.   [ list, probe ]
dbg           Debug interface status and control   [ info, mode,]
dch           Datachannel control and info commands   [ info ]
discovery     Discovery service commands.
net           Network commands.   [ dnslookup, geoprobe, ip ]
pti           Packet trace interface status and control   [ config, disable, dump, ... ]
quit          Exit from shell
sys           System commands   [ nickname, reset, scratch, ... ]
target        Target commands.   [ button, flashwrite, go, ... ]
time          Time Service commands   [ client, server ]
user          User management functions   [ login,]
```

The `help` command can be used in conjunction with any top level command to get a list of sub-commands with description. For example, `pti help` will print a list of all available sub-commands of `pti`:

```
WSTK> pti help
*************** pti commands ****************
config        Configure packet trace
disable       Disable packet trace
dump          Dump PTI packets to the console as they come
enable        Enable packet trace
info          Packet trace state information
```

This means that running `pti enable` will enable packet trace.

Command Examples

PTI Configuration

```
pti config 0 efruart 1600000
```

Configures PTI to use the "EFRUART" mode at 1.6 Mb/s.

Serial Port Configuration

```
serial config vcom handshake enable
```

Enables hardware handshake on the VCOM UART connection.

8. Expansion Board

The User Interface Expansion Board included with the BGM111 Wireless STK includes the following features:

- 1x 3-axis accelerometer (Bosch Sensortech BMA280)
- 1x Joystick with 9 measurable positions
- 2x Push buttons and 2x LEDs

The connections between the Expansion Board and the BGM111 are shown in the figure below:

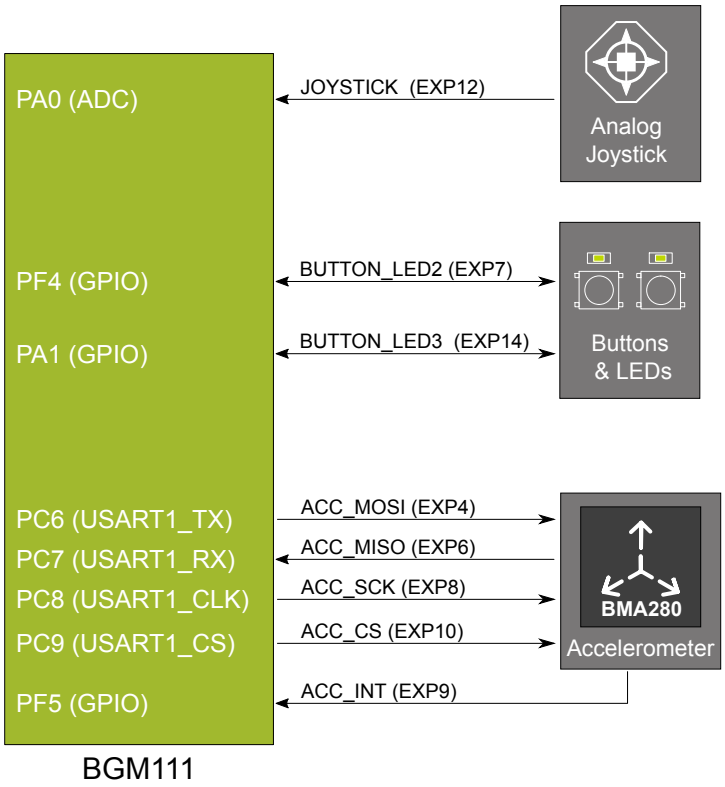

Figure 8.1. User Interface Expansion Board

The following sections contain more detailed information about each feature.

8.1 Accelerometer

Bosch Sensortec BMA280 is a triaxial, low-power, low-g accelerometer sensor with SPI interface. It features 14-bit digital resolution and allows very low-noise measurement of acceleration in 3 perpendicular axes and can therefore sense tilt, motion, shock and vibration.

Please refer to Bosch Sensortec's product page for a detailed datasheet of this sensor: http://www.bosch-sensortec.com/bst/products/all_products/bma280

8.2 Push Buttons and LEDs

The Expansion Board contains two push buttons (marked **BTN2** and **BTN3** on the PCB) and two LEDs (LED2 and LED3, not marked but placed correspondingly above the push button markings). One push button and one LED share the same I/O pin on the BGM111. The push button is connected to the LED through a transistor, allowing the I/O to be used either as an input (for reading the push button state) or as an output (to control the LED state on or off).

When configured as an input, **"0"** indicates that the button is being pressed and **"1"** that the push button is not being pressed. Likewise, when configured as an output, **"0"** will turn the LED on and **"1"** will turn it off.

Pressing a push button will also light up the corresponding LED because the LED is controlled by the same line (state) regardless of whether it is the BGM111 or the push button that pulls the line low.

The each button is debounced by an RC filter with a time constant of about 1 ms. Pressing the push button while having the pin configured as an output in high state (**"1"**) will not cause damage, but will cause extra current to flow.

8.3 Joystick

The analog joystick offers 9 measureable positions. This joystick is connected to the BGM111 pin **PD4**. Each of the joystick output pins are connected to a different resistor value to create a unique voltage that is measured by the internal ADC on the BGM111. The joystick output is connected to AD Channel 0 (**ADC0**). The figure below shows the connection between the joystick and the BGM111.

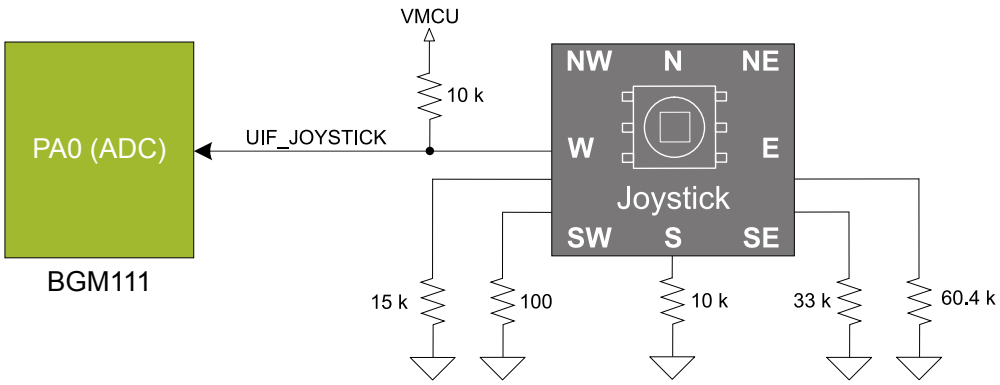

Figure 8.2. User Interface Expansion Board Joystick

The table below lists the expected output voltage from each joystick position.

Table 8.1. Joystick Output Voltage

Position	Resistor combinations [kohm]	Joystick output voltage [V][1]
Center press	0.1 / (0.1 + 10)	0.03 V
Up (N)	60.4 / (60.4 + 10)	2.83 V
Up-Right (NE)	{(N // E) / {(N // E) + 10 } = 21.34 / (21.34 + 10)	2.25 V
Right (E)	33 / (33 + 10)	2.53 V
Down-Right (SE)	(S // E) / {(S // E) + 10)} = 7.67 / (7.67 + 10)	1.43 V
Down (S)	10 / (10 + 10)	1.65 V
Down-Left (SW)	(S // W) / {(S // W) + 10)} = 6 / (6 + 10)	1.24 V
Left (W)	15 / (15 + 10)	1.98 V
Up-Left (NW)	(N // W) / {(N // W) + 10)} = 12.01 / (12.01 + 10)	1.80 V
Note: 1) Output Voltage is calculated with VMCU of 3.3 V .		

9. Advanced Energy Monitor

9.1 Introduction

Any embedded developer seeking to make his embedded code spend as little energy as the underlying architecture supports, needs tools to easily and quickly discover inefficiencies in the running application.

This is what the Simplicity Energy Profiler is designed to do. It will in real-time graph and log current as a function of time while correlating this to the actual target application code running on the BGM111. There are multiple features in the profiler software that allows for easy analysis, such as markers and statistics on selected regions of the current graph or aggregate energy usage by different parts of the application.

9.2 Theory of Operation

The Advanced Energy Monitor (AEM) circuitry on the board is capable of measuring current signals in the range of 0.1 µA to 95 mA, which is a dynamic range of alomst 120 dB. It can do this while maintaining approximately 10 kHz of current signal bandwidth. This is accomplished through a combination of a highly capable current sense amplifier, multiple gain stages and signal processing within the kit's board controller before the current sense signal is read by a host computer for display and/or storage.

The current sense amplifier measures the voltage drop over a small series resistor, and the gain stage further amplifies this voltage with two different gain settings to obtain two current ranges. The transition between these two ranges occurs around 250 µA.

The current signal is combined with the target processor's Program Counter (PC) sampling by utilizing a feature of the ARM CoreSight debug architecture. The ITM (Instrumentation Trace Macrocell) block can be programmed to sample the MCU's PC at periodic intervals (50 kHz) and output these over SWO pin ARM devices. When these two data streams are fused and correlated with the running application's memory map, an accurate statistical profile can be built, that shows the energy profile of the running application in real-time.

At kit power-up or on a power-cycle, and automatic AEM calibration is performed. This calibration compensates for any offset errors in the current sense amplifiers.

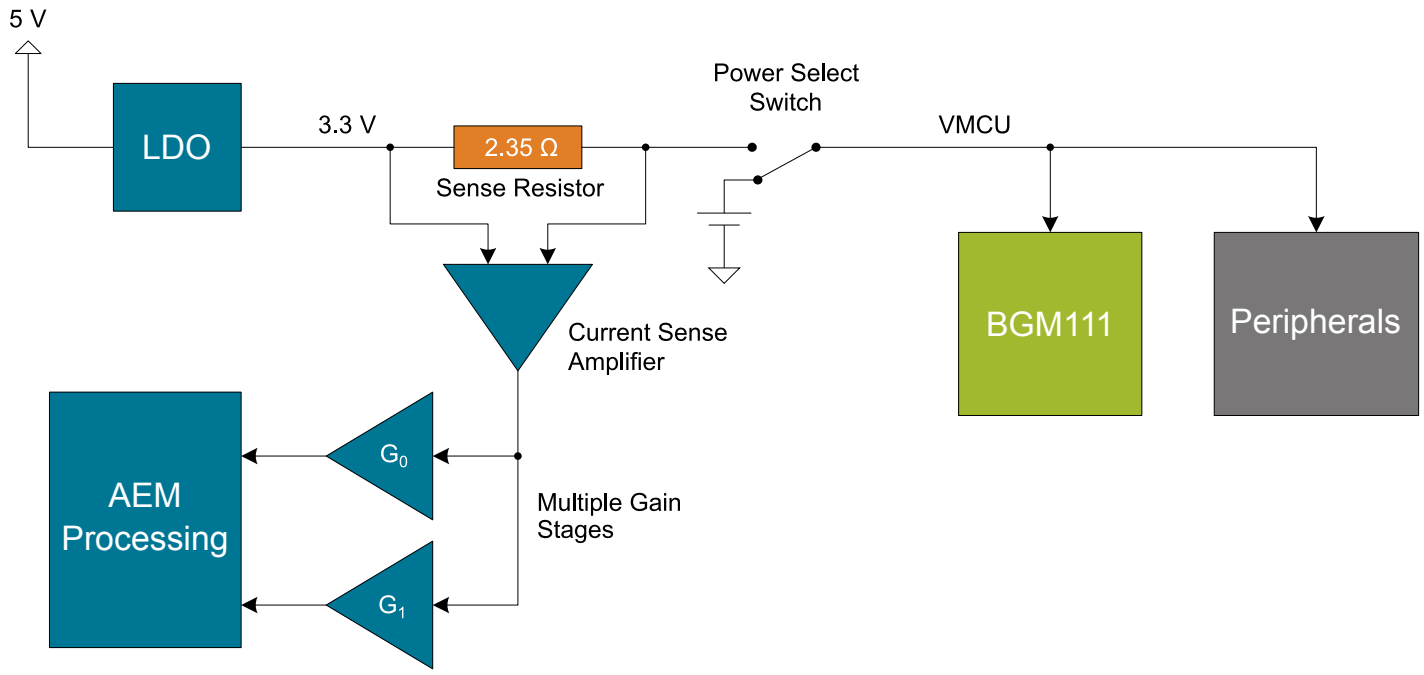

Figure 9.1. Advanced Energy Monitor

9.3 AEM Accuracy and Performance

The AEM is capable of measuring currents in the range of 0.1 µA to 95 mA. For currents above 250 µA, the AEM is accurate within 0.1 mA. When measuring currents below 250 µA, the accuracy increases to 1 µA. Even though the absolute accuracy is 1 µA in the sub 250 µA range, the AEM is able to detect changes in the current consumption as small as 100 nA.

The AEM current sampling rate is 10 kHz.

Note: The AEM circuitry only works when the kit is powered and the power switch is in the AEM position.

9.4 Usage

The AEM data is collected by the board controller and can be displayed by the Energy Profiler, available through Simplicity Studio. By using the Energy Profiler, current consumption and voltage can be measured and linked to the actual code running on the BGM111 in realtime.

10. On-Board Debugger

The Wireless Starter Kit contains an integrated debugger, which can be used to download code and debug the BGM111. In addition to programming the BGM111 on the kit, the debugger can also be used to program and debug external Silicon Labs EFM32, EFM8, EZR32 and EFR32 devices.

The debugger supports three different debug interfaces used with Silicon Labs devices:

- Serial Wire Debug, is used with all EFM32, EFR32 and EZR32 devices
- JTAG, which can be used with EFR32 and some EFM32 devices
- C2 Debug, which is used with EFM8 devices

In order for debugging to work properly, make sure you have the appropriate debug interface selected that works with your device. The debug connector on the board supports all three of these modes.

10.1 Host Interfaces

The Wireless Starter Kit supports connecting to the on-board debugger using either Ethernet or USB.

Many tools support connecting to a debugger using either USB or Ethernet. When connected over USB, the kit is identified by its J-Link serial number. When connected over Ethernet, the kit is normally identified by its IP address. Some tools also support using the serial number when connecting over Ethernet, this typically require the computer and the kit to be on the same subnet for the discovery protocol (using UDP broadcast packets) to work.

USB Interface

The USB interface is available whenever the USB Mini-B connector on the left hand side of the mainboard is connected to a computer.

Ethernet Interface

The Ethernet interface is available when the mainboard Ethernet connector in the top left corner is connected to a network. Normally, the kit will receive an IP address from a local DHCP server, and the IP address is printed on the LCD display. If your network does not have a DHCP server, you need to connect to the kit via USB and set the IP address manually using Simplicity Studio, Simplicity Commander or J-Link Configurator.

For the Ethernet connectivity to work, the kit must still be powered through the USB Mini-B connector. See 5.2 Board Controller Power for details.

Serial Number Identification

All Silicon Labs kits have a unique J-Link serial number which identifies the kit to PC applications. This number is 9 digits, and is normally on the form `44xxxxxxx`.

The J-Link serial number is normally printed at the bottom of the kit LCD display.

10.2 Debug Modes

Programming external devices is done by connecting to a target board through the provided Debug IN/OUT Connector, and by setting the debug mode to [**Out**]. The same connector can also be used to connect an external debugger to the BGM111 Bluetooth Module on the kit, by setting debug mode to [**In**].

Selecting the active debug mode is done with a drop-down menu in the Kit Manager tool in Simplicity Studio.

Debug MCU: In this mode the on-board debugger is connected to the BGM111 on the SLWSTK6101C.

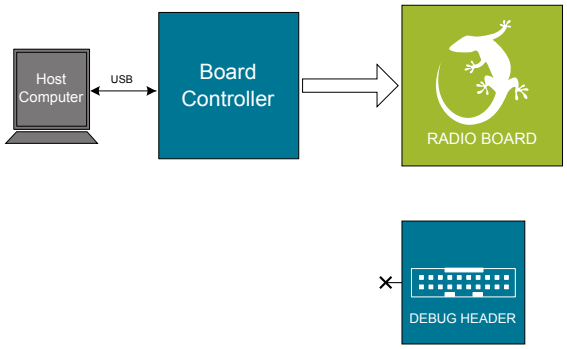

Figure 10.1. Debug MCU

Debug OUT: In this mode, the on-board debugger can be used to debug a supported Silicon Labs device mounted on a custom board.

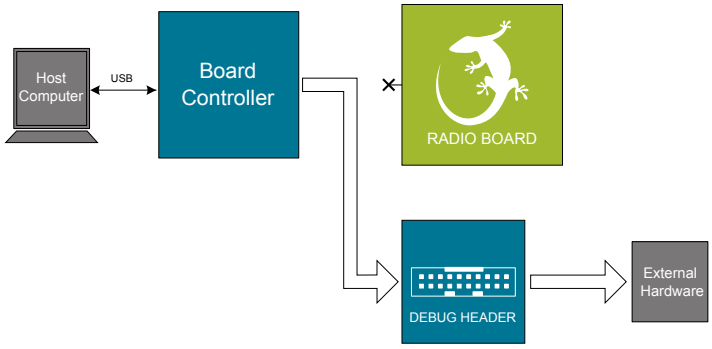

Figure 10.2. Debug OUT

Debug IN: In this mode, the on-board debugger is disconnected, and an external debugger can be connected to debug the BGM111 on the Wireless Starter Kit.

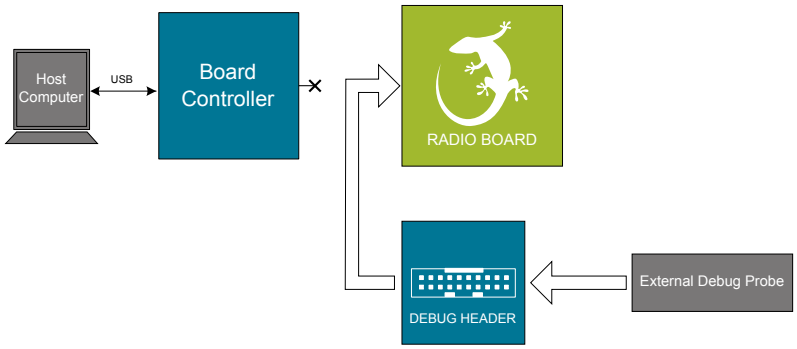

Figure 10.3. Debug IN

Note: For "Debug IN" to work, the board controller on the kit must be powered throught the USB connector.

10.3 Debugging During Battery Operation

When the BGM111 is powered by battery and the J-Link USB is still connected, the on-board debug functionality is available. If the USB power is disconnected, the Debug In mode will stop working.

If debug access is required when the target is running of another energy source, such as a battery, and the board controller is powered down, the user should make direct connections to the GPIO used for debugging. This can be done by connecting to the appropriate pins of the breakout pads. Some Silicon Labs kits provide a dedicated pin header for this purpose.

11. Device Connectivity

The Wireless STK Mainboard provides several convenient ways to communicate with a target application without soldering or using external hardware.

11.1 Virtual COM Port

When the target device drives the VCOM_ENABLE (PA5) signal high, a communication line to the Board Controller is enabled. The target can then communicate to the host computer via the Board Controller using USART0, Location 0 (TX pin PA0, RX pin PA1).

When enabling VCOM, the Board Controller makes communication to the host computer possible on the following interfaces:

- Virtual USB serial port using a CDC driver.
- TCP/IP, by connecting to the Wireless STK on port 4901 with a Telnet client.

Note: Only one of these can be used at the same time, meaning that if a socket is connected to port 4901, no data can be sent or received on the USB COM port.

12. Kit Manager and Upgrades

The Kit Manager is a program that comes with Simplicity Studio. It can perform various kit and device specific tasks.

12.1 Kit Manager Operation

This utility gives the ability to program the BGM111, upgrade the kit, lock and unlock devices and more. Some of the features will only work with Silicon Labs kits, while other will work with a generic J-Link debugger connected.

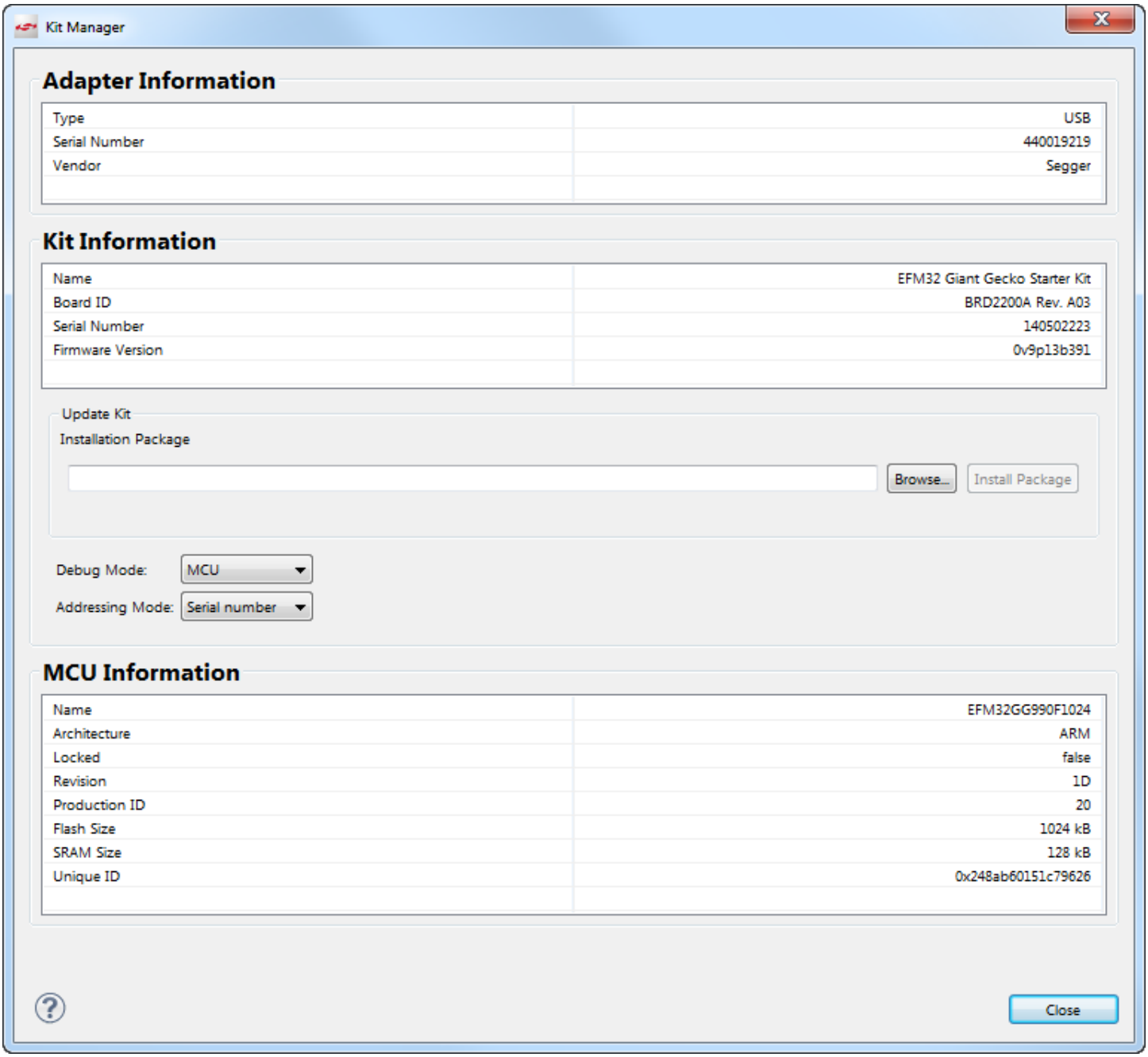

Figure 12.1. Kit Manager

12.2 Firmware Upgrades

Upgrading the kit firmware is done through Simplicity Studio. Simplicity Studio will automatically check for new updates on startup.

You can also use the Kit Manager for manual upgrades. Click the [**Browse**] button in the [**Update Kit**] section to select the correct file ending in ".emz". Then, click the [**Install Package**] button.

13. Radio Board Connectors

Radio Boards contain two dual-row, female socket, 0.05" pitch polarized connectors (P/N: SFC-120-T2-L-D-A-K-TR) which provide the interface to the Wireless Starter Kit Mainboard. The Mainboard has the corresponding male header pin connectors (P/N: TFC-120-02-F-D-LC-ND).

13.1 Radio Board Connector Pin Mapping

The figure below shows the pin mapping on the connector to the radio pins and their corresponding function on the Wireless Starter Kit Mainboard.

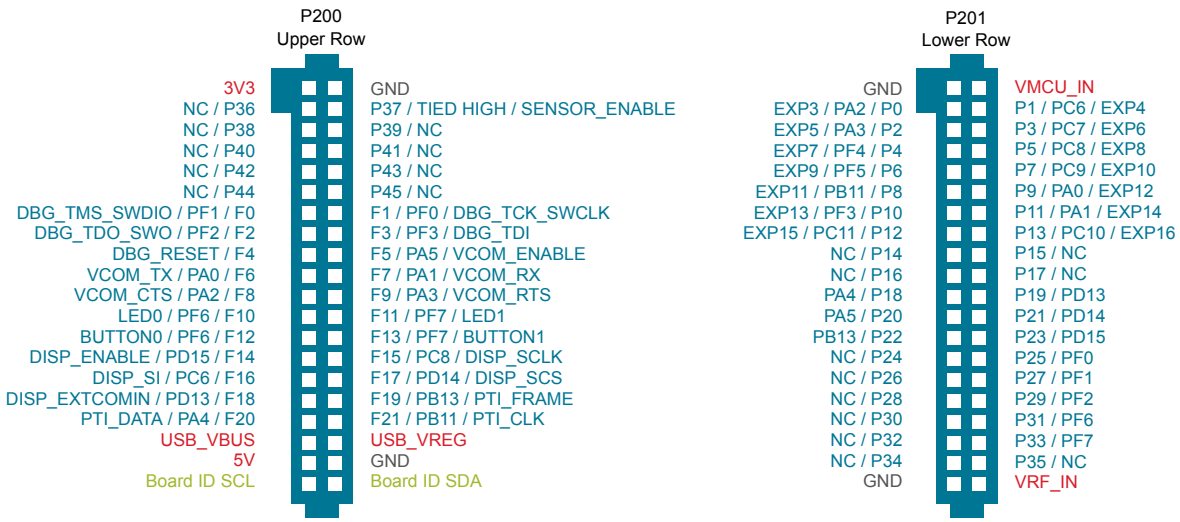

Figure 13.1. Radio Board Connectors

14. Mechanical Details

The mechanical layout of BRD4300A BGM111 Blue Gecko Bluetooth Module Radio Board is illustrated in the figures below.

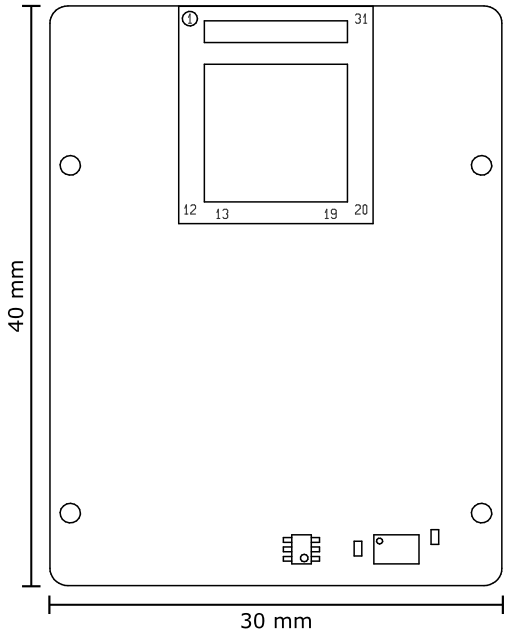

Figure 14.1. BRD4300A Top View

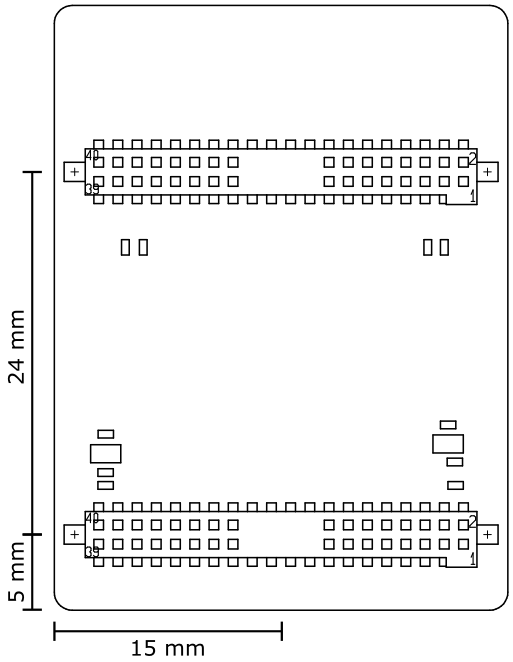

Figure 14.2. BRD4300A Bottom View

15. Schematics, Assembly Drawings and BOM

Schematics, assembly drawings and bill of materials (BOM) are available through Simplicity Studio when the kit documentation package has been installed.

16. Radio Board Revision History and Errata

16.1 Revision History

Radio Board revision is printed on the backside of the BRD4300A Radio Board.

Table 16.1. BRD4300A Revision History

Radio Board Revision	Released	Description
A03	2016-07-04	Updated BGM111 module revision from V1.1 to V2
A02	2016-03-28	Updated BGM111 module revision from V1 to V1.1.
A01	2015-07-01	Updated BGM111 module to first release version.
A00	2015-05-22	Pre-production series with early version of BGM111. This version does not have full RF performance.

16.2 Errata

Table 16.2. BRD4300A Errata

Radio Board Revision	Problem	Description
A01	RF performance.	Reduced RF performance.
A00	RF performance	RF range reduced due to sub-optimal antenna matching on the BGM111 module.

17. Kit Revision History and Errata

The kit revision can be found printed on the kit packaging label, as outlined in the figure below.

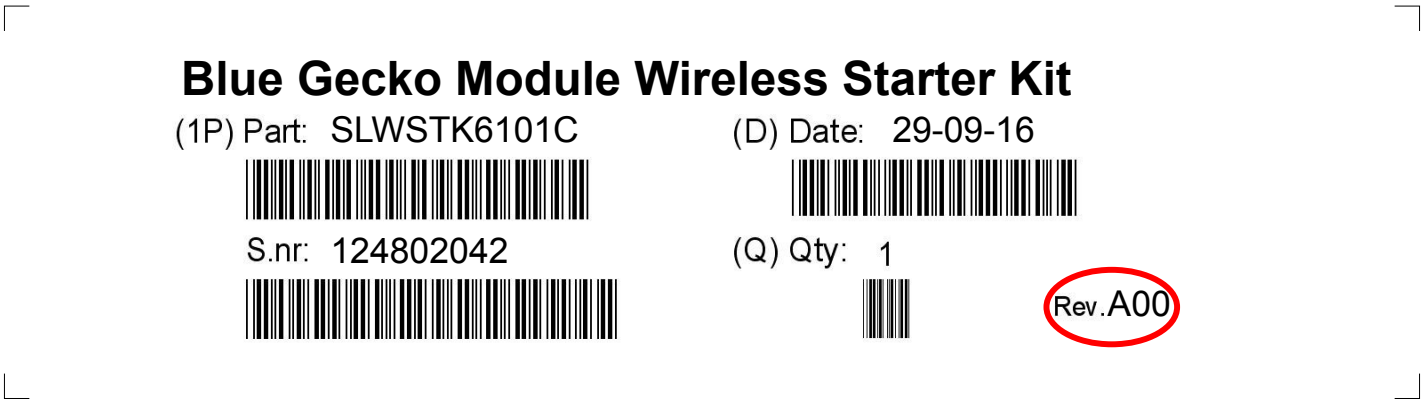

Figure 17.1. Kit Label

17.1 SLWSTK6101A Revision history

Kit Revision	Released	Description
A01	2015-07-01	Updated BRD4300A from revision A00 to revision A01.
A00	2015-06-17	Initial kit release.

17.2 SLWSTK6101B Revision History

Kit Revision	Released	Description
A01	2016-07-06	Updated BRD4300A to revision A03.
A00	2016-04-13	Initial kit release. Replaces SLWSTK6101A. Adds BGM113 Bluetooth Module Radio Board to kit.

17.3 SLWSTK6101C Revision history

Kit Revision	Released	Description
A00	2016-09-29	Initial kit release. Replaces SLWSTK6101B. Adds BGM121 Bluetooth System-in-Package Radio Board to kit and removes BGM113 Bluetooth Module Radio Board.

17.4 SLWRB4300A Revision history

Kit Revision	Released	Description
A01	2016-08-16	Updated BRD4300A to from revision A02 to revision A03.
A00	2016-02-01	Initial release.

18. Document Revision History

Revision 3.00

2016-10-19

Added sections for ordering information, mechanical drawings and radio board connector pin-out, deprecating the BRD4300A Reference Manual.

Added kit revision A01 to revision history.

Smart removed from Bluetooth Smart for consistenty.

Simplicity Studio added to front page features.

Revision 2.00

2016-03-28

Updated document to reflect transition to SLWSTK6101B.

Added chapter on EXP board included in kit.

Revision 1.00

2015-09-30

Corrected pinout for buttons/leds and I2C bus.

Revision 0.90

2015-06-30

Initial version.

Table of Contents

1. Introduction . . . 1

1.1 Radio Boards . . . 1

1.2 Ordering Information . . . 2

1.3 Getting Started . . . 2

2. Kit Hardware Overview . . . 3

3. Kit Block Diagram . . . 4

4. Connectors . . . 5

4.1 Breakout Pads . . . 5

4.2 Expansion Header . . . 6

4.2.1 Expansion Header Pin-out . . . 7

4.3 Debug Connector . . . 8

4.4 Simplicity Connector . . . 9

5. Power Supply and Reset . . . 10

5.1 Radio Board Power Selection . . . 10

5.2 Board Controller Power . . . 11

5.3 BGM111 Reset . . . 11

6. Peripherals . . . 12

6.1 Push Buttons and LEDs . . . 12

6.2 Memory LCD-TFT Display . . . 13

6.3 Si7021 Relative Humidity and Temperature Sensor . . . 14

6.4 Virtual COM Port . . . 15

7. Board Controller . . . 16

7.1 Admin Console . . . 16

8. Expansion Board . . . 18

8.1 Accelerometer . . . 18

8.2 Push Buttons and LEDs . . . 19

8.3 Joystick . . . 19

9. Advanced Energy Monitor . . . 20

9.1 Introduction . . . 20

9.2 Theory of Operation . . . 20

9.3 AEM Accuracy and Performance . . . 21

9.4 Usage . . . 21

10. On-Board Debugger . . . 22

10.1 Host Interfaces . . . 22

10.2 Debug Modes . . . 23

10.3 Debugging During Battery Operation 24

11. Device Connectivity 25

11.1 Virtual COM Port 25

12. Kit Manager and Upgrades 26

12.1 Kit Manager Operation 26

12.2 Firmware Upgrades 26

13. Radio Board Connectors 27

13.1 Radio Board Connector Pin Mapping. 27

14. Mechanical Details 28

15. Schematics, Assembly Drawings and BOM 29

16. Radio Board Revision History and Errata 30

16.1 Revision History. 30

16.2 Errata 30

17. Kit Revision History and Errata 31

17.1 SLWSTK6101A Revision history 31

17.2 SLWSTK6101B Revision History 31

17.3 SLWSTK6101C Revision history 31

17.4 SLWRB4300A Revision history. 31

18. Document Revision History 32

Table of Contents 33

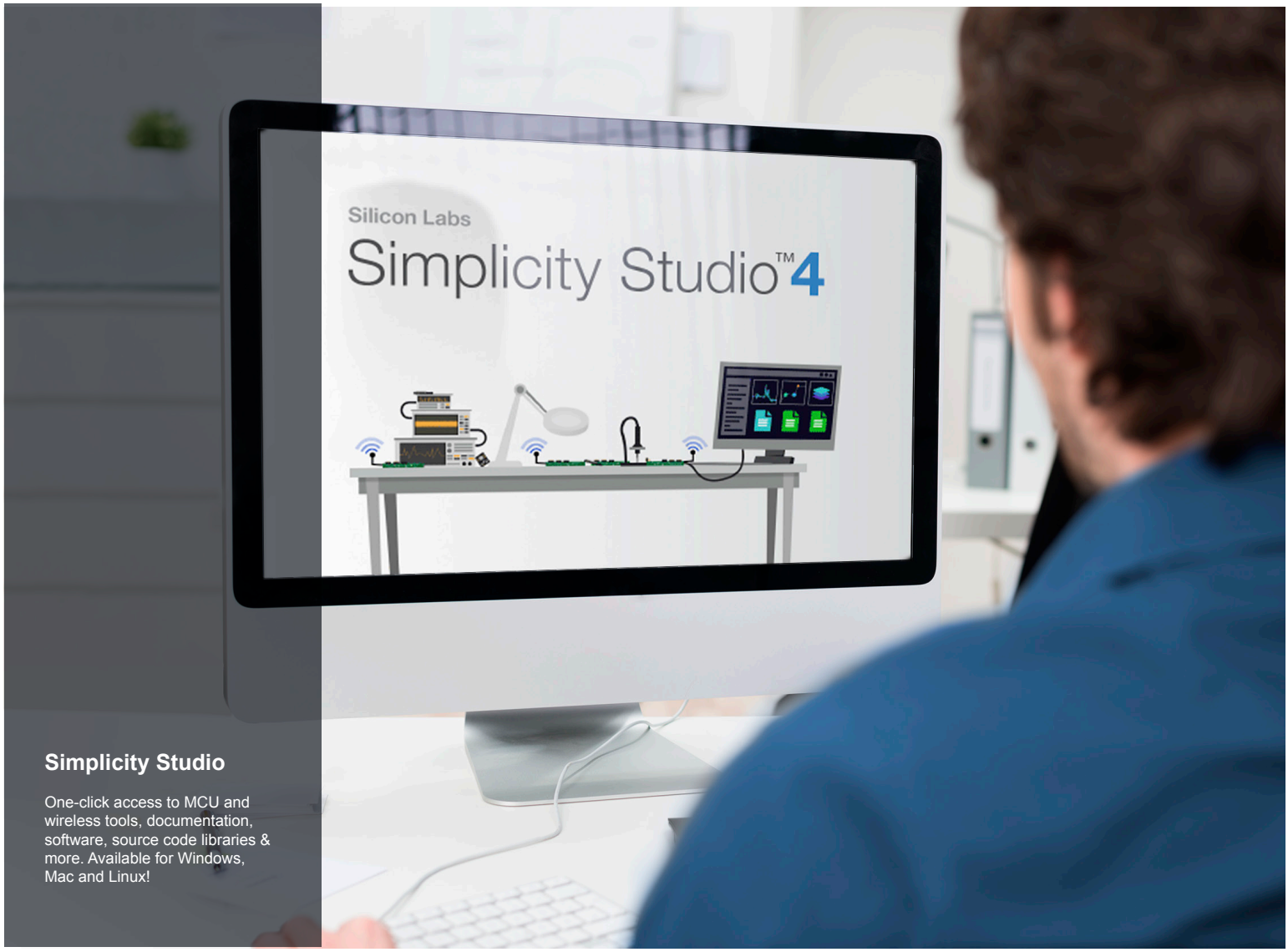

Simplicity Studio

One-click access to MCU and wireless tools, documentation, software, source code libraries & more. Available for Windows, Mac and Linux!

IoT Portfolio
www.silabs.com/IoT

SW/HW
www.silabs.com/simplicity

Quality
www.silabs.com/quality

Support and Community
community.silabs.com

Disclaimer
Silicon Labs intends to provide customers with the latest, accurate, and in-depth documentation of all peripherals and modules available for system and software implementers using or intending to use the Silicon Labs products. Characterization data, available modules and peripherals, memory sizes and memory addresses refer to each specific device, and "Typical" parameters provided can and do vary in different applications. Application examples described herein are for illustrative purposes only. Silicon Labs reserves the right to make changes without further notice and limitation to product information, specifications, and descriptions herein, and does not give warranties as to the accuracy or completeness of the included information. Silicon Labs shall have no liability for the consequences of use of the information supplied herein. This document does not imply or express copyright licenses granted hereunder to design or fabricate any integrated circuits. The products are not designed or authorized to be used within any Life Support System without the specific written consent of Silicon Labs. A "Life Support System" is any product or system intended to support or sustain life and/or health, which, if it fails, can be reasonably expected to result in significant personal injury or death. Silicon Labs products are not designed or authorized for military applications. Silicon Labs products shall under no circumstances be used in weapons of mass destruction including (but not limited to) nuclear, biological or chemical weapons, or missiles capable of delivering such weapons.

Trademark Information
Silicon Laboratories Inc.® , Silicon Laboratories®, Silicon Labs®, SiLabs® and the Silicon Labs logo®, Bluegiga®, Bluegiga Logo®, Clockbuilder®, CMEMS®, DSPLL®, EFM®, EFM32®, EFR, Ember®, Energy Micro, Energy Micro logo and combinations thereof, "the world's most energy friendly microcontrollers", Ember®, EZLink®, EZRadio®, EZRadioPRO®, Gecko®, ISOmodem®, Precision32®, ProSLIC®, Simplicity Studio®, SiPHY®, Telegesis, the Telegesis Logo®, USBXpress® and others are trademarks or registered trademarks of Silicon Labs. ARM, CORTEX, Cortex-M3 and THUMB are trademarks or registered trademarks of ARM Holdings. Keil is a registered trademark of ARM Limited. All other products or brand names mentioned herein are trademarks of their respective holders.

SILICON LABS

Silicon Laboratories Inc.
400 West Cesar Chavez
Austin, TX 78701
USA

http://www.silabs.com