High efficiency 48-MHz ARM® Cortex®-M4 microcontroller, up to 1-MB code flash memory, 192-KB SRAM, Segment LCD Controller, Capacitive Touch Sensing Unit, USB 2.0 Full-Speed, 14-Bit A/D Converter, 12-Bit D/A Converter, security and safety features.

Features

■ ARM Cortex-M4 Core with Floating Point Unit (FPU)
- ARMv7E-M architecture with DSP instruction set
- Maximum operating frequency: 48 MHz
- Support for 4-GB address space
- ARM Memory Protection Unit (MPU) with 8 regions
- Debug and Trace: ITM, DWT, FPB, TPIU, ETB
- CoreSight™ debug port: JTAG-DP and SW-DP

■ Memory
- Up to 1-MB code flash memory
- 16-KB data flash memory (up to 100,000 erase/write cycles)
- Up to 192-KB SRAM
- Flash Cache (FCACHE)
- Memory Protection Units
- Memory Mirror Function
- 128-bit unique ID

■ Connectivity
- USB 2.0 Full-Speed Module (USBFS)
  - On-chip transceiver with voltage regulator
  - Compliant with USB Battery Charging Specification 1.2
- Serial Communications Interface (SCI) × 6
  - UART
  - Simple IIC
  - Simple SPI
- Serial Peripheral Interface (SPI) × 2
- I^2C bus interface (IIC) × 3
- CAN module (CAN)
- Serial Sound Interface (SSI) × 2
- SD/MMC Host Interface (SDHI)
- Quad Serial Peripheral Interface (QSPI)
- IrDA interface
- External memory bus
  - 8- and 16-bit address width

■ Analog
- 14-Bit A/D Converter (ADC14)
- 12-Bit D/A Converter (DAC12) × 2
- High-Speed Analog Comparator (ACMPHS) × 2
- Low-Power Analog Comparator (ACMPLP) × 2
- Operational Amplifier (OPAMP) × 4
- Temperature Sensor (TSN)

■ Timers
- General PWM Timer 32-Bit (GPT32) × 10
- Asynchronous General-Purpose Timer (AGT) × 2
  - VBATT support
- Watchdog Timer (WDT)

■ Safety
- ECC in SRAM
- SRAM parity error check
- Flash area protection
- ADC self-diagnosis function
- Clock Frequency Accuracy Measurement Circuit (CAC)
- Cyclic Redundancy Check (CRC) calculator
- Data Operation Circuit (DOC)
- Port Output Enable for GPT (POEG)
- Independent Watchdog Timer (IWDT)
- GPIO readback level detection
- Register write protection
- Main oscillator stop detection
- Illegal memory access

■ System and Power Management
- Low-power modes
- Realtime Clock (RTC) with calendar and VBATT support
- Event Link Controller (ELC)
- DMA Controller (DMAC) × 4
- Data Transfer Controller (DTC)
- Key Interrupt Function (KINT)
- Power-on reset
- Low voltage detection with voltage settings

■ Security and Encryption
- AES128/256
- GHASH
- True Random Number Generator (TRNG)

■ Human Machine Interface (HMI)
- Segment LCD Controller (SLCDC)
  - Up to 52 segments × 4 commons
  - Up to 48 segments × 8 commons
- Capacitive Touch Sensing Unit (CTSU)

■ Multiple Clock Sources
- Main clock oscillator (MOSC)
  (1 to 20 MHz when VCC = 2.4 to 5.5 V)
  (1 to 8 MHz when VCC = 1.8 to 2.4 V)
  (1 to 4 MHz when VCC = 1.6 to 1.8 V)
- Sub-clock oscillator (SOSC) (32.768 kHz)
- High-speed on-chip oscillator (HOCO)
  (24, 32, 48, 64 MHz when VCC = 2.4 to 5.5 V)
  (24, 32, 48 MHz when VCC = 1.8 to 5.5 V)
  (24, 32 MHz when VCC = 1.6 to 5.5 V)
- Middle-speed on-chip oscillator (MOCO) (8 MHz)
- Low-speed on-chip oscillator (LOCO) (32.768 kHz)
- Independent watchdog timer OCO (15 kHz)
- Clock trim function for HOCO/MOCO/LOCO
- Clock out support

■ General Purpose I/O Ports
- Up to 124 input/output pins
  - Up to 3 CMOS input
  - Up to 121 CMOS input/output
    - Up to 10 5-V tolerant input/output (when VCC = 3.6 V)
    - Up to 2 pins high current (20 mA)

■ Operating Voltage
- VCC: 1.6 to 5.5 V

■ Operating Temperature and Packages
- Ta = –40°C to +85°C
  - 145-pin LGA(7 mm × 7 mm, 0.5 mm pitch)
  - 121-pin BGA (8 mm × 8 mm, 0.65 mm pitch)
  - 100-pin LGA (7 mm × 7 mm, 0.65 mm pitch)
- Ta = –40°C to +105°C
  - 144-pin LQFP (20 mm × 20 mm, 0.5 mm pitch)
  - 100-pin LQFP (14 mm × 14 mm, 0.5 mm pitch)
  - 64-pin LQFP (10 mm × 10 mm, 0.5 mm pitch)
  - 64-pin QFN (8 mm × 8 mm, 0.4 mm pitch)

1. Overview

The S3A7 MCU comprises multiple series of software- and pin-compatible ARM-based 32-bit MCUs that share a common set of Renesas peripherals to facilitate design scalability and efficient platform-based product development.

This MCU provides an optimal combination of low-power, high-performance ARM® Cortex®-M4 core running up to 48 MHz with the following features:

- Up to 1-MB code flash memory
- 192-KB SRAM
- Segment LCD Controller (SLCDC)
- Capacitive Touch Sensing Unit (CTSU)
- USB 2.0 Full-Speed Module (USBFS)
- 14-bit ADC
- 12-bit DAC
- Security features.

1.1 Function Outline

Table 1.1 ARM core

Feature	Functional description
ARM Cortex-M4	• Maximum operating frequency: up to 48 MHz • ARM Cortex-M4: - Revision: r0p1-01rel0 - ARMv7E-M architecture profile - Single Precision Floating Point Unit compliant with the ANSI/IEEE Std 754-2008 • ARM Memory Protection Unit (MPU): - ARMv7 Protected Memory System Architecture - 8 protect regions • SysTick timer: - Driven by LOCO clock

Table 1.2 Memory

Feature	Functional description
Code flash memory	Maximum 1 MB code flash memory. See section 48, Flash Memory in User's Manual.
Data flash memory	16 KB data flash memory. See section 48, Flash Memory in User's Manual.
Option-Setting Memory	The Option-Setting Memory determines the state of the MCU after a reset. See section 7, Option-Setting Memory in User's Manual.
Memory Mirror Function (MMF)	The MMF can be configured to mirror the desired application image load address in code flash memory to the application image link address in the unused memory 23-bit space (memory mirror space addresses). The user application code is developed and linked to run from this MMF destination address. The user application code does not need to know the load location where it is stored in code flash memory. See section 5, Memory Mirror Function (MMF) in User's Manual.
SRAM	This MCU has an on-chip high-speed SRAM with either parity-bit or Error Correction Code (ECC). There is an area in SRAM0 that provides error correction capability using ECC. See section 47, SRAM in User's Manual.

Table 1.3 System (1/2)

Feature	Functional description
Operating mode	Two operating modes: - Single-chip mode - SCI/USB boot mode. See section 3, Operating Modes in User's Manual.
Reset	This MCU has 14 types of resets: • RES pin reset • Power-on reset • VBATT selected voltage power on reset • Independent watchdog timer reset • Watchdog timer reset • Voltage monitor 0 reset • Voltage monitor 1 reset • Voltage monitor 2 reset • SRAM parity error reset • SRAM ECC error reset • Bus master MPU error reset • Bus slave MPU error reset • Stack pointer error reset • Software reset. See section 6, Resets in User's Manual.
Low Voltage Detection (LVD)	The Low Voltage Detection (LVD) monitors the voltage level input to the VCC pin, and the detection level can be selected using a software program. See section 8, Low Voltage Detection (LVD) in User's Manual.
Clock	• Main clock oscillator (MOSC) • Sub-clock oscillator (SOSC) • High-speed on-chip oscillator (HOCO) • Middle-speed on-chip oscillator (MOCO) • Low-speed on-chip oscillator (LOCO) • PLL frequency synthesizer • Independent Watchdog Timer on-chip oscillator • Clock out support. See section 9, Clock Generation Circuit in User's Manual.
Clock Frequency Accuracy Measurement Circuit (CAC)	The Clock Frequency Accuracy Measurement Circuit (CAC) is used to check the system clock frequency with a reference clock signal by counting the number of pulses of the system clock to be measured. The reference clock can be provided externally through a CACREF pin or internally from various on-chip oscillators. Event signals can be generated when the clock does not match or measurement ends. This feature is particularly useful in implementing a fail-safe mechanism for home and industrial automation applications. See section 10, Clock Frequency Accuracy Measurement Circuit (CAC) in User's Manual.
Low Power Mode	This MCU has several functions for reducing power consumption, such as setting clock dividers, controlling EBCLK output, stopping modules, selecting power control mode in normal operation, and transitioning to low power modes. See section 11, Low Power Mode in User's Manual.
Battery Backup Function	This MCU has a battery backup function that can be partly powered by a battery. The battery powered area includes RTC/AGT/SOSC/LOCO/Wakeup Control/Backup Memory/VBATT_R Low Voltage Detection/Switch between VCC/VBATT. During normal operation, the battery powered area is powered by the main power supply which is the VCC pin. When a VCC voltage drop is detected, the power source is switched to the dedicated battery backup power pin, the VBATT pin. When the voltage rises again, the power source is switched from the VBATT pin to the VCC pin. See section 12, Battery Backup Function in User's Manual.
Register Write Protection	The Register Write Protection function protects important registers from being overwritten due to software errors. See section 13, Register Write Protection in User's Manual.
Memory Protection Unit (MPU)	This MCU incorporates two memory protection units and provide a CPU stack pointer monitor function. See section 16, Memory Protection Unit (MPU) in User's Manual.

Table 1.3 System (2/2)

Feature	Functional description
Watchdog Timer (WDT)	The Watchdog Timer (WDT) is a 14-bit down-counter. It can be used to reset this MCU when the counter underflows because the system has run out of control and is unable to refresh the WDT. In addition, a non-maskable interrupt or interrupt can be generated by an underflow. The refresh-permitted period can be set to refresh the counter and used as the condition to detect when the system runs out of control. See section 26, Watchdog Timer (WDT) in User's Manual.
Independent Watchdog Timer (IWDT)	The independent watchdog timer (IWDT) consists of a 14-bit down-counter that must be serviced periodically to prevent counter underflow. The IWDT provides functionality to reset this MCU or to generate a non-maskable interrupt/interrupt for a timer underflow. Because the timer operates using an independent, dedicated clock source, it is particularly useful in returning this MCU to a known state as a fail safe mechanism when the system runs out of control. The watchdog timer can be triggered automatically on reset, underflow, or refresh error, or by a refresh of the count value in the registers. See section 27, Independent Watchdog Timer (IWDT) in User's Manual.

Table 1.4 Interrupt control

Feature	Functional description
Interrupt Controller Unit (ICU)	The Interrupt Controller Unit (ICU) controls which event signals are linked to the NVIC/DTC module and DMAC module. The ICU also controls NMI interrupts. See section 14, Interrupt Controller Unit (ICU) in User's Manual.

Table 1.5 Event link

Feature	Functional description
Event Link Controller (ELC)	The Event Link Controller (ELC) uses the interrupt requests generated by various peripheral modules as event signals to connect them to different modules, enabling direct interaction between the modules without CPU intervention. See section 19, Event Link Controller (ELC) in User's Manual.

Table 1.6 Direct memory access

Feature	Functional description
Data Transfer Controller (DTC)	This MCU incorporates a Data Transfer Controller (DTC) that performs data transfers when activated by an interrupt request. See section 18, Data Transfer Controller (DTC) in User's Manual.
DMA Controller (DMAC)	This MCU incorporates an 4-channel DMA Controller (DMAC) module that can transfer data without the CPU. When a DMA transfer request is generated, the DMAC transfers data stored at the transfer source address to the transfer destination address. See section 17, DMA Controller (DMAC) in User's Manual.

Table 1.7 External bus interface

Feature	Functional description
External bus	• CS area: Connected to the external devices (external memory interface) • QSPI area: Connected to the QSPI (external device interface)

Table 1.8 Timers

Feature	Functional description
General PWM Timer (GPT)	The General PWM Timer (GPT) is a 32-bit timer with 10 channels. PWM waveforms can be generated by controlling the up-counter, down-counter, or the up- and down-counter. In addition, PWM waveforms for controlling brushless DC motors can be generated. The GPT can also be used as a general-purpose timer. See section 23, General PWM Timer (GPT) in User's Manual.
Port Output Enable for GPT (POEG)	Use the Port Output Enable for GPT (POEG) function to place the General PWM Timer (GPT) output pins in the output disable state. See section 22, Port Output Enable for GPT (POEG) in User's Manual.
Asynchronous General Purpose Timer (AGT)	The Asynchronous General Purpose Timer (AGT) is a 16-bit timer that can be used for pulse output, external pulse width or period measurement, and counting external events. This 16-bit timer consists of a reload register and a down-counter. The reload register and the down-counter are allocated to the same address, and they can be accessed with the AGT register. See section 24, Asynchronous General Purpose Timer (AGT) in User's Manual.
Realtime Clock (RTC)	The Realtime Clock (RTC) has two counting modes, calendar count mode and binary count mode, that are used by switching register settings. For calendar count mode, the RTC has a 100-year calendar from 2000 to 2099 and automatically adjusts dates for leap years. For binary count mode, the RTC counts seconds and retains the information as a serial value. Binary count mode can be used for calendars other than the Gregorian (Western) calendar. See section 25, Realtime Clock (RTC) in User's Manual.

Table 1.9 Communication interfaces (1/2)

Feature	Functional description
Serial Communications Interface (SCI)	The Serial Communication Interface (SCI) is configurable to five asynchronous and synchronous serial interfaces: • Asynchronous interfaces (UART and asynchronous communications interface adapter (ACIA)) • 8-bit clock synchronous interface • Simple IIC (master-only) • Simple SPI • Smart card interface. The smart card interface complies with the ISO/IEC 7816-3 standard for electronic signals and transmission protocol. Each SCI has FIFO buffers to enable continuous and full-duplex communication, and the data transfer speed can be configured independently using an on-chip baud rate generator. See section 29, Serial Communications Interface (SCI) in User's Manual.
IrDA Interface (IrDA)	The IrDA interface sends and receives IrDA data communication waveforms in cooperation with the SCI1 based on the IrDA (Infrared Data Association) standard 1.0. See section 30, IrDA Interface in User's Manual.
I^2C Bus Interface (IIC)	This MCU has a three-channel I^2C bus interface (IIC). The IIC module conforms with and provides a subset of the NXP I^2C bus (Inter-Integrated Circuit bus) interface functions. See section 31, I^2C Bus Interface (IIC) in User's Manual.
Serial Peripheral Interface (SPI)	This MCU includes two independent channels of the Serial Peripheral Interface (SPI). The SPI channels are capable of high-speed, full-duplex synchronous serial communications with multiple processors and peripheral devices. See section 33, Serial Peripheral Interface (SPI) in User's Manual.
Serial Sound Interface (SSI)	The Serial Sound Interface (SSI) peripheral provides functionality to interface digital audio devices for transmitting PCM audio data over a serial bus with this MCU. The SSI supports an audio clock frequency of up to 50 MHz, and can be operated as a slave or master receiver/transmitter/transceiver to suit various applications. The SSI includes 8-stage FIFO buffers in the receiver and transmitter, and supports interrupts and DMA-driven data reception and transmission. See section 36, Serial Sound Interface (SSI) in User's Manual.
Quad Serial Peripheral Interface (QSPI)	The QSPI is a memory controller for connecting a serial ROM (nonvolatile memory such as a serial flash memory, serial EEPROM, or serial FeRAM) that has an SPI-compatible interface. See section 34, Quad Serial Peripheral Interface (QSPI) in User's Manual.

Table 1.9 Communication interfaces (2/2)

Feature	Functional description
Controller Area Network (CAN) Module	The Controller Area Network (CAN) module provides functionality to receive and transmit data using a message-based protocol between multiple slaves and masters in electromagnetically noisy applications. The CAN module complies with the ISO 11898-1 (CAN 2.0A/CAN 2.0B) standard and supports up to 32 mailboxes, which can be configured for transmission or reception in normal mailbox and FIFO modes. Both standard (11-bit) and extended (29-bit) messaging formats are supported. See section 32, Controller Area Network (CAN) Module in User's Manual.
USB 2.0 Full-Speed Module (USBFS)	This MCU incorporates a USB 2.0 Full-Speed module (USBFS). The USBFS is a USB controller that is equipped to operate as a host controller or function controller. The module supports full-speed and low-speed (only for the host controller) transfer as defined in the Universal Serial Bus Specification 2.0. The module has an internal USB transceiver and supports all of the transfer types defined in the Universal Serial Bus Specification 2.0. The USB has buffer memory for data transfer, providing a maximum of 10 pipes. PIPE1 to PIPE9 can be assigned any endpoint number based on the peripheral devices used for communication or based on the user system. This MCU supports revision 1.2 of the battery charging specification. Because this MCU can be powered at 5 V, the USB LDO regulator provides the internal USB transceiver power supply 3.3 V. See section 28, USB 2.0 Full-Speed Module (USBFS) in User's Manual.
SD/MMC Host Interface (SDHI)	The Secure Digital Host Interface (SDHI) and MultiMediaCard (MMC) interface provide the functionality needed to connect a variety of external memory cards with this MCU. The SDHI supports both 1-bit and 4-bit buses for connecting different memory cards that support SD, SDHC, and SDXC formats. When developing host devices that are compliant with the SD Specifications, you must comply with the SD Host/Ancillary Product License Agreement (SD HALA). The MMC interface supports 1-bit, 4-bit, and 8-bit MMC buses that provide eMMC 4.51 (JEDEC Standard JESD 84-B451) device access. This interface also provides backward compatibility and supports for high-speed SDR transfer modes. See section 37, SD/MMC Host Interface (SDHI) in User's Manual.

Table 1.10 Analog (1/2)

Feature	Functional description
14-bit A/D Converter (ADC14)	This MCU incorporates up to one unit of a 14-bit successive approximation A/D converter. Up to 28 analog input channels are selectable. Temperature sensor output and internal reference voltage are selectable for conversion. The A/D conversion accuracy is selectable from 12-bit and 14-bit conversion making it possible to optimize the tradeoff between speed and resolution in generating a digital value. See section 39, 14-Bit A/D Converter (ADC14) in User's Manual.
12-bit D/A Converter (DAC12)	This MCU includes a 12-bit D/A converter with an output amplifier. See section 40, 12-Bit D/A Converter (DAC12) in User's Manual.
Temperature Sensor (TSN)	The on-chip temperature sensor can be used to determine and monitor the die temperature for reliable operation of the device. The sensor outputs a voltage directly proportional to the die temperature, and the relationship between the die temperature and the output voltage is linear. The output voltage is provided to the ADC for conversion and can be further used by the end application. See section 41, Temperature Sensor (TSN) in User's Manual.
High-Speed Analog Comparator (ACMPHS)	Analog comparators can be used to compare a test voltage with a reference voltage and to provide a digital output based on the result of conversion. Both the test voltage and the reference voltage can be provided to the comparator from internal sources such as D/A converter output and internal reference voltage, and an external source. Such flexibility is useful in applications that require go/no-go comparisons to be performed between analog signals without necessarily requiring A/D conversion. See section 43, High-Speed Analog Comparator (ACMPHS) in User's Manual.
Low-Power Analog Comparator (ACMPLP)	Analog comparators can be used to compare a reference input voltage and analog input voltage. The comparison result can be read by software and also be output externally. The reference input voltage can be selected from either an input to the CMPREFi (i = 0, 1) pin or from the internal reference voltage (Vref) generated internally in this MCU. The ACMPLP response speed can be set before starting an operation. Setting high-speed mode decreases the response delay time, but increases current consumption. Setting low-speed mode increases the response delay time, but decreases current consumption. See section 44, Low-Power Analog Comparator (ACMPLP) in User's Manual.

Table 1.10 Analog (2/2)

Feature	Functional description
Operational Amplifier (OPAMP)	Operational amplifiers can be used to amplify small analog input voltages and output the amplified voltages. This MCU has a total of four differential operational amplifier units with two input pins and one output pin. See section 42, Operational Amplifier (OPAMP) in User's Manual.

Table 1.11 Human machine interfaces

Feature	Functional description
Segment LCD Controller (SLCDC)	The SLCDC provides the following functions: • Waveform A or B selectable • The LCD driver voltage generator can switch between internal voltage boosting method, capacitor split method, and external resistance division method • Automatic output of segment and common signals based on automatic display data register read • The reference voltage generated when operating the voltage boost circuit can be selected in 16 steps (contrast adjustment) • The LCD can be made to blink. See section 49, Segment LCD Controller/Driver (SLCDC) in User's Manual.
Key Interrupt Function (KINT)	A key interrupt can be generated by setting the Key Return Mode register (KRM) and inputting a rising/falling edge to the key interrupt input pins. See section 21, Key Interrupt Function (KINT) in User's Manual.
Capacitive Touch Sensing Unit (CTSU)	The Capacitive Touch Sensing Unit (CTSU) measures the electrostatic capacitance of the touch sensor. Changes in the electrostatic capacitance are determined by software, which enables the CTSU to detect whether a finger is in contact with the touch sensor. The electrode surface of the touch sensor is usually enclosed with an electrical conductor so that a finger does not come into direct contact with the electrode. See section 45, Capacitive Touch Sensing Unit (CTSU) in User's Manual.

Table 1.12 Data processing

Feature	Functional description
Cyclic Redundancy Check (CRC) Calculator	The Cyclic Redundancy Check (CRC) generates CRC codes to detect errors in the data. The bit order of CRC calculation results can be switched for LSB first or MSB first communication. Additionally, various CRC generation polynomials are available. The snoop function allows monitoring reads from and writes to specific addresses. This function is useful in applications that require CRC code to be generated automatically in certain events, such as monitoring writes to the serial transmit buffer and reads from the serial receive buffer. See section 35, Cyclic Redundancy Check (CRC) Calculator in User's Manual.
Data Operation Circuit (DOC)	The Data Operation Circuit (DOC) is used to compare, add, and subtract 16-bit data. See section 46, Data Operation Circuit (DOC) in User's Manual.

Table 1.13 Security

Feature	Functional description
Secure Crypto Engine 5 (SCE5)	• Security algorithm: - Symmetric algorithm: AES • Other support features: - TRNG (True Random Number Generator) - Hash-value generation: GHASH

1.2 Block Diagram

Figure 1.1 shows the block diagram of this MCU superset. Individual devices within the group may have a subset of the features.

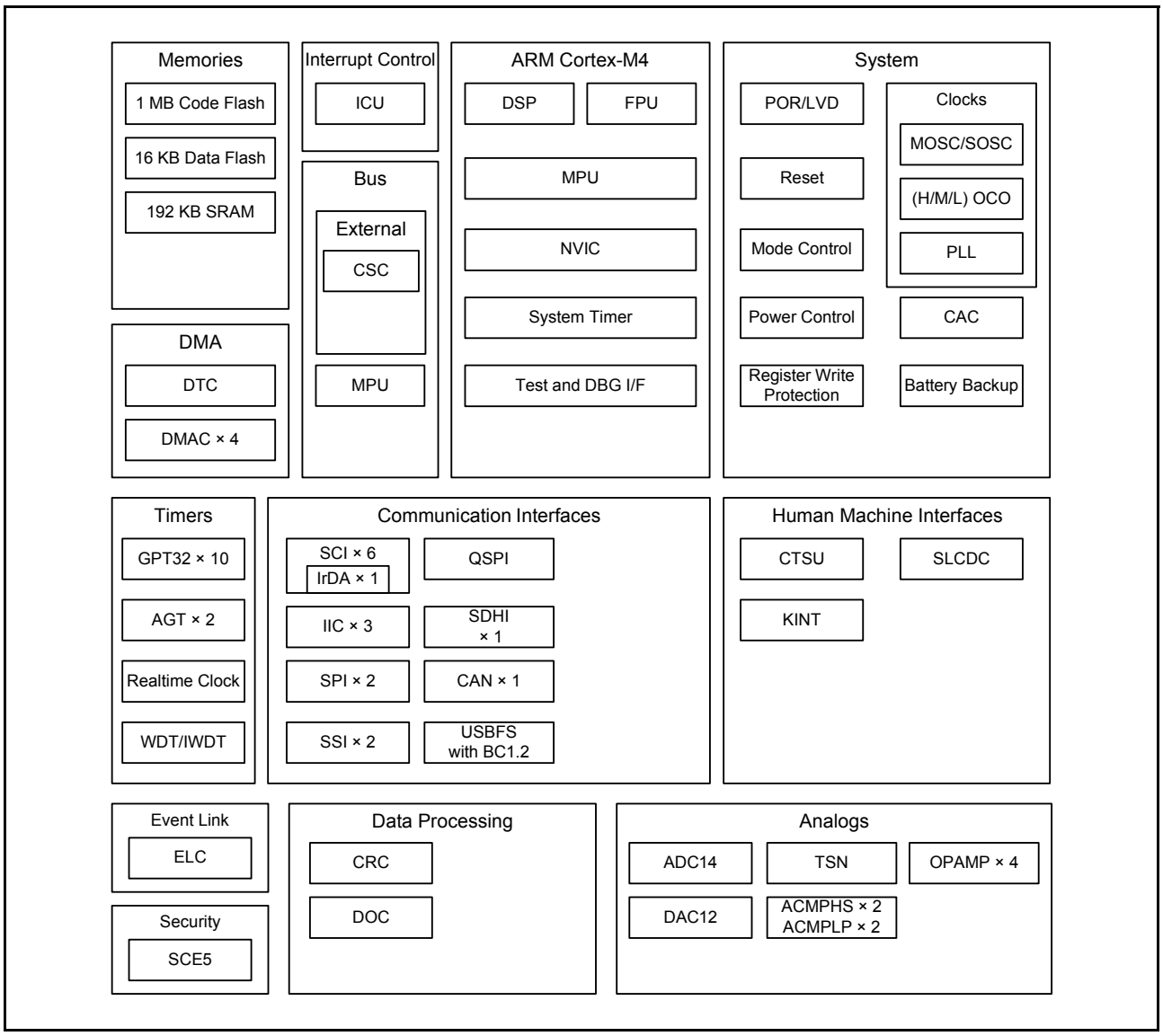

Figure 1.1 Block diagram

1.3 Part Numbering

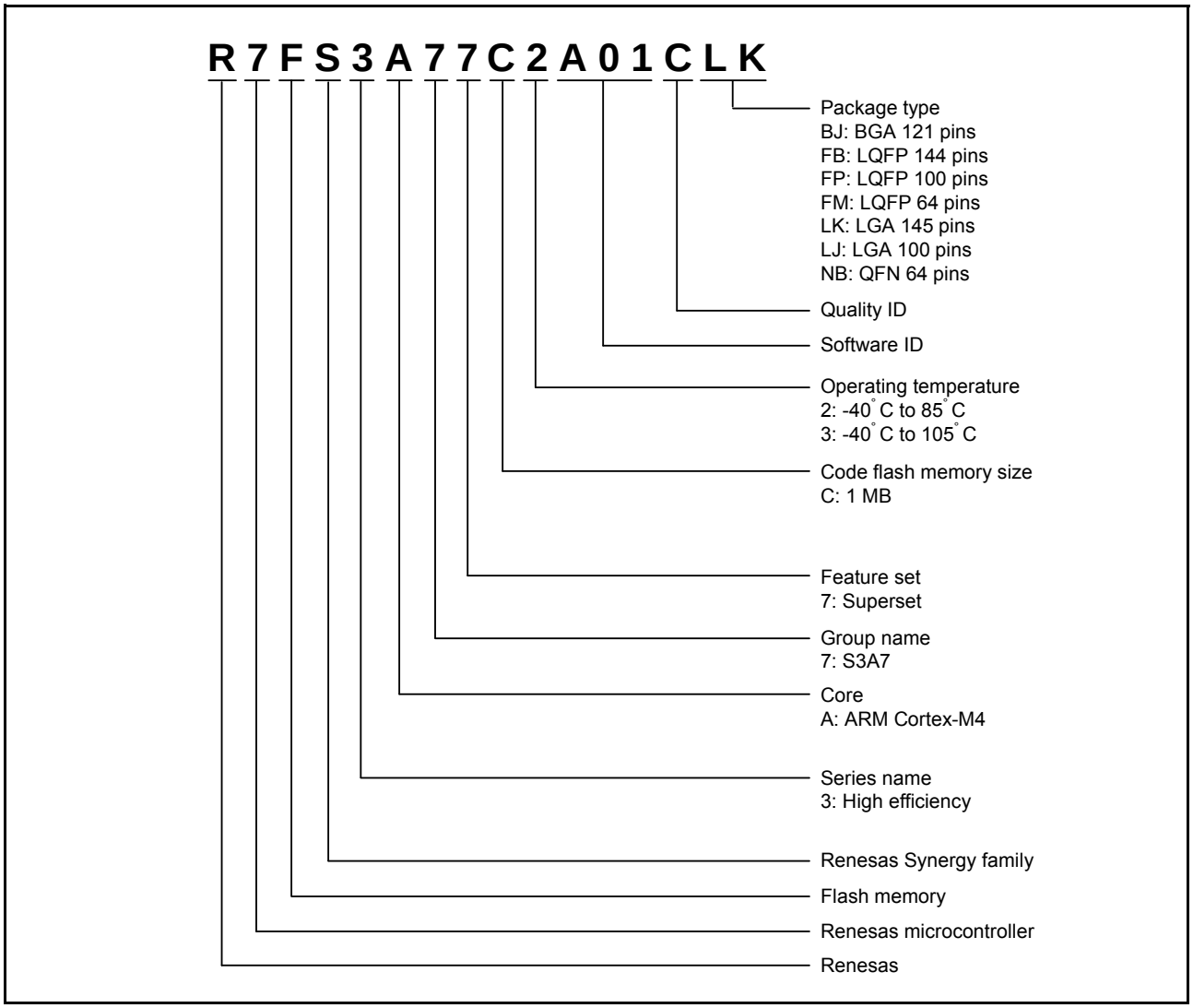

Figure 1.2 Part numbering scheme

1.4 Function Comparison

Table 1.14 Function comparison

Parts number		R7FS3A77C2A01CLK	R7FS3A77C3A01CFB	R7FS3A77C2A01CBJ	R7FS3A77C3A01CFP	R7FS3A77C2A01CLJ	R7FS3A77C3A01CFM/ R7FS3A77C3A01CNB
Pin count		145	144	121	100	100	64
Package		LGA	LQFP	BGA	LQFP	LGA	LQFP/QFN
Code flash memory		1 MB					
Data flash memory		16 KB					
SRAM		192 KB					
	Parity	176 KB					
	ECC	16 KB					
System	CPU clock	48 MHz					
	Backup registers	512 bytes					
Interrupt control	ICU	Yes					
Event control	ELC	Yes					
DMA	DTC	Yes					
	DMAC	4					
BUS	External bus	16-bit bus		8-bit bus			No
Timers	GPT32	10	10	10	10	10	9
	AGT	2	2	2	2	2	2
	RTC	Yes					
	WDT/IWDT	Yes					
Communication	SCI	6					
	IIC	3			2		
	SPI	2					
	SSI	2					1
	QSPI	1					No
	SDHI	1					No
	CAN	1					
	USBFS	Yes					
Analog	ADC14	28		26	25	25	18
	DAC12	2					
	ACMPHS	2					
	ACMPLP	2					
	TSN	Yes					
HMI	SLCDC	4 com × 48 seg and 4 com/seg		4 com × 34 seg and 4 com/seg	4 com × 22 seg and 4 com/seg	4 com × 22 seg and 4 com/seg	No
	CTSU	31			26		14
	KINT	8					
Data processing	CRC	Yes					
	DOC	Yes					
Security		SCE5					

1.5 Pin Functions

Function	Signal	I/O	Description
Power supply	VCC	Input	Power supply pin. Connect it to the system power supply. Connect this pin to VSS by a 0.1-μF capacitor. The capacitor should be placed close to the pin.
	VCL	Input	Connect this pin to the VSS pin by the smoothing capacitor used to stabilize the internal power supply. Place the capacitor close to the pin.
	VSS	Input	Ground pin. Connect it to the system power supply (0 V).
	VBATT	Input	Backup power pin.
Clock	XTAL	Output	Pins for a crystal resonator. An external clock signal can be input through the EXTAL pin.
	EXTAL	Input	
	XCIN	Input	Input/output pins for the sub-clock oscillator. Connect a crystal resonator between XCOUT and XCIN.
	XCOUT	Output	
	EBCLK	Output	Outputs the external bus clock for external devices.
	CLKOUT	Output	Clock output pin.
Operating mode control	MD	Input	Pins for setting the operating mode. The signal levels on these pins must not be changed during operation mode transition at the time of release from the reset state.
System control	RES	Input	Reset signal input pin. This MCU enters the reset state when this signal goes low.
CAC	CACREF	Input	Measurement reference clock input pin.
On-chip debug	TMS	I/O	On-chip emulator or boundary scan pins.
	TDI	Input	
	TCK	Input	
	TDO	Output	
	SWDIO	I/O	Serial Wire debug Data Input/Output pin.
	SWCLK	Input	Serial Wire Clock pin.
	SWO	Output	Serial Wire trace Output pin.
External bus interface	RD	Output	Strobe signal which indicates that reading from the external bus interface space is in progress, active LOW.
	WR	Output	Strobe signal which indicates that writing to the external bus interface space is in progress, in 1-write strobe mode, active LOW.
	WR0, WR1	Output	Strobe signals which indicate that either group of data bus pins (D07 to D00, D15 to D08) is valid in writing to the external bus interface space, in byte strobe mode, active LOW.
	BC0, BC1	Output	Strobe signals which indicate that either group of data bus pins (D07 to D00, D15 to D08) is valid in access to the external bus interface space, in 1-write strobe mode, active LOW.
	WAIT	Input	Input pin for wait request signals in access to the external space, active LOW.
	CS0 to CS3	Output	Select signals for CS areas, active LOW.
	A00 to A16	Output	Address bus.
	D00 to D15	I/O	Data bus.
Interrupt	NMI	Input	Non-maskable interrupt request pin.
	IRQ0 to IRQ15	Input	Maskable interrupt request pins.
Battery Backup	VBATWIO0 to VBATWIO2	I/O	Output wakeup signal for the VBATT wakeup control function. External event input for the VBATT wakeup control function.

Function	Signal	I/O	Description
GPT	GTETRGA, GTETRGB, GTETRGC, GTETRGD	Input	External trigger input pin.
	GTIOC0A to GTIOC9A, GTIOC0B to GTIOC9B	I/O	Input capture, Output capture, or PWM output pin.
	GTIU	Input	Hall sensor input pin U.
	GTIV	Input	Hall sensor input pin V.
	GTIW	Input	Hall sensor input pin W.
	GTOUUP	Output	Three-phase PWM output for BLDC motor control (positive U phase).
	GTOULO	Output	Three-phase PWM output for BLDC motor control (negative U phase).
	GTOVUP	Output	Three-phase PWM output for BLDC motor control (positive V phase).
	GTOVLO	Output	Three-phase PWM output for BLDC motor control (negative V phase).
	GTOWUP	Output	Three-phase PWM output for BLDC motor control (positive W phase).
	GTOWLO	Output	Three-phase PWM output for BLDC motor control (negative W phase).
AGT	AGTEE0, AGTEE1	Input	External event input enable.
	AGTIO0, AGTIO1	I/O	External event input and pulse output.
	AGTO0, AGTO1	Output	Pulse output.
	AGTOA0, AGTOA1	Output	Output compare match A output.
	AGTOB0, AGTOB1	Output	Output compare match B output.
RTC	RTCOUT	Output	Output pin for 1-Hz/64-Hz clock.
	RTCIC0 to RTCIC2	Input	Time capture event input pins.
SCI	SCK0 to SCK4, SCK9	I/O	Input/output pins for the clock (clock synchronous mode).
	RXD0 to RXD4, RXD9	Input	Input pins for received data (asynchronous mode/clock synchronous mode).
	TXD0 to TXD4, TXD9	Output	Output pins for transmitted data (asynchronous mode/clock synchronous mode).
	CTS0_RTS0 to CTS4_RTS4, CTS9_RTS9	I/O	Input/Output pins for controlling the start of transmission and reception (asynchronous mode/clock synchronous mode), active LOW.
	SCL0 to SCL4, SCL9	I/O	Input/output pins for the IIC clock (simple IIC).
	SDA0 to SDA4, SDA9	I/O	Input/output pins for the IIC data (simple IIC).
	SCK0 to SCK4, SCK9	I/O	Input/output pins for the clock (simple SPI).
	MISO0 to MISO4, MISO9	I/O	Input/output pins for slave transmission of data (simple SPI).
	MOSI0 to MOSI4, MOSI9	I/O	Input/output pins for master transmission of data (simple SPI).
	SS0 to SS4, SS9	Input	Slave-select input pins (simple SPI), active LOW.
IIC	SCL0 to SCL2	I/O	Input/output pins for clock.
	SDA0 to SDA2	I/O	Input/output pins for data.
SSI	SSISCK0	I/O	SSI serial bit clock pin.
	SSISCK1		
	SSIWS0	I/O	Word select pins.
	SSIWS1		
	SSITXD0	Output	Serial data output pins.
	SSIRXD0	Input	Serial data input pins.
	SSIDATA1	I/O	Serial data input/output pins.
	AUDIO_CLK	Input	External clock pin for audio (input oversampling clock).

Function	Signal	I/O	Description
SPI	RSPCKA, RSPCKB	I/O	Clock input/output pin.
	MOSIA, MOSIB	I/O	Inputs or outputs data output from the master.
	MISOA, MISOB	I/O	Inputs or outputs data output from the slave.
	SSLA0, SSLB0	I/O	Input or output pin for slave selection.
	SSLA1, SSLA2, SSLA3, SSLB1, SSLB2, SSLB3	Output	Output pin for slave selection.
QSPI	QSPCLK	Output	QSPI clock output pin.
	QSSL	Output	QSPI slave output pin.
	QIO0	I/O	Master transmit data/data 0.
	QIO1	I/O	Master input data/data 1.
	QIO2, QIO3	I/O	Data 2, Data 3.
CAN	CRX0	Input	Receive data.
	CTX0	Output	Transmit data.
USBFS	VSS_USB	Input	Ground pins.
	VCC_USB_LDO	Input	Power supply pin for USB LDO regulator.
	VCC_USB	I/O	Input: Power supply pin for USB transceiver. Output: USB LDO regulator output pin. This pin should be connected to an external capacitor.
	USB_DP	I/O	D+ I/O pin of the USB on-chip transceiver. This pin should be connected to the D+ pin of the USB bus.
	USB_DM	I/O	D– I/O pin of the USB on-chip transceiver. This pin should be connected to the D– pin of the USB bus.
	USB_VBUS	Input	USB cable connection monitor pin. This pin should be connected to VBUS of the USB bus. The VBUS pin status (connected or disconnected) can be detected when the USB module is operating as a function controller.
	USB_EXICEN	Output	Low-power control signal for external power supply (OTG) chip
	USB_VBUSEN	Output	VBUS (5 V) supply enable signal for external power supply chip
	USB_OVRCURA, USB_OVRCURB	Input	External overcurrent detection signals should be connected to these pins. VBUS comparator signals should be connected to these pins when the OTG power supply chip is connected.
	USB_ID	Input	MicroAB connector ID input signal should be connected to this pin during operation in OTG mode.
SDHI	SD0CLK	Output	SD clock output pin.
	SD0CMD	I/O	SD command output, response input signal pin.
	SD0DAT0 to SD0DAT7	I/O	SD data bus pins.
	SD0WP	Input	SD write-protect signal.
Analog power supply	AVCC0	Input	Analog voltage supply pin for the analog. Connect this pin to VCC.
	AVSS0	Input	Analog ground pin. Connect this pin to VSS.
	VREFH0	Input	Analog reference voltage supply pin for the A/D converter. Connect this pin to VCC when not using the A/D converter.
	VREFL0	Input	Analog reference ground pin for the A/D converter. Connect this pin to VSS when not using the A/D converter.
	VREFH	Input	Analog reference voltage supply pin for D/A converter.
	VREFL	Input	Analog reference ground pin for D/A converter.
ADC14	AN000 to AN027	Input	Input pins for the analog signals to be processed by the A/D converter.
	ADTRG0	Input	Input pins for the external trigger signals that start the A/D conversion, active LOW.
DAC12	DA0, DA1	Output	Output pins for the analog signals to be processed by the D/A converter.
Comparator output	VCOUT	Output	Comparator output pin.
ACMPHS	IVREF0 to IVREF5	Input	Reference voltage input pin.
	IVCMP0 to IVCMP5	Input	Analog voltage input pin.
ACMPLP	CMPREF0, CMPREF1	Input	Reference voltage input pin.
	CMPIN0, CMPIN1	Input	Analog voltage input pins.

Function	Signal	I/O	Description
OPAMP	AMP0+ to AMP3+	Input	Analog voltage input pins.
	AMP0- to AMP3-	Input	Analog voltage input pins.
	AMP0O to AMP3O	Output	Analog voltage output pins.
CTSU	TS00, TS01, TS03 to TS22, TS26 to TS27, TS29 to TS35	Input	Capacitive touch detection pins (touch pins).
	TSCAP	-	Secondary power supply pin for the touch driver.
KINT	KR00 to KR07	Input	A key interrupt can be generated by inputting a falling edge to the key interrupt input pins.
I/O ports	P000 to P015	I/O	General-purpose input/output pins.
	P100 to P115	I/O	General-purpose input/output pins.
	P200	Input	General-purpose input pin.
	P201 to P206, P212, P213	I/O	General-purpose input/output pins.
	P214, P215	Input	General-purpose input pins.
	P300 to P315	I/O	General-purpose input/output pins.
	P400 to P415	I/O	General-purpose input/output pins.
	P500 to P507, P511, P512	I/O	General-purpose input/output pins.
	P600 to P606, P608 to P614	I/O	General-purpose input/output pins.
	P700 to P705, P708 to P713	I/O	General-purpose input/output pins.
	P800 to P809	I/O	General-purpose input/output pins.
	P900 to P902	I/O	General-purpose input/output pins.
SLCDC	VL1, VL2, VL3, VL4	I/O	Voltage pin for driving the LCD.
	CAPH, CAPL	I/O	Capacitor connection pin for the LCD controller/driver.
	COM0 to COM7	Output	Common signal output pins for the LCD controller/driver.
	SEG00 to SEG51	Output	Segment signal output pins for the LCD controller/driver.

1.6 Pin Assignments

Figure 1.3 to Figure 1.9 show the pin assignments.

R7FS3A77C2A01CLK

	A	B	C	D	E	F	G	H	J	K	L	M	N	
13	P407	P409	P412	P708	P711	VCC	P212 /EXTAL	P215 /XCIN	VCL	P702	P405	P402	P400	13
12	USB_DM	USB_DP	P410	P414	P710	VSS	P213 /XTAL	P214 /XCOUT	VBATT	P701	P404	P511	VCC	12
11	VCC_ USB	VSS_ USB	VCC_ USB_LDO	P411	P415	P712	P705	P704	P703	P403	P401	P512	VSS	11
10	P205	P206	P204	P408	P413	P709	P713	P700	P406	P003	P000	P002	P001	10
9	P203	P313	P202	P314						P004	P006	P009	P008	9
8	P900	P901	P200	P315						P005	AVSS0	P011 /VREFL0	P010 /VREFH0	8
7	VSS	P902	RES	P310						P007	AVCC0	P013 /VREFL	P012 /VREFH	7
6	VCC	P201/MD	P312	P305						P505	P506	P015	P014	6
5	P309	P311	P308	P303	NC					P503	P504	VSS	VCC	5
4	P307	P306	P304	P109/TDO /SWO	P114	P608	P604	P600	P105	P500	P502	P501	P507	4
3	P808	P809	P301	P112	P115	P610	P614	P603	P107	P106	P104	P803	P802	3
2	P302	P300/TCK /SWCLK	P111	P806	P609	P612	VSS	P605	P601	P805	P800	P101	P801	2
1	P108/TMS /SWDIO	P110/TDI	P113	P807	P611	P613	VCC	P606	P602	P804	P103	P102	P100	1
	A	B	C	D	E	F	G	H	J	K	L	M	N	

Figure 1.3 Pin assignment for LGA 145-pin (Upper perspective view)

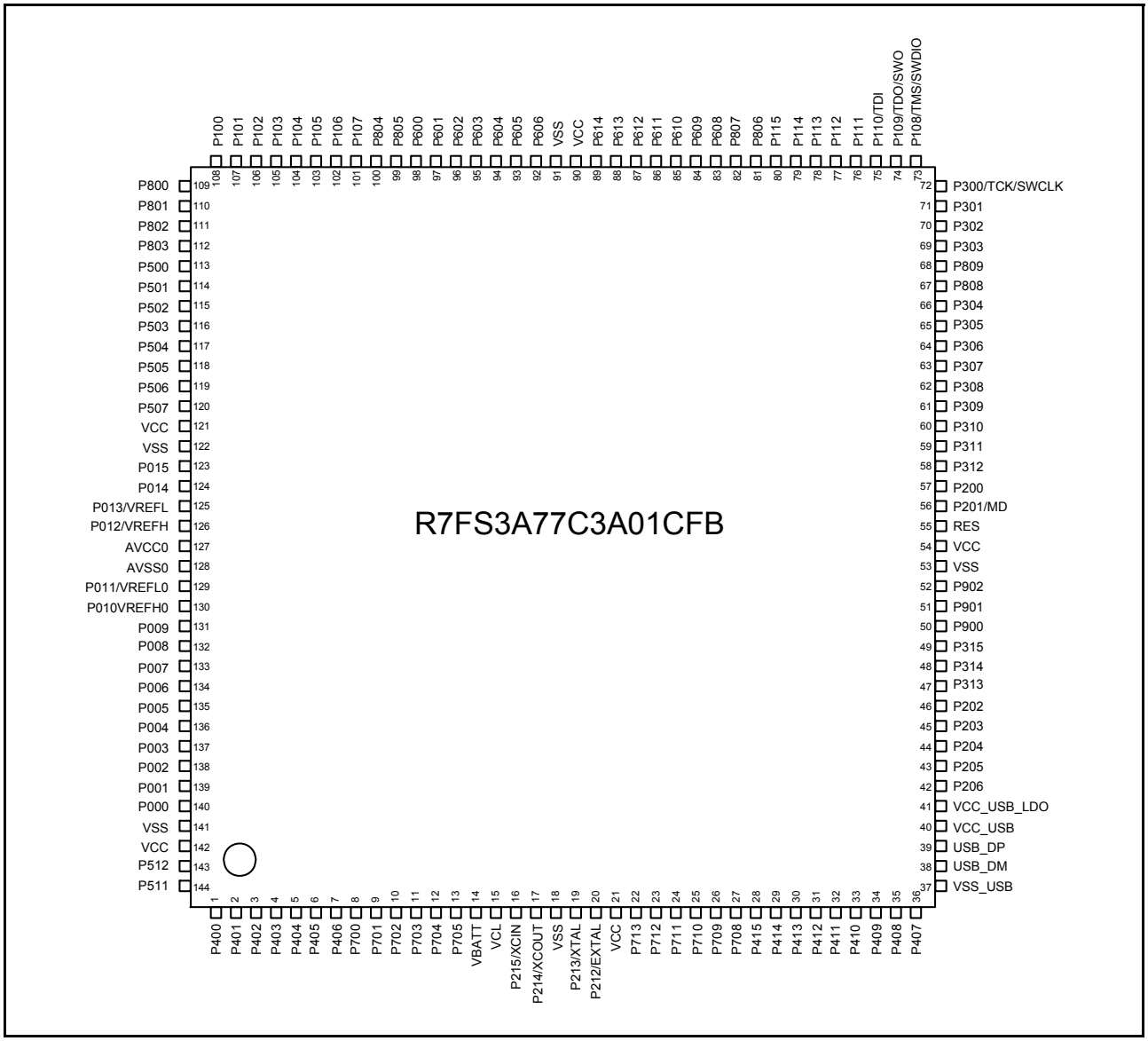

Figure 1.4 Pin assignment for LQFP 144-pin (Top view)

R7FS3A77C2A01CBJ

	A	B	C	D	E	F	G	H	J	K	L	
11	P407	P408	P411	P414	P212/ EXTAL	P215/ XCIN	VCL	P406	P403	P401	P400	11
10	USB_DM	USB_DP	P410	P415	P213/ XTAL	P214/ XCOUT	VBATT	P405	P402	P511	P512	10
9	VCC_ USB	VSS_ USB	P409	P412	P708	VCC	VSS	P404	P002	P001	P000	9
8	P205	VCC_ USB_ LDO	P206	P204	P413	P710	P702	P006	P004	P003	P005	8
7	P203	P202	P313	P314	P315	P709	P701	P007	AVSS0	P011/ VREFL0	P010/ VREFH0	7
6	VSS	VCC	RES	P201/MD	P200	NC	P700	P008	AVCC0	P013/ VREFL	P012/ VREFH	6
5	P308	P309	P307	P302	P304	P612	P601	P506	P505	P015	P014	5
4	P305	P306	P808	P114	P611	P603	P600	P504	P503	VSS	VCC	4
3	P809	P303	P110/TDI	P111	P609	P604	P106	P104	P502	P500	P501	3
2	P301	P108/ TMS/ SWDIO	P113	P608	P613	P605	P602	P105	P102	P801	P800	2
1	P300/ TCK/ SWCLK	P109/ TDO/ SWO	P112	P115	P610	VCC	VSS	P107	P103	P101	P100	1
	A	B	C	D	E	F	G	H	J	K	L	

Figure 1.5 Pin assignment for BGA 121-pin (Upper perspective view)

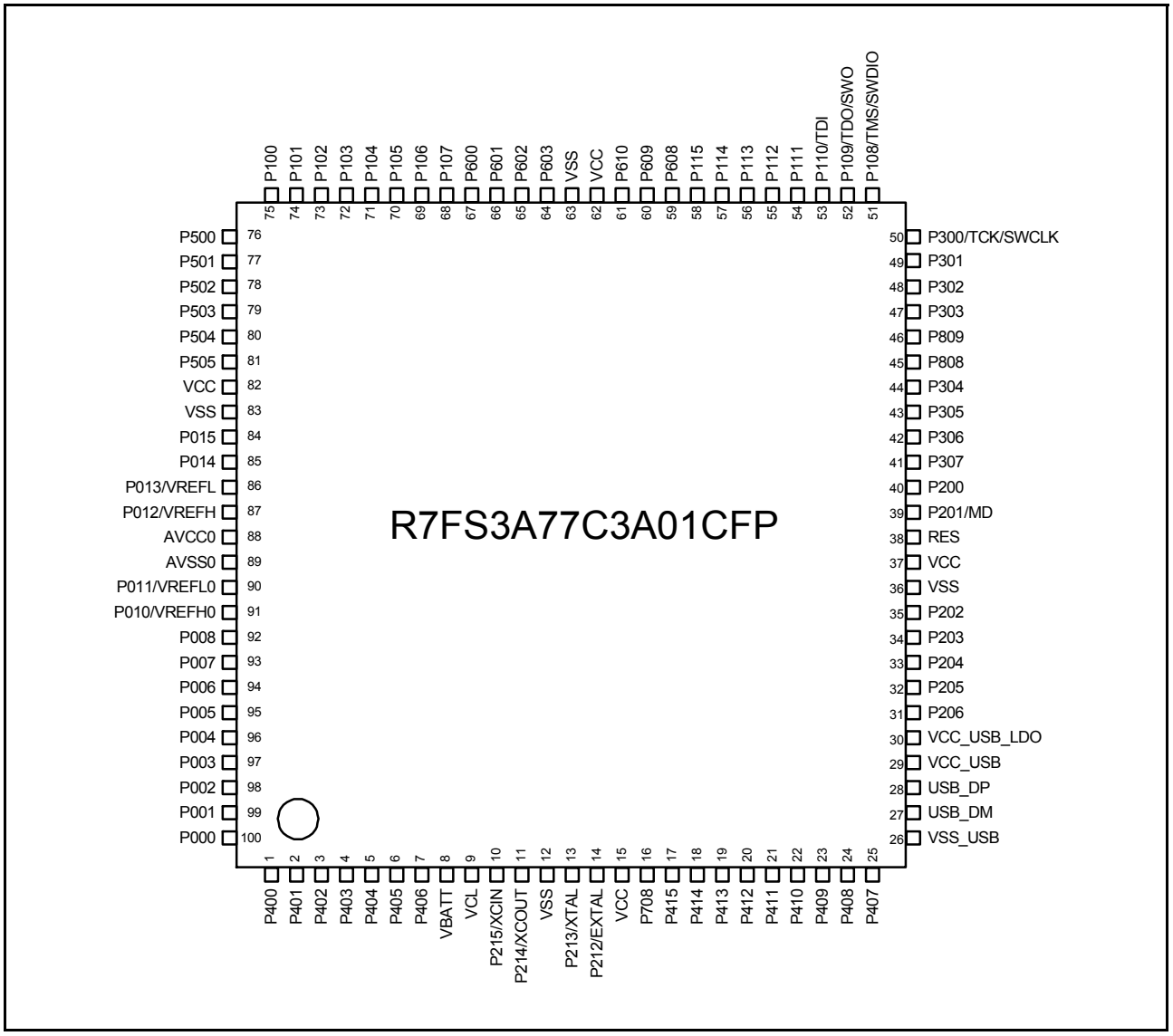

Figure 1.6 Pin assignment for LQFP 100-pin (Top view)

R7FS3A77C2A01CLJ

	A	B	C	D	E	F	G	H	J	K	
10	P407	P409	P412	VCC	P212/ EXTAL	P215/ XCIN	VCL	P403	P400	P000	10
9	USB_DM	USB_DP	P413	VSS	P213/ XTAL	P214/ XCOUT	VBATT	P405	P401	P001	9
8	VCC_ USB	VSS_ USB	VCC_US B_LDO	P411	P415	P708	P404	P003	P004	P002	8
7	P205	P204	P206	P408	P414	P406	P006	P007	P008	P005	7
6	VSS	VCC	P202	P203	P410	P402	P505	AVSS0	P011/ VREFL0	P010/ VREFH0	6
5	P200	P201/MD	P307	RES	P113	P600	P504	AVCC0	P013/ VREFL	P012/ VREFH	5
4	P305	P304	P808	P306	P115	P601	P503	P100	P015	P014	4
3	P809	P303	P110/TDI	P111	P609	P602	P107	P103	VSS	VCC	3
2	P300/ TCK/ SWCLK	P302	P301	P114	P610	P603	P106	P101	P501	P502	2
1	P108/ TMS/ SWDIO	P109/ TDO/ SWO	P112	P608	VCC	VSS	P105	P104	P102	P500	1
	A	B	C	D	E	F	G	H	J	K	

Figure 1.7 Pin assignment for LGA 100-pin (Upper perspective view)

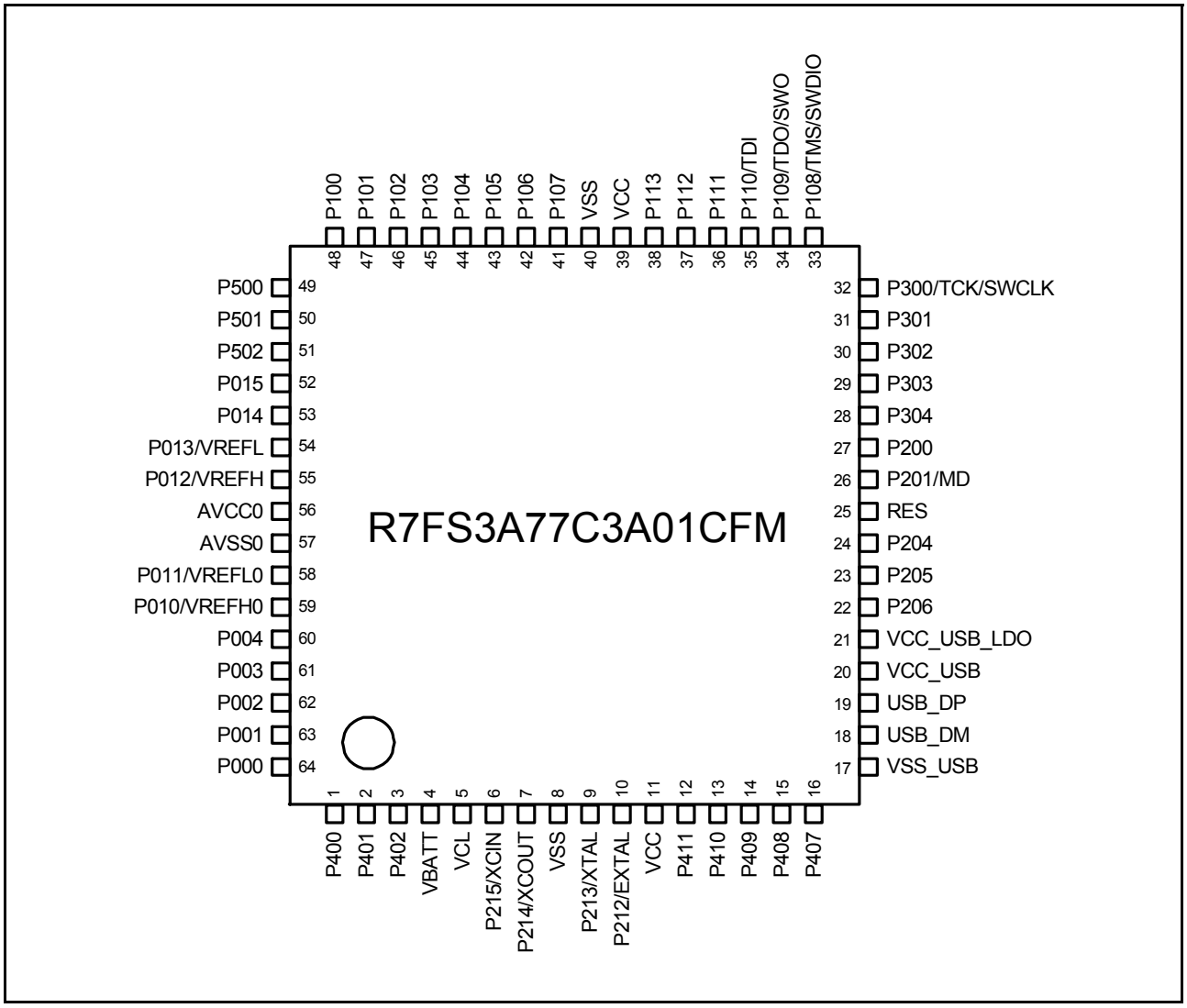

Figure 1.8 Pin assignment for LQFP 64-pin (Top view)

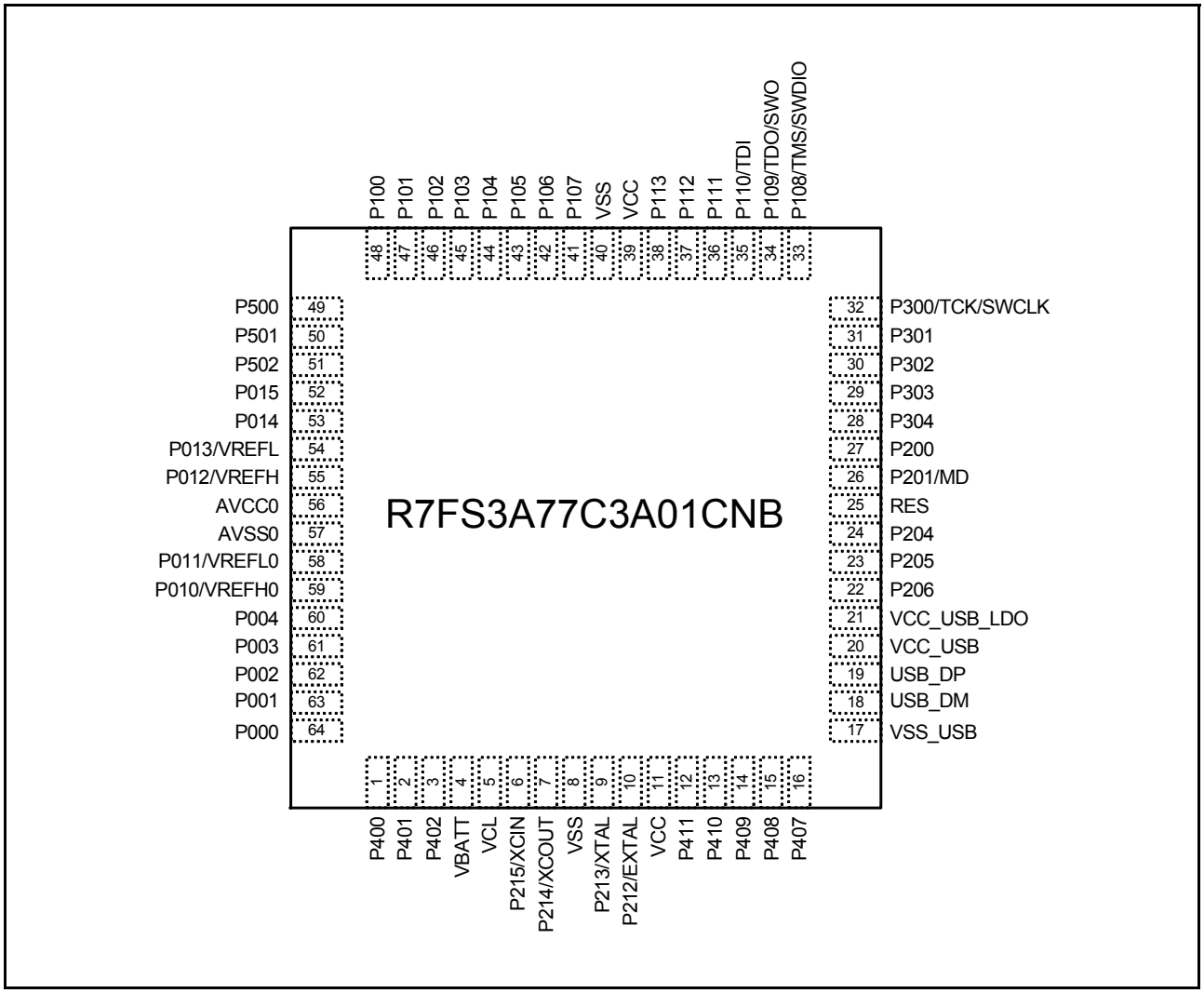

Figure 1.9 Pin assignment for QFN 64-pin (Upper perspective view)

1.7 Pin Lists

Pin number										Timers				Communication interfaces						Analogs			HMI		
LGA145	LQFP144	BGA121	LQFP100	LGA100	LQFP64	QFN64	Power, System, Clock, Debug, CAC, VBATT	I/O ports	External bus	AGT	GPT_OPS, POEG	GPT	RTC	USBFS,CAN	SCI	IIC	SPI/QSPI	SSI	SDHI	ADC14	DAC12, OPAMP	ACMPHS, ACMPLP	SLCDC	CTSU	Interrupt
N13	1	L11	1	J10	1	1		P400				GTIOC6A_A			SCK4_B	SCL0_A		AUDIO_CLK						TS20	IRQ0
L11	2	K11	2	J9	2	2		P401			GTETRGA_B	GTIOC6B_A		CTX0_B	CTS4_RTS4_B/SS4_B	SDA0_A								TS19	IRQ5
M13	3	J10	3	F6	3	3	VBATWIO0	P402		AGTIO0_B/AGTIO1_B			RTCIC0	CRX0_B										TS18	IRQ4
K11	4	J11	4	H10			VBATWIO1	P403		AGTIO0_C/AGTIO1_C		GTIOC3A_B	RTCIC1					SSISCK0_A						TS17	
L12	5	H9	5	G8			VBATWIO2	P404				GTIOC3B_B	RTCIC2					SSIWS0_A						TS16	
L13	6	H10	6	H9				P405				GTIOC1A_B						SSITXD0_A						TS15	
J10	7	H11	7	F7				P406				GTIOC1B_B						SSIRXD0_A						TS14	
H10	8	G6						P700				GTIOC5A_B												TS32	
K12	9	G7						P701				GTIOC5B_B												TS33	
K13	10	G8						P702				GTIOC6A_B												TS34	
J11	11							P703				GTIOC6B_B													
H11	12							P704																	
G11	13							P705																	
J12	14	G10	8	G9	4	4	VBATT																		
J13	15	G11	9	G10	5	5	VCL																		
H13	16	F11	10	F10	6	6	XCIN	P215																	
H12	17	F10	11	F9	7	7	XCOUT	P214																	
F12	18	G9	12	D9	8	8	VSS																		
G12	19	E10	13	E9	9	9	XTAL	P213			GTETRGC_A				TXD1_A/MOSI1_A/SDA1_A										IRQ2
G13	20	E11	14	E10	10	10	EXTAL	P212		AGTEE1	GTETRGD_A				RXD1_A/MISO1_A/SCL1_A										IRQ3
F13	21	F9	15	D10	11	11	VCC																		
G10	22							P713				GTIOC2A_B													
F11	23							P712				GTIOC2B_B													
E13	24							P711							CTS1_RTS1_B/SS1_B										
E12	25	F8						P710							SCK1_B									TS35	
F10	26	F7						P709							TXD1_B/MOSI1_B/SDA1_B									TS13	IRQ10
D13	27	E9	16	F8			CACREF_B	P708							RXD1_B/MISO1_B/SCL1_B		SSLA3_B							TS12	IRQ11
E11	28	D10	17	E8				P415									SSLA2_B							TS11	
D12	29	D11	18	E7				P414									SSLA1_B		SD0WP					TS10	
E10	30	E8	19	C9				P413			GTOUUP_B				CTS0_RTS0_B/SS0_B		SSLA0_B		SD0CLK					TS09	
C13	31	D9	20	C10				P412			GTOULO_B				SCK0_B		RSPCKA_B		SD0CMD					TS08	

Pin number										Timers				Communication interfaces						Analogs			HMI		
LGA145	LQFP144	BGA121	LQFP100	LGA100	LQFP64	QFN64	Power, System, Clock, Debug, CAC, VBATT	I/O ports	External bus	AGT	GPT_OPS, POEG	GPT	RTC	USBFS,CAN	SCI	IIC	SPI/QSPI	SSI	SDHI	ADC14	DAC12, OPAMP	ACMPHS, ACMPLP	SLCDC	CTSU	Interrupt
D11	32	C11	21	D8	12	12		P411		AGTOA1	GTOVUP_B	GTIOC9A_A			TXD0_B/MOSI0_B/SDA0_B/CTS3_RTS3_A/SS3_A		MOSIA_B		SD0DAT0					TS07	IRQ4
C12	33	C10	22	E6	13	13		P410		AGTOB1	GTOVLO_B	GTIOC9B_A			RXD0_B/MISO0_B/SCL0_B/SCK3_A		MISOA_B		SD0DAT1					TS06	IRQ5
B13	34	C9	23	B10	14	14		P409			GTOWUP_B			USB_EXICEN_A	TXD3_A/MOSI3_A/SDA3_A									TS05	IRQ6
D10	35	B11	24	D7	15	15		P408			GTOWLO_B			USB_ID_A	RXD3_A/MISO3_A/SCL3_A									TS04	IRQ7
A13	36	A11	25	A10	16	16		P407					RTCOUT	USB_VBUS	CTS4_RTS4_A/SS4_A	SDA0_B	SSLB3_A			ADTRG0_B				TS03	
B11	37	B9	26	B8	17	17	VSS_USB																		
A12	38	A10	27	A9	18	18								USB_DM											
B12	39	B10	28	B9	19	19								USB_DP											
A11	40	A9	29	A8	20	20	VCC_USB																		
C11	41	B8	30	C8	21	21	VCC_USB_LDO																		
B10	42	C8	31	C7	22	22		P206	WAIT		GTIU_A			USB_VBUSEN_A	RXD4_A/MISO4_A/SCL4_A	SDA1_A	SSLB1_A	SSIDATA1_A	SD0DAT2					TS01	IRQ0
A10	43	A8	32	A7	23	23	CLKOUT_A	P205	A16	AGTO1	GTIV_A	GTIOC4A_B		USB_OVRCURA	TXD4_A/MOSI4_A/SDA4_A/CTS9_RTS9_A/SS9_A	SCL1_A	SSLB0_A	SSIWS1_A	SD0DAT3					TSCAP_A	IRQ1
C10	44	D8	33	B7	24	24	CACREF_A	P204		AGTIO1_A	GTIW_A	GTIOC4B_B		USB_OVRCURB	SCK4_A/SCK9_A	SCL0_B	RSPCKB_A	SSISCK1_A	SD0DAT4				SEG23	TS00	
A9	45	A7	34	D6				P203				GTIOC5A_A		CTX0_A	CTS2_RTS2_A/SS2_A/TXD9_A/MOSI9_A/SDA9_A		MOSIB_A		SD0DAT5				SEG22	TSCAP_B	IRQ2
C9	46	B7	35	C6				P202	WR1/BC1			GTIOC5B_A		CRX0_A	SCK2_A/RXD9_A/MISO9_A/SCL9_A		MISOB_A		SD0DAT6				SEG21		IRQ3
B9	47	C7						P313											SD0DAT7				SEG20		
D9	48	D7						P314															SEG4		
D8	49	E7						P315															SEG5		
A8	50							P900															SEG6		
B8	51							P901															SEG7		
B7	52							P902															SEG8		
A7	53	A6	36	A6			VSS																		
A6	54	B6	37	B6			VCC																		
C7	55	C6	38	D5	25	25	RES																		
B6	56	D6	39	B5	26	26	MD	P201																	
C8	57	E6	40	A5	27	27		P200																	NMI
C6	58							P312	CS3														SEG9		

Pin number										Timers				Communication interfaces						Analogs			HMI		
LGA145	LQFP144	BGA121	LQFP100	LGA100	LQFP64	QFN64	Power, System, Clock, Debug, CAC, VBATT	I/O ports	External bus	AGT	GPT_OPS, POEG	GPT	RTC	USBFS,CAN	SCI	IIC	SPI/QSPI	SSI	SDHI	ADC14	DAC12, OPAMP	ACMPHS, ACMPLP	SLCDC	CTSU	Interrupt
B5	59							P311	CS2														SEG10		
D7	60							P310	A15														SEG11		
A5	61	B5						P309	A14														SEG12		
C5	62	A5						P308	A13														SEG13		
A4	63	C5	41	C5				P307	A12														SEG14		
B4	64	B4	42	D4				P306	A11														SEG15		
D6	65	A4	43	A4				P305	A10														SEG16		IRQ8
C4	66	E5	44	B4	28	28		P304	A09			GTIOC 7A_A											SEG17		IRQ9
A3	67	C4	45	C4				P808															SEG18		
B3	68	A3	46	A3				P809															SEG19		
D5	69	B3	47	B3	29	29		P303	A08			GTIOC 7B_A											SEG3/ COM7		
A2	70	D5	48	B2	30	30		P302	A07		GTOU UP_A	GTIOC 4A_A			TXD2_ A/ MOSI2 _A/ SDA2_ A		SSLB3 _B						SEG2/ COM6		IRQ5
C3	71	A2	49	C2	31	31		P301	A06		GTOU LO_A	GTIOC 4B_A			RXD2_ A/ MISO2 _A/ SCL2_ A		SSLB2 _B						SEG1/ COM5		IRQ6
B2	72	A1	50	A2	32	32	TCK/ SWCL K	P300				GTIOC 0A_A					SSLB1 _B								
A1	73	B2	51	A1	33	33	TMS/ SWDI O	P108				GTIOC 0B_A			CTS9_ RTS9_ B/ SS9_B		SSLB0 _B								
D4	74	B1	52	B1	34	34	TDO/ SWO/ CLKO UT_B	P109			GTOV UP_A	GTIOC 1A_A		CTX1_ A	TXD9_ B/ MOSI9 _B/ SDA9_ B		MOSIB _B								
B1	75	C3	53	C3	35	35	TDI	P110			GTOV LO_A	GTIOC 1B_A		CRX1_ A	CTS2_ RTS2_ B/ SS2_B / RXD9_ B/ MISO9 _B/ SCL9_ B		MISOB _B					VCOU T			IRQ3
C2	76	D3	54	D3	36	36		P111	A05			GTIOC 3A_A			SCK2_ B/ SCK9_ B		RSPC KB_B						CAPH		IRQ4
D3	77	C1	55	C1	37	37		P112	A04			GTIOC 3B_A			TXD2_ B/ MOSI2 _B/ SDA2_ B			SSISC K0_B					CAPL		
C1	78	C2	56	E5	38	38		P113	A03						RXD2_ B/ MISO2 _B/ SCL2_ B			SSIWS 0_B					SEG0/ COM4		
E4	79	D4	57	D2				P114	A02									SSIRX D0_B					SEG24		
E3	80	D1	58	E4				P115	A01									SSITX D0_B					SEG25		
D2	81							P806															SEG26		
D1	82							P807															SEG27		
F4	83	D2	59	D1				P608	A00/ BC0														SEG28		
E2	84	E3	60	E3				P609	CS1														SEG29		
F3	85	E1	61	E2				P610	CS0														SEG30		
E1	86	E4						P611															SEG31		
F2	87	F5						P612	D08														SEG32		
F1	88	E2						P613	D09														SEG33		
G3	89							P614	D10														SEG34		
G1	90	F1	62	E1	39	39	VCC																		
G2	91	G1	63	F1	40	40	VSS																		
H1	92							P606															SEG35		
H2	93	F2						P605	D11														SEG36		
G4	94	F3						P604	D12														SEG37		
H3	95	F4	64	F2				P603	D13														SEG38		
J1	96	G2	65	F3				P602	EBCLK														SEG39		
J2	97	G5	66	F4				P601	WR/ WR0														SEG40		
H4	98	G4	67	F5				P600	RD														SEG41		
K2	99							P805															SEG42		
K1	100							P804															SEG43		

Pin number							Power, System, Clock, Debug, CAC, VBATT	I/O ports	External bus	Timers				Communication interfaces						Analogs			HMI		
LGA145	LQFP144	BGA121	LQFP100	LGA100	LQFP64	QFN64				AGT	GPT_OPS, POEG	GPT	RTC	USBFS,CAN	SCI	IIC	SPI/QSPI	SSI	SDHI	ADC14	DAC12, OPAMP	ACMPHS, ACMPLP	SLCDC	CTSU	Interrupt
J3	101	H1	68	G3	41	41		P107	D07			GTIOC8A_A											COM3		KR07
K3	102	G3	69	G2	42	42		P106	D06			GTIOC8B_A					SSLA3_A						COM2		KR06
J4	103	H2	70	G1	43	43		P105	D05		GTETRGA_C						SSLA2_A						COM1		KR05/IRQ0
L3	104	H3	71	H1	44	44		P104	D04		GTETRGB_B						SSLA1_A						COM0		KR04/IRQ1
L1	105	J1	72	H3	45	45		P103	D03		GTOWUP_A	GTIOC2A_A			CTS0_RTS0_A/SS0_A		SSLA0_A			AN024		CMPREF1	VL4		KR03
M1	106	J2	73	J1	46	46		P102	D02	AGTO0	GTOWLO_A	GTIOC2B_A			SCK0_A		RSPCKA_A			AN025/ADTRG0_A		CMPIN1	VL3		KR02
M2	107	K1	74	H2	47	47		P101	D01	AGTEE0	GTETRGB_A				TXD0_A/MOSI0_A/SDA0_A/CTS1_RTS1_A/SS1_A	SDA1_B	MOSIA_A			AN026		CMPREF0	VL2		KR01/IRQ1
N1	108	L1	75	H4	48	48		P100	D00	AGTIO0_A	GTETRGA_A				RXD0_A/MISO0_A/SCL0_A	SCL1_B	MISOA_A			AN027		CMPIN0	VL1		KR00/IRQ2
L2	109	L2						P800	D14														SEG44		
N2	110	K2						P801	D15														SEG45		
N3	111							P802															SEG46		
M3	112							P803															SEG47		
K4	113	K3	76	K1	49	49		P500		AGTOA0	GTIU_B			USB_VBUSEN_B			QSPCLK			AN016			SEG48		
M4	114	L3	77	J2	50	50		P501		AGTOB0	GTIV_B			USB_OVRCURA			QSSL			AN017			SEG49		IRQ11
L4	115	J3	78	K2	51	51		P502			GTIW_B			USB_OVRCURB			QIO0			AN018			SEG50		IRQ12
K5	116	J4	79	G4				P503			GTETRGC_B			USB_EXICEN_B			QIO1			AN019			SEG51		
L5	117	H4	80	G5				P504			GTETRGD_B			USB_ID_B			QIO2			AN020					
K6	118	J5	81	G6				P505									QIO3			AN021					IRQ14
L6	119	H5						P506												AN022					IRQ15
N4	120							P507												AN023					
N5	121	L4	82	K3			VCC																		
M5	122	K4	83	J3			VSS																		
M6	123	K5	84	J4	52	52		P015												AN015	DA1	IVCMP5/IVCMP2			IRQ13
N6	124	L5	85	K4	53	53		P014												AN014	DA0	IVREF5/IVREF2			
M7	125	K6	86	J5	54	54	VREFL	P013												AN013	AMP1+				
N7	126	L6	87	K5	55	55	VREFH	P012												AN012	AMP1-				
L7	127	J6	88	H5	56	56	AVCC0																		
L8	128	J7	89	H6	57	57	AVSS0																		
M8	129	K7	90	J6	58	58	VREFL0	P011												AN011	AMP2+			TS31	IRQ15
N8	130	L7	91	K6	59	59	VREFH0	P010												AN010	AMP2-			TS30	IRQ14
M9	131							P009												AN009					IRQ13
N9	132	H6	92	J7				P008												AN008				TS29	IRQ12
K7	133	H7	93	H7				P007												AN007	AMP3O	IVCMP4/IVCMP1			
L9	134	H8	94	G7				P006												AN006	AMP3-	IVREF4/IVREF1		TS27	IRQ11
K8	135	L8	95	K7				P005												AN005	AMP3+	IVREF0		TS26	IRQ10
K9	136	J8	96	J8	60	60		P004												AN004	AMP2O	IVCMP0			IRQ9
K10	137	K8	97	H8	61	61		P003												AN003	AMP1O	IVREF3/IVCMP3			

Pin number							Power, System, Clock, Debug, CAC, VBATT	I/O ports	External bus	Timers				Communication interfaces						Analogs			HMI		
LGA145	LQFP144	BGA121	LQFP100	LGA100	LQFP64	QFN64				AGT	GPT_OPS, POEG	GPT	RTC	USBFS,CAN	SCI	IIC	SPI/QSPI	SSI	SDHI	ADC14	DAC12, OPAMP	ACMPHS, ACMPLP	SLCDC	CTSU	Interrupt
M10	138	J9	98	K8	62	62		P002												AN002	AMP0 O	IVREF 2/ IVCMP 2			IRQ8
N10	139	K9	99	K9	63	63		P001												AN001	AMP0-	IVREF 1/ IVCMP 1		TS22	IRQ7
L10	140	L9	100	K10	64	64		P000												AN000	AMP0+	IVREF 0/ IVCMP 0		TS21	IRQ6
N11	141						VSS																		
N12	142						VCC																		
M11	143	L10						P512				GTIOC 0A_B			TXD4_ B/ MOSI4 _B/ SDA4_ B	SCL2									IRQ14
M12	144	K10						P511				GTIOC 0B_B			RXD4_ B/ MISO4 _B/ SCL4_ B	SDA2									IRQ15
E5		F6					NC																		

Note: Several pin names have the added suffix of _A, _B, and _C. The suffix can be ignored when assigning functionality.

2. Electrical Characteristics

Unless otherwise specified, the electrical characteristics of the MCU are defined under the following conditions:

VCC*1 = AVCC0 = VCC_USB*2 = VCC_USB_LDO*2 = 1.6 to 5.5V, VRERH = VREFH0 = 1.6 to AVCC0, VBATT = 1.6 to 3.6V, VSS = AVSS0 = VREFL = VREFL0 = VSS_USB = 0V, Ta = T_{opr}

Note 1. The typical condition is set to VCC = 3.3V.
Note 2. When USBFS is not used.

Figure 2.1 shows the timing conditions.

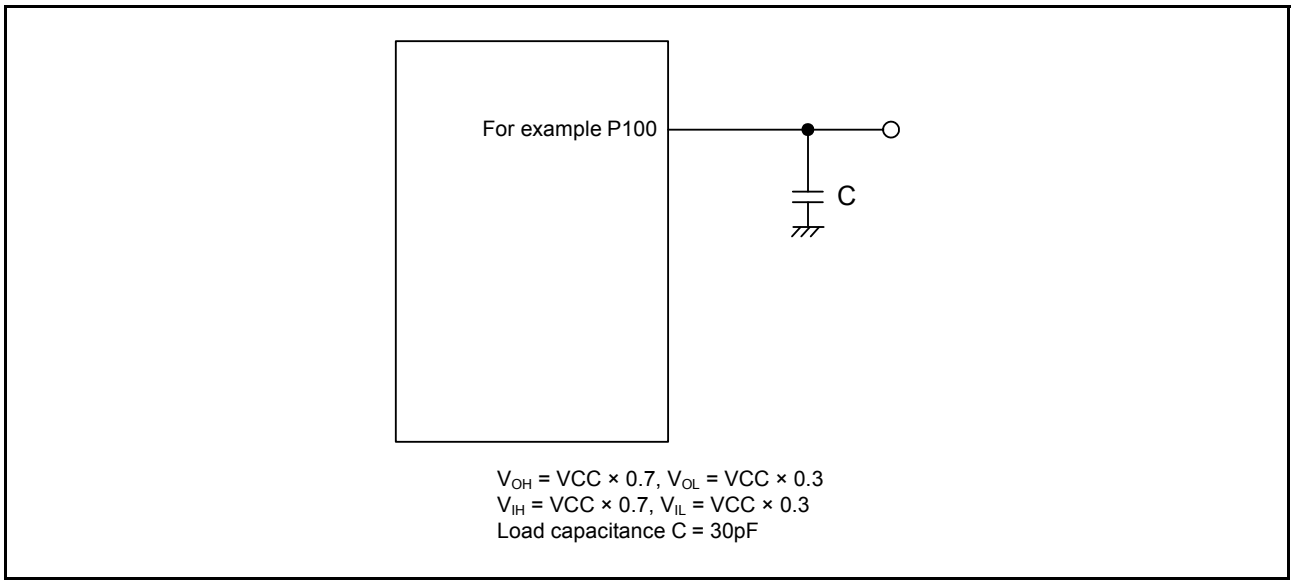

Figure 2.1 Input or output timing measurement conditions

The measurement conditions of timing specification in each peripherals are recommended for the best peripheral operation. However, make sure to adjust driving abilities of each pins to meet your conditions.

2.1 Absolute Maximum Ratings

Table 2.1 Absolute maximum ratings

Item		Symbol	Value	Unit
Power supply voltage		VCC	–0.5 to +6.5	V
Input voltage	5V-tolerant ports*1	V_{in}	–0.3 to +6.5	V
	P000 to P015	V_{in}	–0.3 to AVCC0 + 0.3	V
	Others	V_{in}	–0.3 to VCC + 0.3	V
Reference power supply voltage		VREFH0	–0.3 to +6.5	V
		VREFH		V
VBATT power supply voltage		VBATT	–0.5 to +6.5	V
Analog power supply voltage		AVCC0	–0.5 to +6.5	V
USB power supply voltage		VCC_USB	–0.5 to +6.5	V
		VCC_USB_LDO	–0.5 to +6.5	V
Analog input voltage	When AN000 to AN015 are used	V_{AN}	–0.3 to AVCC0 + 0.3	V
	When AN016 to AN027 are used		–0.3 to VCC + 0.3	V
LCD voltage	VL1 voltage	V_{L1}	–0.3 to +2.8	V
	VL2 voltage	V_{L2}	–0.3 to +6.5	V
	VL3 voltage	V_{L3}	–0.3 to +6.5	V
	VL4 voltage	V_{L4}	–0.3 to +6.5	V
Operating temperature*2 *3		T_{opr}	–40 to +105	°C
Storage temperature		T_{stg}	–55 to +125	°C

Caution: Permanent damage to the MCU may result if absolute maximum ratings are exceeded.
To preclude any malfunctions due to noise interference, insert capacitors of high frequency characteristics between the VCC and VSS pins, between the AVCC0 and AVSS0 pins, between the VCC_USB and VSS_USB pins, between the VREFH0 and VREFL0 pins, and between the VREFH and VREFL pins. Place capacitors of about 0.1 µF as close as possible to every power supply pin and use the shortest and heaviest possible traces. Also, connect capacitors as stabilization capacitance.
Connect the VCL pin to a VSS pin by a 4.7 µF capacitor. The capacitor must be placed close to the pin.

Note 1. Ports P205, P206, P400 to P404, P407, P511, P512 are 5V-tolerant.
Do not input signals or an I/O pull-up power supply while the device is not powered. The current injection that results from input of such a signal or I/O pull-up might cause malfunction and the abnormal current that passes in the device at this time might cause degradation of internal elements.

Note 2. See section 2.2.1, Tj/Ta Definition.

Note 3. Contact Renesas Electronics sales office for information on derating operation under Ta = +85°C to +105°C. Derating is the systematic reduction of load for improved reliability.

Table 2.2 Recommended operating conditions

Item	Symbol	Value	Min	Typ	Max	Unit
Power supply voltages	VCC*1, *2	When USBFS is not used	1.6	-	5.5	V
		When USBFS is used USB Regulator Disable	VCC_USB	-	3.6	V
		When USBFS is used USB Regulator Enable	VCC_USB _LDO	-	5.5	V
	VSS		-	0	-	V
USB power supply voltages	VCC_USB	When USBFS is not used	-	VCC	-	V
		When USBFS is used USB Regulator Disable (Input)	3.0	3.3	3.6	V
	VCC_USB_LDO	When USBFS is not used	-	VCC	-	V
		When USBFS is used USB Regulator Enable	3.8	-	5.5	V
	VSS_USB		-	0	-	V
VBATT power supply voltage	VBATT	When the battery backup function is not used	-	VCC	-	V
		When the battery backup function is used	1.6	-	3.6	V
Analog power supply voltages	AVCC0*1, *2		1.6	-	5.5	V
	AVSS0		-	0	-	V
	VREFH0	When used as ADC14 Reference	1.6	-	AVCC0	V
	VREFL0		-	0	-	V
	VREFH	When used as DAC12 Reference	1.6	-	AVCC0	V
	VREFL		-	0	-	V

Note 1. Use AVCC0 and VCC under the following conditions:
AVCC0 and VCC can be set individually within the operating range when VCC ≥ 2.0 V
AVCC0 = VCC when VCC < 2.0 V

Note 2. When powering on the VCC and AVCC0 pins, power them on at the same time or the VCC pin first and then the AVCC0 pin.

2.2 DC Characteristics

2.2.1 Tj/Ta Definition

Table 2.3 DC Characteristics
Conditions: Products with operating temperature (T_a) –40 to +105°C

Item	Symbol	Typ	Max	Unit	Test conditions
Permissible junction temperature	Tj	-	125	°C	High-speed mode Middle-speed mode Low-voltage mode Low-speed mode Subosc-speed mode

Note: Make sure that Tj = T_a + θja × total power consumption (W), where total power consumption = (VCC – V_{OH}) × ΣI_{OH} + V_{OL} × ΣI_{OL} + I_{CC}max × VCC.

2.2.2 I/O V_{IH}, V_{IL}

Table 2.4 I/O V_{IH}, V_{IL} (1)
Conditions: VCC = 2.7 to 5.5 V, AVCC0 = 2.7 to 5.5 V, VBATT = 1.6 to 3.6 V, VSS = AVSS0 = 0 V

Item		Symbol	Min	Typ	Max	Unit	Test conditions
Schmitt trigger input voltage	IIC*1 (except for SMBus)	V_{IH}	VCC × 0.7	-	5.8	V	-
		V_{IL}	–0.3	-	VCC × 0.3		
		ΔV_T	VCC × 0.05	-	-		
	RES, NMI Other peripheral input pins excluding IIC	V_{IH}	VCC × 0.8	-	VCC + 0.3		
		V_{IL}	–0.3	-	VCC × 0.2		
		ΔV_T	VCC × 0.1	-	-		
Input voltage (except for Schmitt trigger input pin)	IIC (SMBus)*2	V_{IH}	2.2	-	VCC + 0.3		VCC = 3.6 to 5.5 V
		V_{IH}	2.0	-	VCC + 0.3		VCC = 2.7 to 3.6 V
		V_{IL}	–0.3	-	0.8		-
	5V-tolerant ports*3	V_{IH}	VCC × 0.8	-	5.8		
		V_{IL}	–0.3	-	VCC × 0.2		
	P000 to P015	V_{IH}	AVCC0 × 0.8	-	AVCC + 0.3		
		V_{IL}	–0.3	-	AVCC0 × 0.2		
	EXTAL D00 to D15 Input ports pins except for P000 to P015	V_{IH}	VCC × 0.8	-	VCC + 0.3		
		V_{IL}	–0.3	-	VCC × 0.2		
When V_{BATT} power supply is selected	P402, P403, P404	V_{IH}	V_{BATT} × 0.8	-	V_{BATT} + 0.3		
		V_{IL}	–0.3	-	V_{BATT} × 0.2		
		ΔV_T	V_{BATT} × 0.05	-	-		

Note 1. SCL0_A, SDA0_A, SCL1_A, SDA1_A, SCL2, SDA2, SDA0_B (total 7 pins).
Note 2. SCL0_A, SDA0_A, SCL0_B, SDA0_B, SCL1_A, SDA1_A, SCL1_B, SDA1_B, SCL2, SDA2 (total 10 pins).
Note 3. P205, P206, P400 to P404, P407, P511, P512 (total 10pins).

Table 2.5 I/O V_{IH}, V_{IL} (2)

Conditions: VCC = 1.6 to 2.7 V, AVCC0 = 1.6 to 2.7 V, VBATT = 1.6 to 3.6 V, VSS = AVSS0 = 0 V

Item		Symbol	Min	Typ	Max	Unit	Test conditions
Schmitt trigger input voltage	RES, NMI Peripheral input pins	V_{IH}	VCC × 0.8	-	VCC + 0.3	V	-
		V_{IL}	–0.3	-	VCC × 0.2		
		ΔV_T	VCC × 0.01	-	-		
Input voltage (except for Schmitt trigger input pin)	5V-tolerant ports*1	V_{IH}	VCC × 0.8	-	5.8		
		V_{IL}	–0.3	-	VCC × 0.2		
	P000 to P015	V_{IH}	AVCC0 × 0.8	-	AVCC + 0.3		
		V_{IL}	–0.3	-	AVCC0 × 0.2		
	EXTAL D0 to D15 Input ports pins except for P000 to P015	V_{IH}	VCC × 0.8	-	VCC + 0.3		
		V_{IL}	–0.3	-	VCC × 0.2		
When V_{BATT} power supply is selected	P402, P403, P404	V_{IH}	V_{BATT} × 0.8	-	V_{BATT} + 0.3		
		V_{IL}	–0.3	-	V_{BATT} × 0.2		
		ΔV_T	V_{BATT} × 0.01	-	-		

Note 1. P205, P206, P400 to P404, P407, P511, P512 (total 10 pins)

2.2.3 I/O I_{OH}, I_{OL}

Table 2.6 I/O I_{OH}, I_{OL}
Conditions: VCC = AVCC0 = 1.6 to 5.5 V

Item			Symbol	Min	Typ	Max	Unit
Permissible output current (average value per pin)	Ports P000 to P015, Ports P212, P213	-	I_{OH}	-	-	–4.0	mA
			I_{OL}	-	-	4.0	mA
	Ports P408, P409	Low drive*1	I_{OH}	-	-	–4.0	mA
			I_{OL}	-	-	4.0	mA
		Middle drive*2 VCC = 2.7 to 3.0 V	I_{OH}	-	-	–8.0	mA
			I_{OL}	-	-	8.0	mA
		Middle drive*2 VCC = 3.0 to 5.5 V	I_{OH}	-	-	–20.0	mA
			I_{OL}	-	-	20.0	mA
	Ports P100 to P115, P201 to P204, P300 to P315, P500 to P503, P600 to P606, P608 to P614, P800 to P809, P900 to P902 (total 67 pins)	Low drive*1	I_{OH}	-	-	–4.0	mA
			I_{OL}	-	-	4.0	mA
		Middle drive*2	I_{OH}	-	-	–4.0	mA
			I_{OL}	-	-	8.0	mA
	Other output pin*3	Low drive*1	I_{OH}	-	-	–4.0	mA
			I_{OL}	-	-	4.0	mA
		Middle drive*2	I_{OH}	-	-	–8.0	mA
			I_{OL}	-	-	8.0	mA
Permissible output current (Max value per pin)	Ports P000 to P015, Ports P212, P213	-	I_{OH}	-	-	–4.0	mA
			I_{OL}	-	-	4.0	mA
	Ports P408, P409	Low drive*1	I_{OH}	-	-	–4.0	mA
			I_{OL}	-	-	4.0	mA
		Middle drive*2 VCC = 2.7 to 3.0 V	I_{OH}	-	-	–8.0	mA
			I_{OL}	-	-	8.0	mA
		Middle drive*2 VCC = 3.0 to 5.5 V	I_{OH}	-	-	–20.0	mA
			I_{OL}	-	-	20.0	mA
	Ports P100 to P115, P201 to P204, P300 to P315, P500 to P503, P600 to P606, P608 to P614, P800 to P809, P900 to P902 (total 67 pins)	Low drive*1	I_{OH}	-	-	–4.0	mA
			I_{OL}	-	-	4.0	mA
		Middle drive*2	I_{OH}	-	-	–4.0	mA
			I_{OL}	-	-	8.0	mA
	Other output pin*3	Low drive*1	I_{OH}	-	-	–4.0	mA
			I_{OL}	-	-	4.0	mA
		Middle drive*2	I_{OH}	-	-	–8.0	mA
			I_{OL}	-	-	8.0	mA
Permissible output current (max value total pins)	Total of ports P000 to P015		$\Sigma I_{OH\ (max)}$	-	-	–30	mA
			$\Sigma I_{OL\ (max)}$	-	-	30	mA
	Total of all output pin		$\Sigma I_{OH\ (max)}$	-	-	–60	mA
			$\Sigma I_{OL\ (max)}$	-	-	60	mA

Caution: To protect the reliability of this MCU, the output current values should not exceed the values in this table. The average output current indicates the average value of current measured during 100 µs.

Note 1. This is the value when low driving ability is selected with the port drive capability bit in PmnPFS register.
Note 2. This is the value when middle driving ability is selected with the port drive capability bit in PmnPFS register.
Note 3. Except for ports P200, P214, P215, which are input ports.

2.2.4 I/O V_{OH}, V_{OL}, and Other Characteristics

Table 2.7 I/O V_{OH}, V_{OL} (1)
Conditions: VCC = AVCC0 = 4.0 to 5.5 V

Item			Symbol	Min	Typ	Max	Unit	Test conditions
Output voltage	IIC*1, *2		V_{OL}	-	-	0.4	V	I_{OL} = 3.0 mA
			V_{OL}	-	-	0.6		I_{OL} = 6.0 mA
	Ports P408, P409*2, *3		V_{OH}	VCC – 1.0	-	-		I_{OH} = –20 mA
			V_{OL}	-	-	1.0		I_{OL} = 20 mA
	Ports P000 to P004, P010 to P015	Low drive	V_{OH}	AVCC0 – 0.8	-	-		I_{OH} = –2.0 mA
			V_{OL}	-	-	0.8		I_{OL} = 2.0 mA
		Middle drive	V_{OH}	AVCC0 – 0.8	-	-		I_{OH} = –4.0 mA
			V_{OL}	-	-	0.8		I_{OL} = 4.0 mA
	Other output pins*4	Low drive	V_{OH}	VCC – 0.8	-	-		I_{OH} = –2.0 mA
			V_{OL}	-	-	0.8		I_{OL} = 2.0 mA
		Middle drive	V_{OH}	VCC – 0.8	-	-		I_{OH} = –4.0 mA
			V_{OL}	-	-	0.8		I_{OL} = 4.0 mA

Note 1. SCL0_A, SDA0_A, SCL0_B, SDA0_B, SCL1_A, SDA1_A, SCL1_B, SDA1_B, SCL2, SDA2 (total 10 pins).
Note 2. This is the value when middle driving ability is selected with the port drive capability bit in PmnPFS register.
Note 3. Based on characterization data, not tested in production.
Note 4. Except for ports P200, P214, P215, which are input ports.

Table 2.8 I/O V_{OH}, V_{OL} (2)
Conditions: VCC = AVCC0 = 2.7 to 4.0 V

Item			Symbol	Min	Typ	Max	Unit	Test conditions
Output voltage	IIC*1, *2		V_{OL}	-	-	0.4	V	I_{OL} = 3.0 mA
			V_{OL}	-	-	0.6		I_{OL} = 6.0 mA
	Ports P408, P409*2, *3		V_{OH}	VCC – 1.0	-	-		I_{OH} = –20 mA VCC = 3.3 V
			V_{OL}	-	-	1.0		I_{OL} = 20 mA VCC = 3.3 V
	Ports P000 to P004, P010 to P015	Low drive	V_{OH}	AVCC0 – 0.5	-	-		I_{OH} = –1.0 mA
			V_{OL}	-	-	0.5		I_{OL} = 1.0 mA
		Middle drive	V_{OH}	AVCC0 – 0.5	-	-		I_{OH} = –2.0 mA
			V_{OL}	-	-	0.5		I_{OL} = 2.0 mA
	Other output pins*4	Low drive	V_{OH}	VCC – 0.5	-	-		I_{OH} = –1.0 mA
			V_{OL}	-	-	0.5		I_{OL} = 1.0 mA
		Middle drive	V_{OH}	VCC – 0.5	-	-		I_{OH} = –2.0 mA
			V_{OL}	-	-	0.5		I_{OL} = 2.0 mA

Note 1. SCL0_A, SDA0_A, SCL0_B, SDA0_B, SCL1_A, SDA1_A, SCL1_B, SDA1_B, SCL2, SDA2 (total 10 pins).
Note 2. This is the value when middle driving ability is selected with the port drive capability bit in PmnPFS register.
Note 3. Based on characterization data, not tested in production.
Note 4. Except for ports P200, P214, P215, which are input ports.

Table 2.9 I/O V_{OH}, V_{OL} (3)
Conditions: VCC = AVCC0 = 1.6 to 2.7 V

Item			Symbol	Min	Typ	Max	Unit	Test conditions
Output voltage	Ports P000 to P004, P010 to P015	Low drive	V_{OH}	AVCC0 – 0.3	-	-	V	I_{OH} = –0.5 mA
			V_{OL}	-	-	0.3		I_{OL} = 0.5 mA
		Middle drive	V_{OH}	AVCC0 – 0.3	-	-		I_{OH} = –1.0 mA
			V_{OL}	-	-	0.3		I_{OL} = 1.0 mA
	Other output pins*1	Low drive	V_{OH}	VCC – 0.3	-	-		I_{OH} = –0.5 mA
			V_{OL}	-	-	0.3		I_{OL} = 0.5 mA
		Middle drive	V_{OH}	VCC – 0.3	-	-		I_{OH} = –1.0 mA
			V_{OL}	-	-	0.3		I_{OL} = 1.0 mA

Note 1. Except for ports P200, P214, P215, which are input ports.

Table 2.10 I/O Other Characteristics
Conditions: VCC = AVCC0 = 1.6 to 5.5 V

Item		Symbol	Min	Typ	Max	Unit	Test conditions
Input leakage current	RES, P200, P214, P215	$\lvert I_{in} \rvert$	-	-	1.0	μA	V_{in} = 0 V V_{in} = VCC
Three-state leakage current (off state)	5V-tolerant ports	$\lvert I_{TSI} \rvert$	-	-	1.0	μA	V_{in} = 0 V V_{in} = 5.8 V
	Other ports (except for ports P200, P214, P215 and 5 V tolerant)		-	-	1.0		V_{in} = 0 V V_{in} = VCC
Input pull-up resistor	All Ports (except for ports P200, P214, P215)	R_U	10	20	50	kΩ	V_{in} = 0 V
Input capacitance	USB_DP, USB_DM, P100 to P103, P111, P112, P200	C_{in}	-	-	30	pF	V_{in} = 0 V f = 1 MHz T_a = 25°C
	Other input pins		-	-	15		

2.2.5 I/O Pin Output Characteristics of Low Drive Capacity

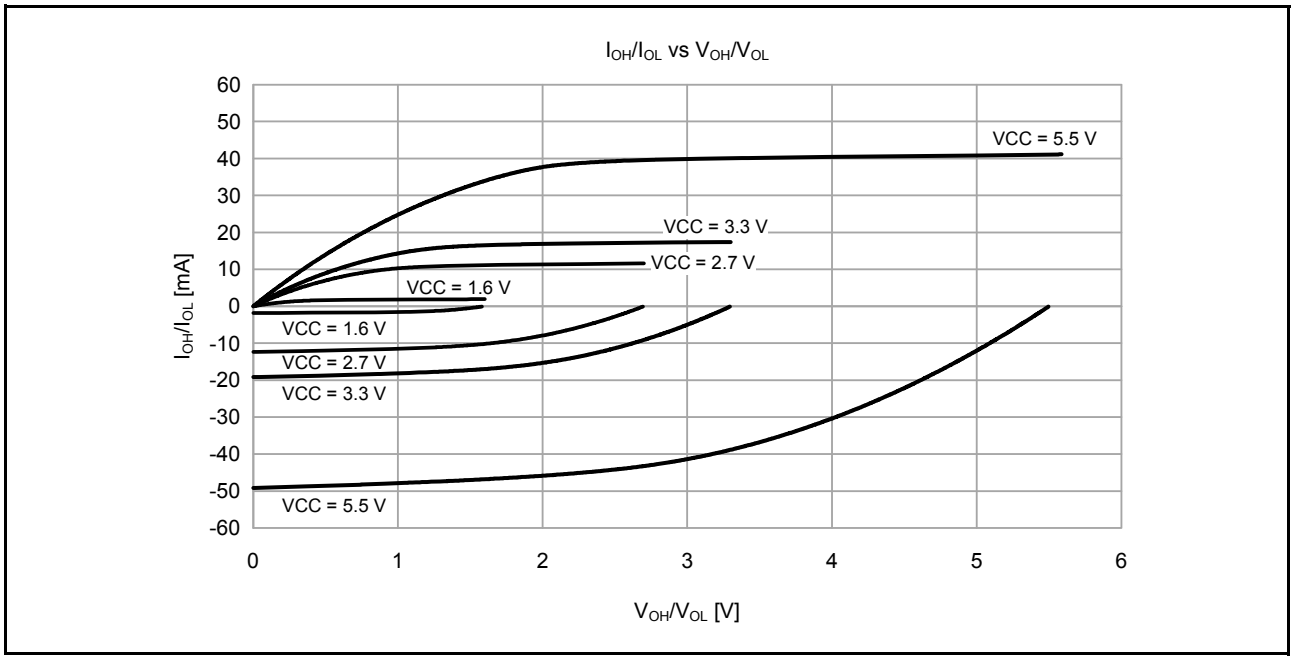

Figure 2.2 **V_{OH}/V_{OL} and I_{OH}/I_{OL} Voltage Characteristics at Ta = 25°C When Low drive output is Selected (Reference Data)**

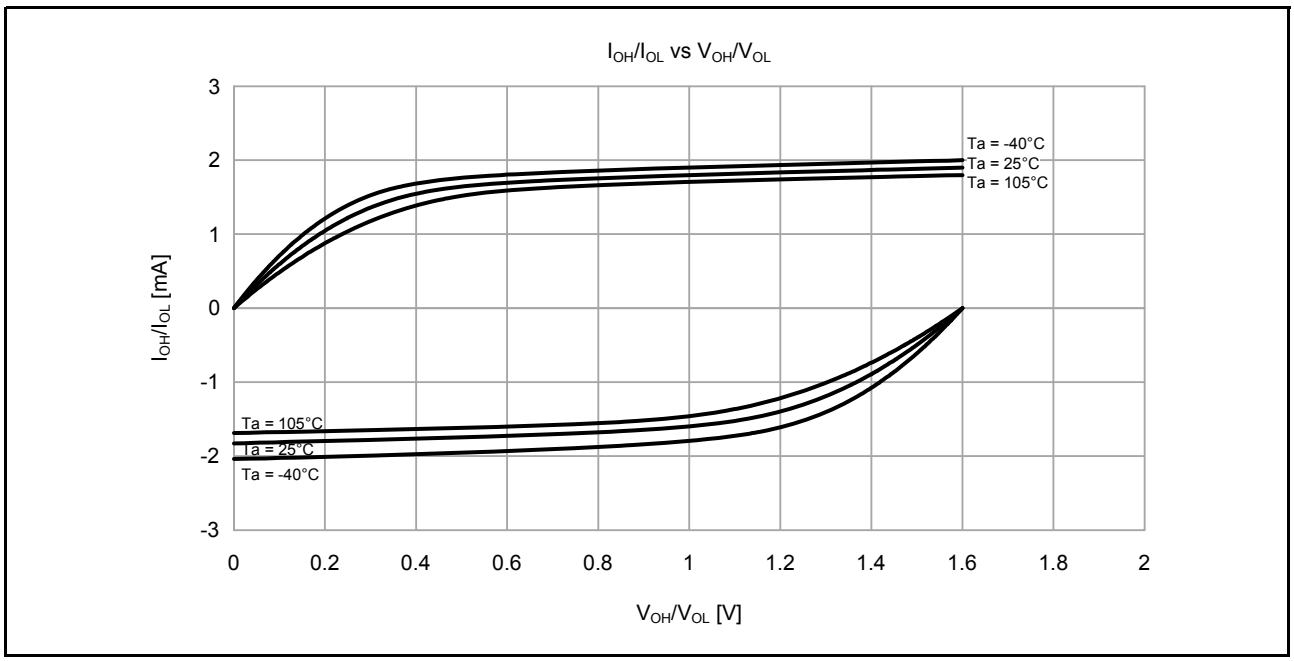

Figure 2.3 **V_{OH}/V_{OL} and I_{OH}/I_{OL} Temperature Characteristics at VCC = 1.6 V When Low drive output is Selected (Reference Data)**

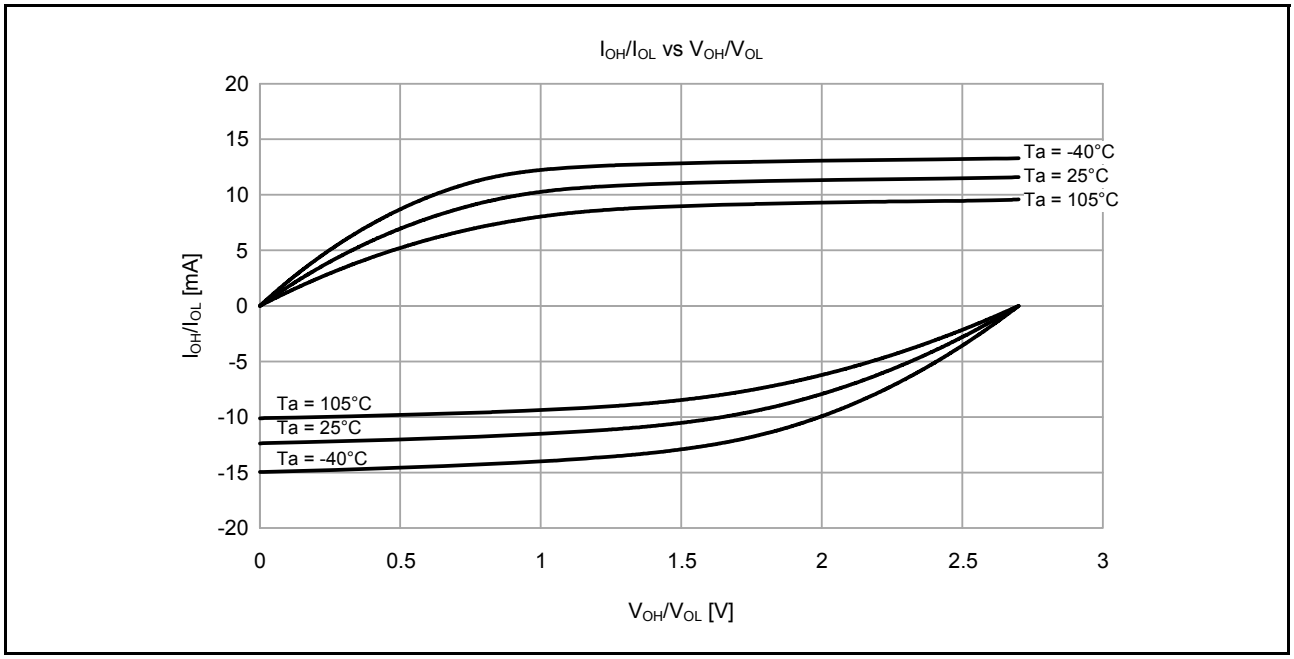

Figure 2.4 **V_{OH}/V_{OL} and I_{OH}/I_{OL} Temperature Characteristics at VCC = 2.7 V When Low drive output is Selected (Reference Data)**

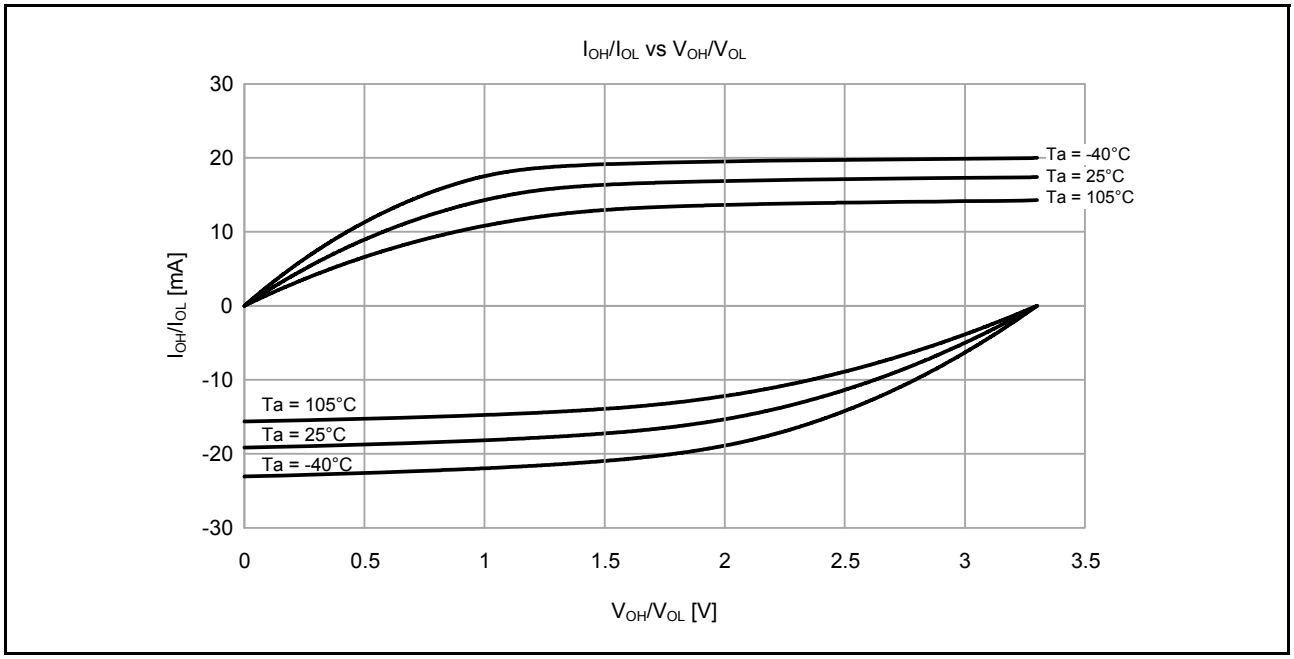

Figure 2.5 **V_{OH}/V_{OL} and I_{OH}/I_{OL} Temperature Characteristics at VCC = 3.3 V When Low drive output is Selected (Reference Data)**

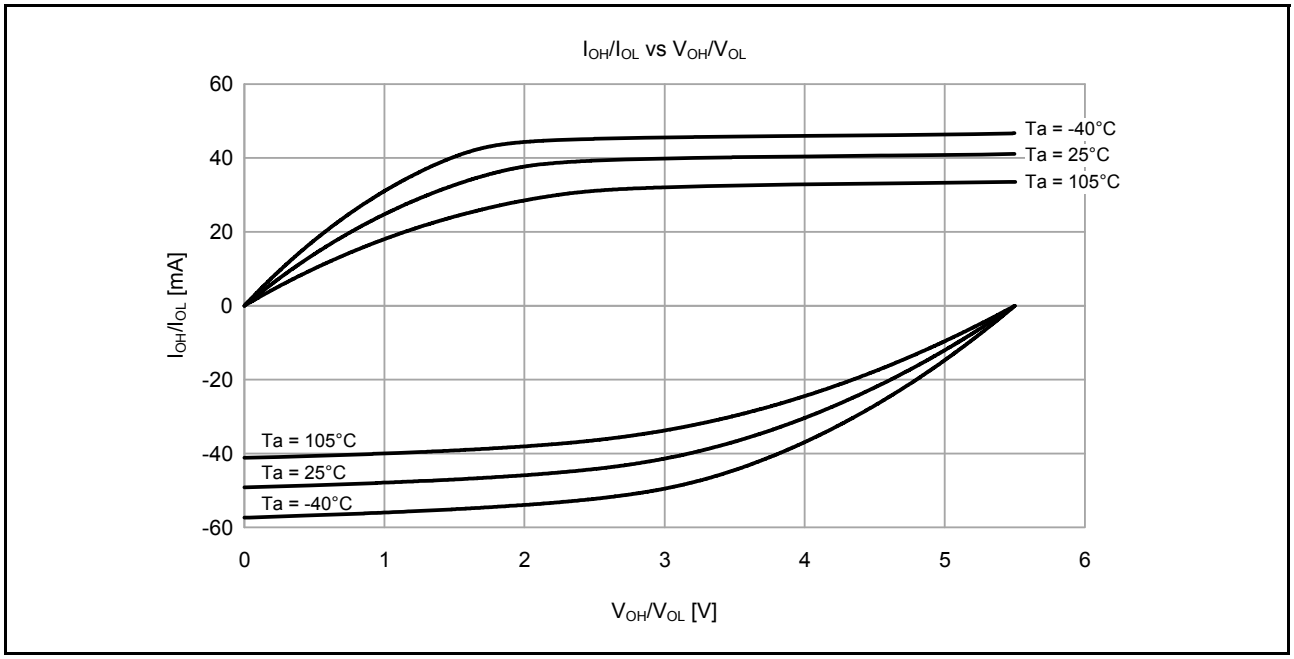

Figure 2.6 **V_{OH}/V_{OL} and I_{OH}/I_{OL} Temperature Characteristics at VCC = 5.5 V When Low drive output is Selected (Reference Data)**

2.2.6 I/O Pin Output Characteristics of Middle Drive Capacity

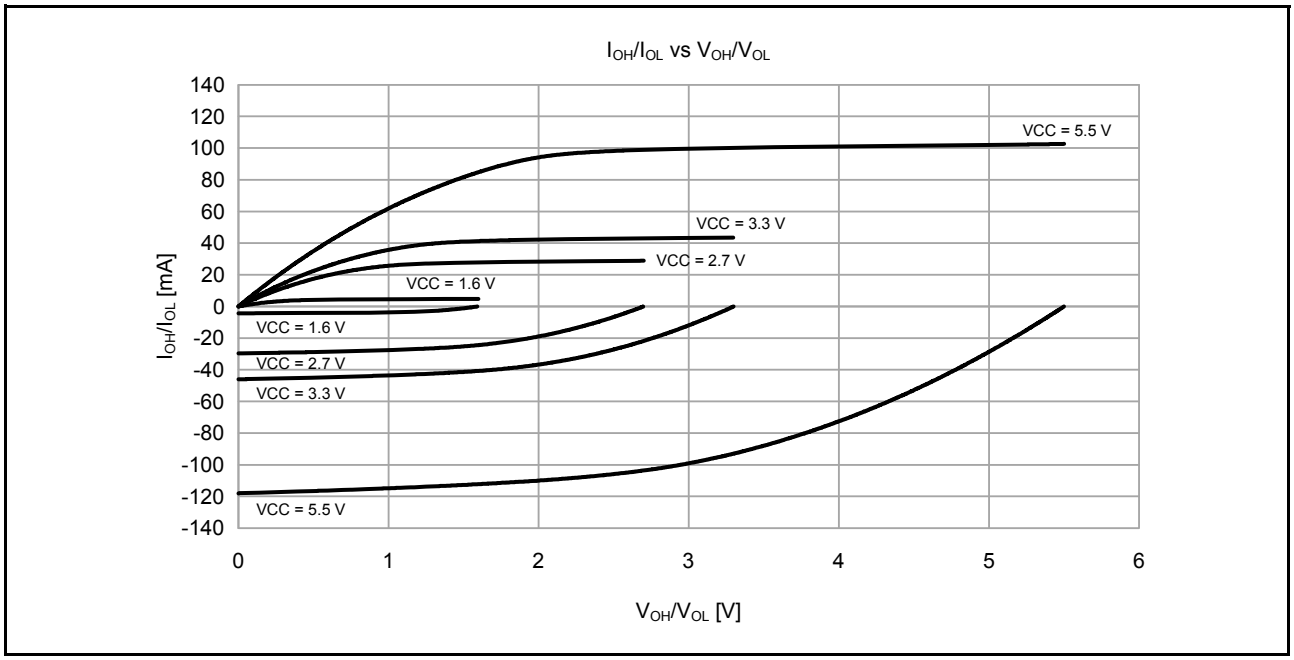

Figure 2.7 **V_{OH}/V_{OL} and I_{OH}/I_{OL} Voltage Characteristics at Ta = 25°C When Middle drive output is Selected (Reference Data)**

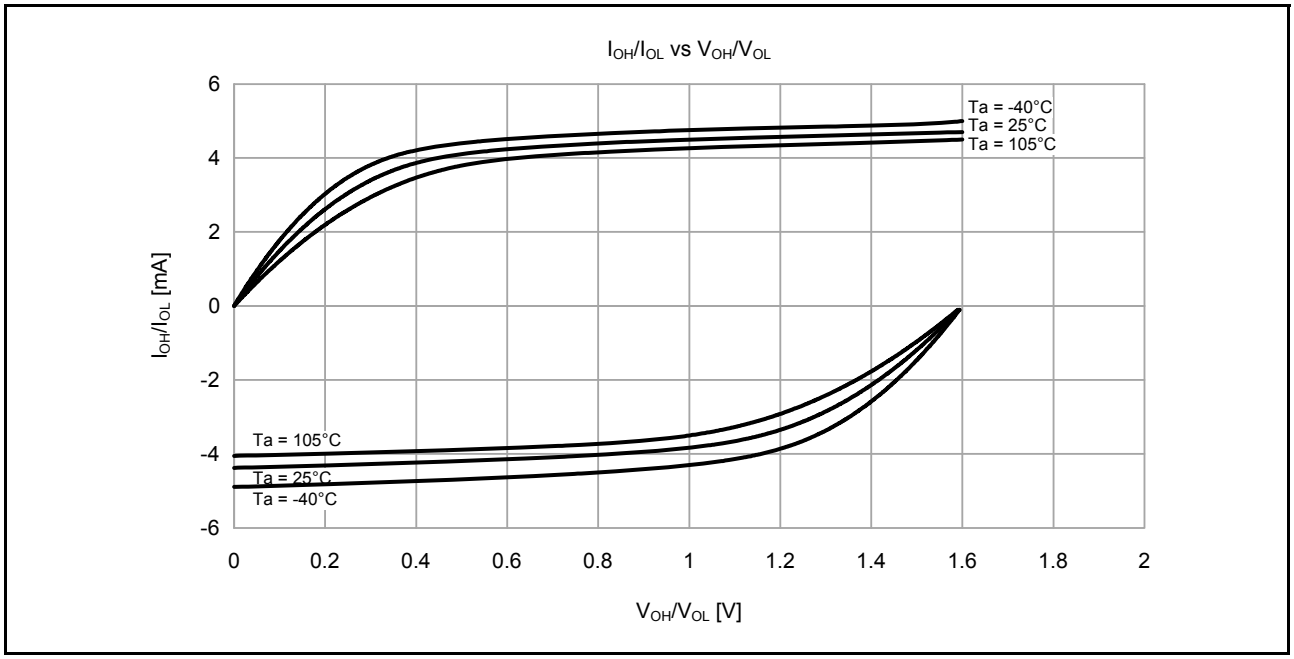

Figure 2.8 **V_{OH}/V_{OL} and I_{OH}/I_{OL} Temperature Characteristics at VCC = 1.6 V When Middle drive output is Selected (Reference Data)**

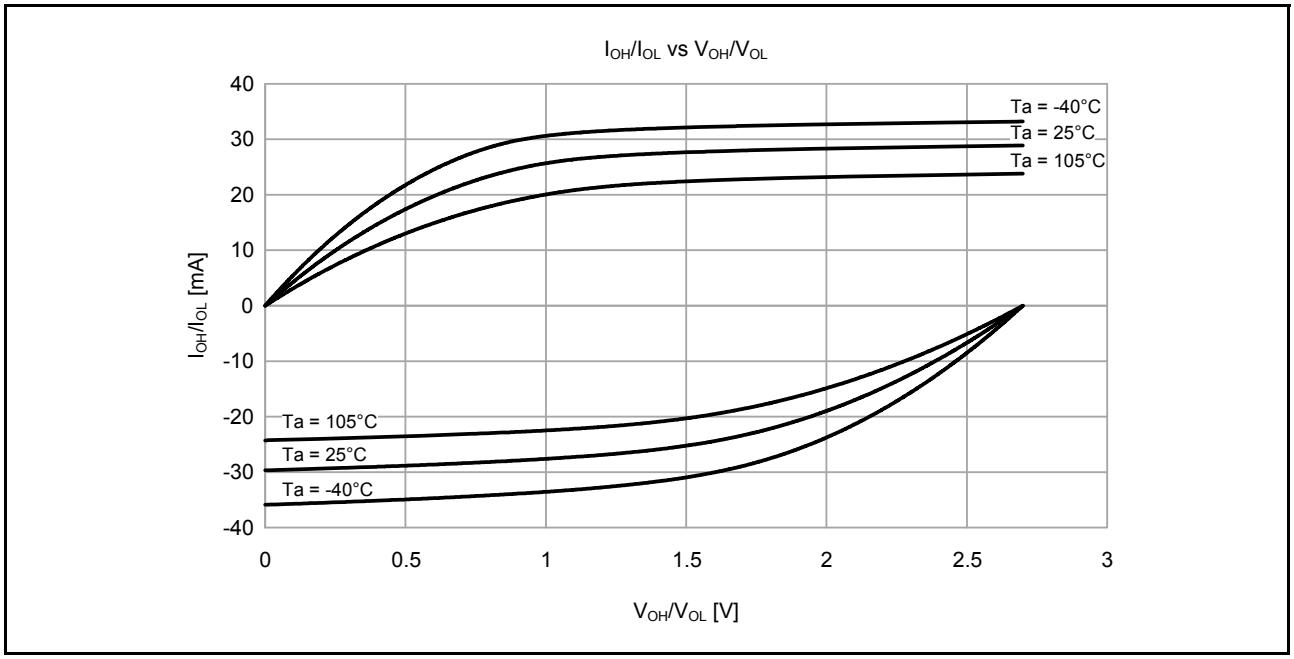

Figure 2.9 **V_{OH}/V_{OL} and I_{OH}/I_{OL} Temperature Characteristics at VCC = 2.7 V When Middle drive output is Selected (Reference Data)**

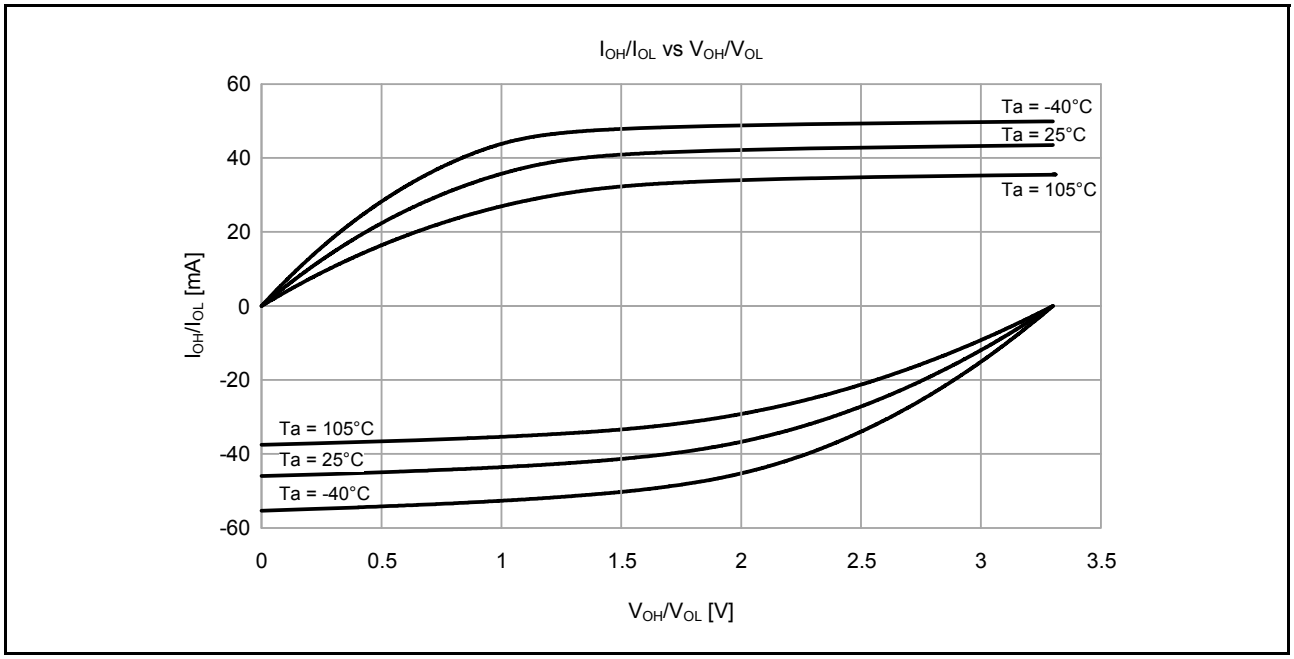

Figure 2.10 **V_{OH}/V_{OL} and I_{OH}/I_{OL} Temperature Characteristics at VCC = 3.3 V When Middle drive output is Selected (Reference Data)**

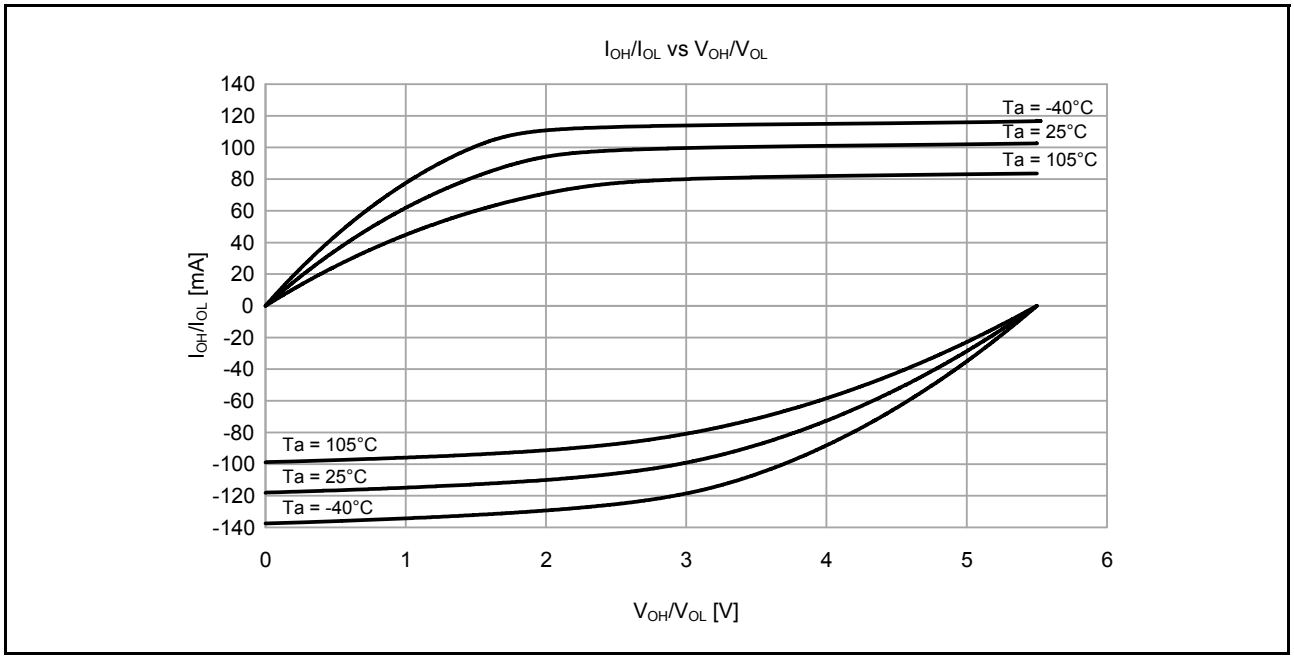

Figure 2.11 **V_{OH}/V_{OL} and I_{OH}/I_{OL} Temperature Characteristics at VCC = 5.5 V When Middle drive output is Selected (Reference Data)**

2.2.7 P408, P409 I/O Pin Output Characteristics of Middle Drive Capacity

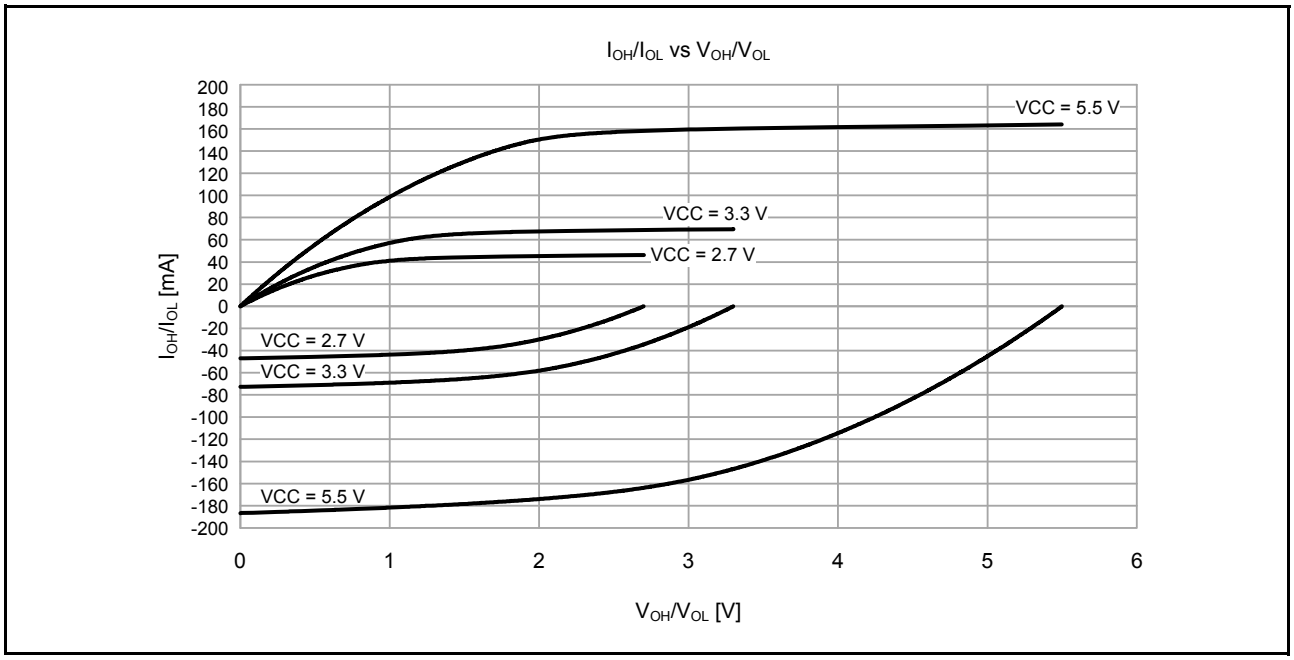

Figure 2.12 **V_{OH}/V_{OL} and I_{OH}/I_{OL} Voltage Characteristics at Ta = 25°C When Middle drive output is Selected (Reference Data)**

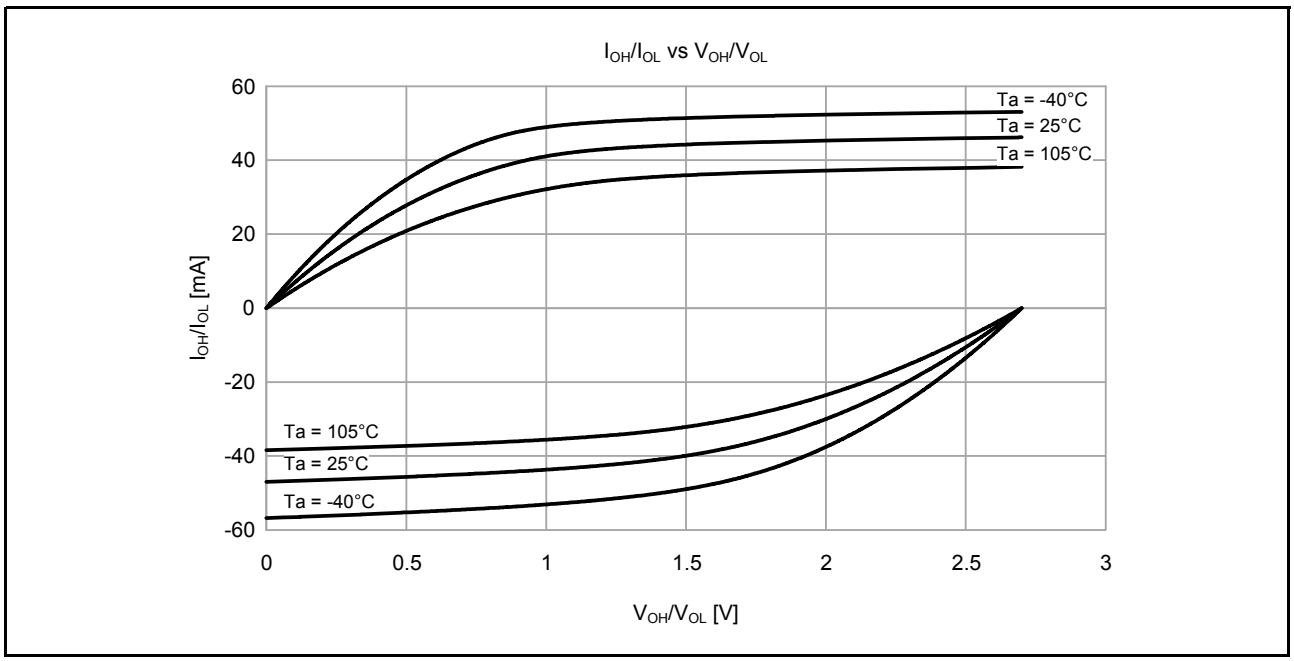

Figure 2.13 **V_{OH}/V_{OL} and I_{OH}/I_{OL} Temperature Characteristics at VCC = 2.7 V When Low drive output is Selected (Reference Data)**

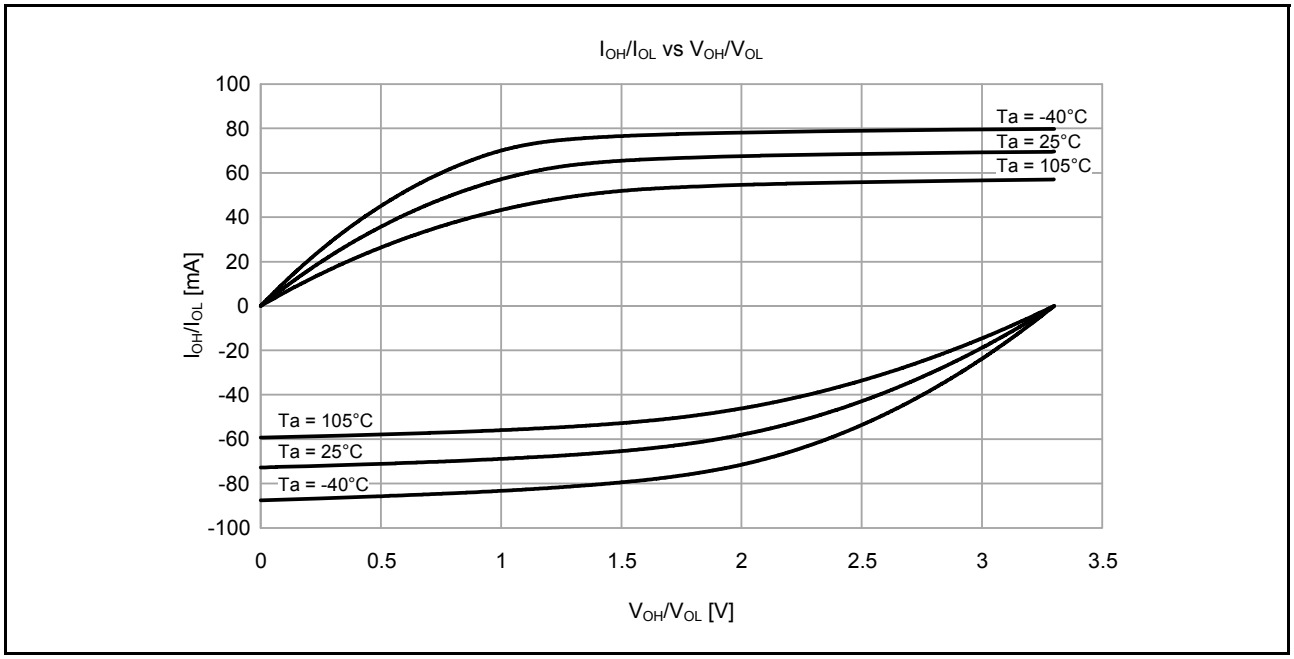

Figure 2.14 **V_{OH}/V_{OL} and I_{OH}/I_{OL} Temperature Characteristics at VCC = 3.3 V When Middle drive output is Selected (Reference Data)**

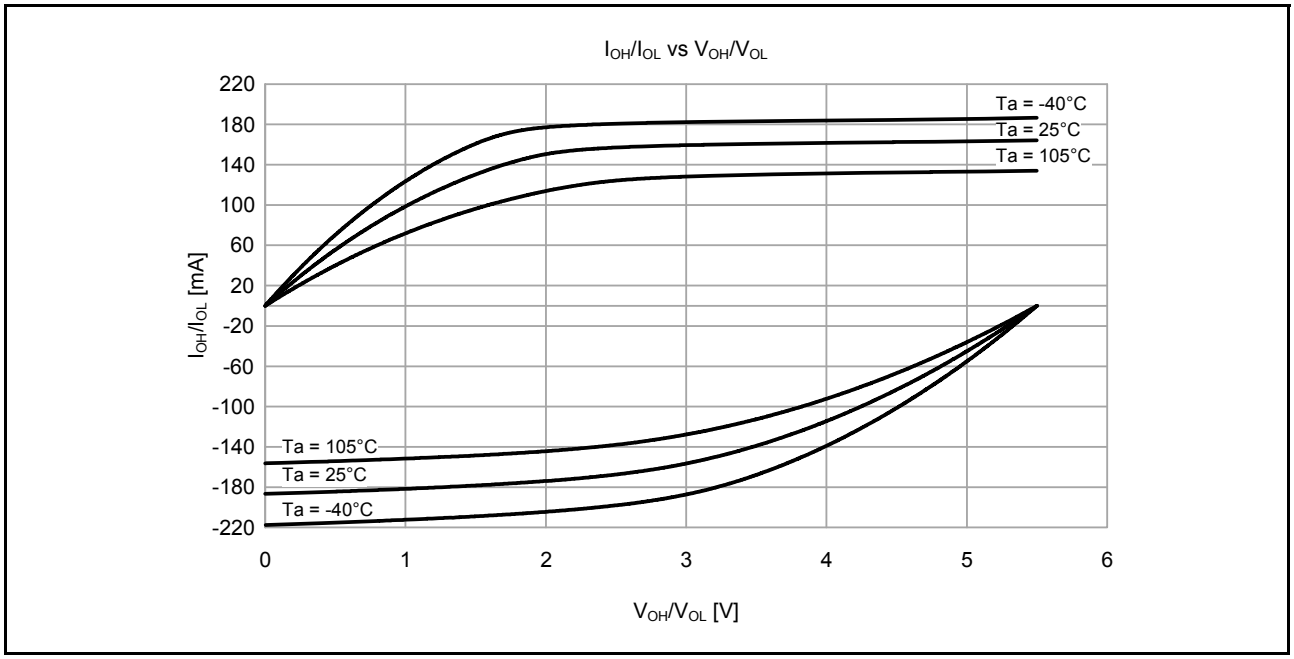

Figure 2.15 **V_{OH}/V_{OL} and I_{OH}/I_{OL} Temperature Characteristics at VCC = 5.5 V When Low drive output is Selected (Reference Data)**

2.2.8 IIC I/O Pin Output Characteristics

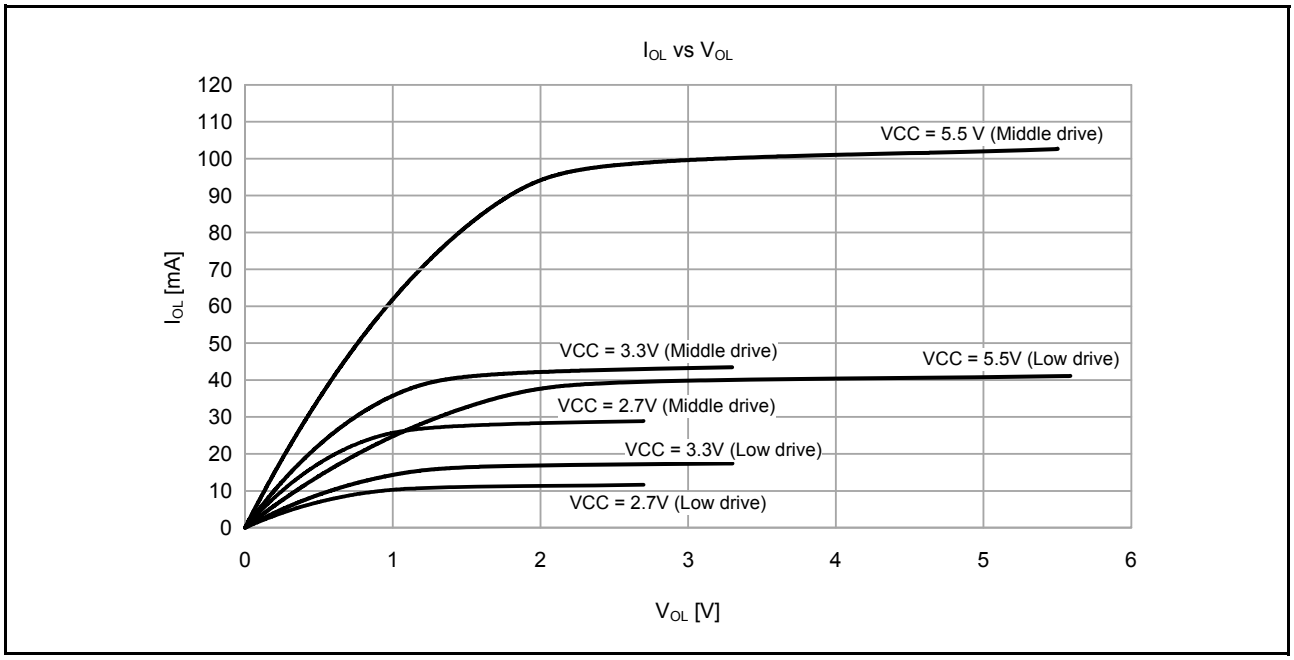

Figure 2.16 **V_{OH}/V_{OL} and I_{OH}/I_{OL} Voltage Characteristics at Ta = 25°C**

2.2.9 Operating and Standby Current

Table 2.11 Operating and standby current (1) (1/2)
Conditions: VCC = AVCC0 = 1.6 to 5.5 V

Item					Symbol	Typ*10	Max	Unit	Test conditions
Supply current*1	High-speed mode*2	Normal mode	All peripheral clock disabled, code executing from flash*5	ICLK = 48 MHz	I_{CC}	11.8	-	mA	*7
				ICLK = 32 MHz		8.6	-		
				ICLK = 16 MHz		5.1	-		
				ICLK = 8 MHz		3.4	-		
			All peripheral clock disabled, CoreMark code executing from flash*5	ICLK = 48 MHz		18.6	-		
				ICLK = 32 MHz		12.7	-		
				ICLK = 16 MHz		7.2	-		
				ICLK = 8 MHz		4.5	-		
			All peripheral clock enabled, code executing from flash*5	ICLK = 48 MHz		30.1	-		*9
				ICLK = 32 MHz		23.2	-		*8
				ICLK = 16 MHz		12.6	-		
				ICLK = 8 MHz		7.3	-		
			All peripheral clock enabled, code executing from SRAM*5	ICLK = 48 MHz		-	75.0		*9
		Sleep mode	All peripheral clock disabled*5	ICLK = 48 MHz		6.4	-		*7
				ICLK = 32 MHz		4.7	-		
				ICLK = 16 MHz		3.2	-		
				ICLK = 8 MHz		2.4	-		
			All peripheral clock enabled*5	ICLK = 48 MHz		24.7	-		*9
				ICLK = 32 MHz		19.2	-		*8
				ICLK = 16 MHz		10.7	-		
				ICLK = 8 MHz		6.4	-		
		Increase during BGO operation*6				2.5	-		-
	Middle-speed mode*2	Normal mode	All peripheral clock disabled, code executing from flash*5	ICLK = 12 MHz	I_{CC}	3.6	-	mA	*7
				ICLK = 8 MHz		3.0	-		
				ICLK = 1 MHz		1.4	-		
			All peripheral clock disabled, CoreMark code executing from flash*5	ICLK = 12 MHz		5.2	-		
				ICLK = 8 MHz		4.0	-		
				ICLK = 1 MHz		1.6	-		
			All peripheral clock enabled, code executing from flash*5	ICLK = 12 MHz		9.4	-		*8
				ICLK = 8 MHz		6.9	-		
				ICLK = 1 MHz		2.2	-		
			All peripheral clock enabled, code executing from SRAM*5	ICLK = 12 MHz		-	30.0		
		Sleep mode	All peripheral clock disabled*5	ICLK = 12 MHz		2.2	-		*7
				ICLK = 8 MHz		2.0	-		
				ICLK = 1 MHz		1.3	-		
			All peripheral clock enabled*5	ICLK = 12 MHz		7.9	-		*8
				ICLK = 8 MHz		5.9	-		
				ICLK = 1 MHz		1.3	-		
		Increase during BGO operation*6				2.5	-		-

Table 2.11 Operating and standby current (1) (2/2)

Conditions: VCC = AVCC0 = 1.6 to 5.5 V

Item					Symbol	Typ*10	Max	Unit	Test conditions
Supply current*1	Low-speed mode*3	Normal mode	All peripheral clock disabled, code executing from flash*5	ICLK = 1 MHz	I_{CC}	0.5	-	mA	*7
			All peripheral clock disabled, CoreMark code executing from flash*5	ICLK = 1 MHz		0.7	-		
			All peripheral clock enabled, code executing from flash*5	ICLK = 1 MHz		1.5	-		*8
			All peripheral clock enabled, code executing from SRAM*5	ICLK = 1 MHz		-	3.2		
		Sleep mode	All peripheral clock disabled*5	ICLK = 1 MHz		0.4	-		*7
			All peripheral clock enabled*5	ICLK = 1 MHz		1.3	-		*8
	Low-voltage mode*3	Normal mode	All peripheral clock disabled, code executing from flash*5	ICLK = 4 MHz	I_{CC}	2.5	-	mA	*7
			All peripheral clock disabled, CoreMark code executing from flash*5	ICLK = 4 MHz		3.0	-		
			All peripheral clock enabled, code executing from flash*5	ICLK = 4 MHz		4.5	-		*8
			All peripheral clock enabled, code executing from SRAM*5	ICLK = 4 MHz		-	11.2		
		Sleep mode	All peripheral clock disabled*5	ICLK = 4 MHz		2.0	-		*7
			All peripheral clock enabled*5	ICLK = 4 MHz		4.0	-		*8
	Subosc-speed mode*4	Normal mode	All peripheral clock disabled, code executing from flash*5	ICLK = 32.768 kHz	I_{CC}	13.5	-	μA	*8
			All peripheral clock enabled, code executing from flash*5	ICLK = 32.768 kHz		25.0	-		
			All peripheral clock enabled, code executing from SRAM*5	ICLK = 32.768 kHz		-	214.1		
		Sleep mode	All peripheral clock disabled*5	ICLK = 32.768 kHz		9.5	-		
			All peripheral clock enabled*5	ICLK = 32.768 kHz		21.0	-		

Note 1. Supply current values do not include output charge/discharge current from all pins. The values apply when internal pull-up MOSs are in the off state.
Note 2. The clock source is HOCO.
Note 3. The clock source is MOCO.
Note 4. The clock source is the sub-clock oscillator.
Note 5. This does not include BGO operation.
Note 6. This is the increase for programming or erasure of the ROM or flash memory for data storage during program execution.
Note 7. FCLK, BCLK, PCLKA, PCLKB, PCLKC and PCLKD are set to divided by 64.
Note 8. FCLK, BCLK, PCLKA, PCLKB, PCLKC and PCLKD are the same frequency as that of ICLK.
Note 9. FCLK, BCLK, and PCLKB are set to divided by 2 and PCLKA, PCLKC and PCLKD are the same frequency as that of ICLK.
Note 10. VCC = 3.3 V.

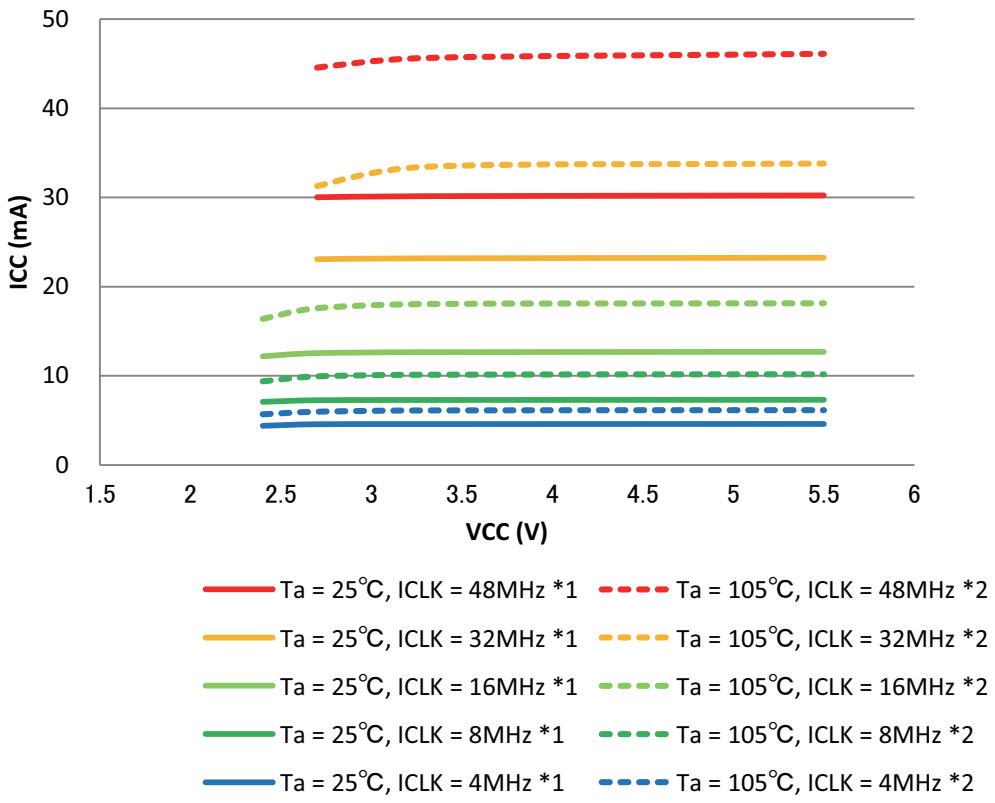

Note 1. All peripheral operations except any BGO operation are operating normally. This is the average of the actual measurements of the sample cores during product evaluation.
Note 2. All peripheral operations except any BGO operation are operating at maximum. This is the average of the actual measurements for the upper-limit samples during product evaluation.

Figure 2.17 Voltage dependency in high-speed operating mode (reference data)

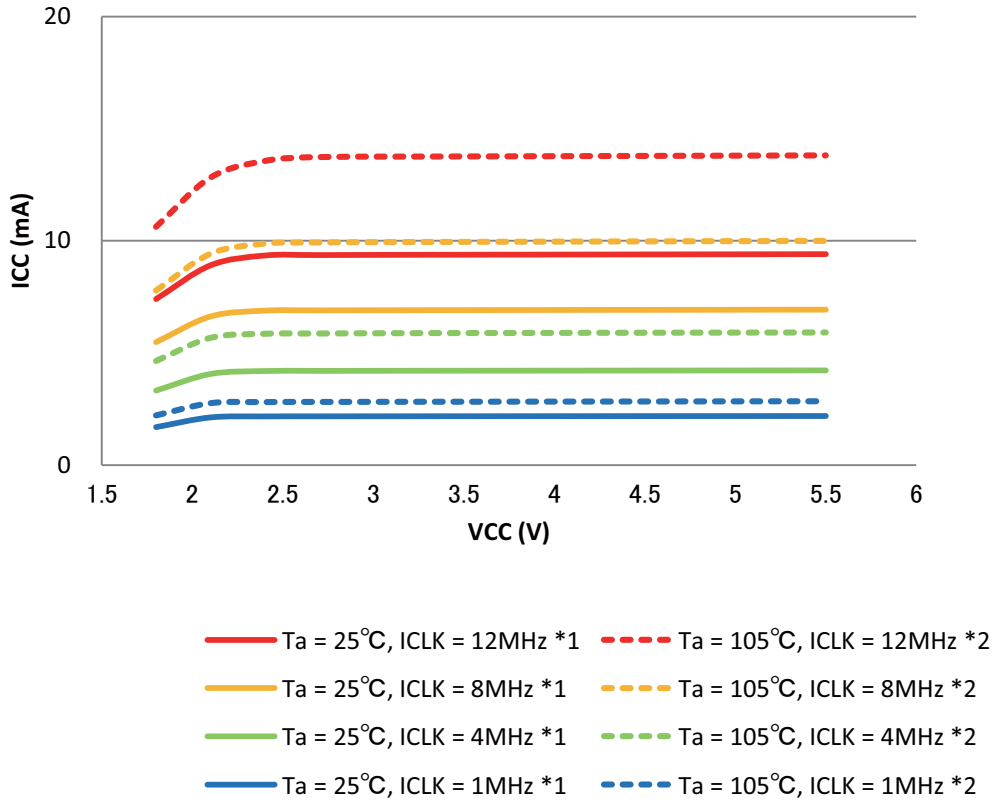

Note 1. All peripheral operations except any BGO operation are operating normally. This is the average of the actual measurements of the sample cores during product evaluation.
Note 2. All peripheral operations except any BGO operation are operating at maximum. This is the average of the actual measurements for the upper-limit samples during product evaluation.

Figure 2.18 Voltage dependency in middle-speed mode (reference data)

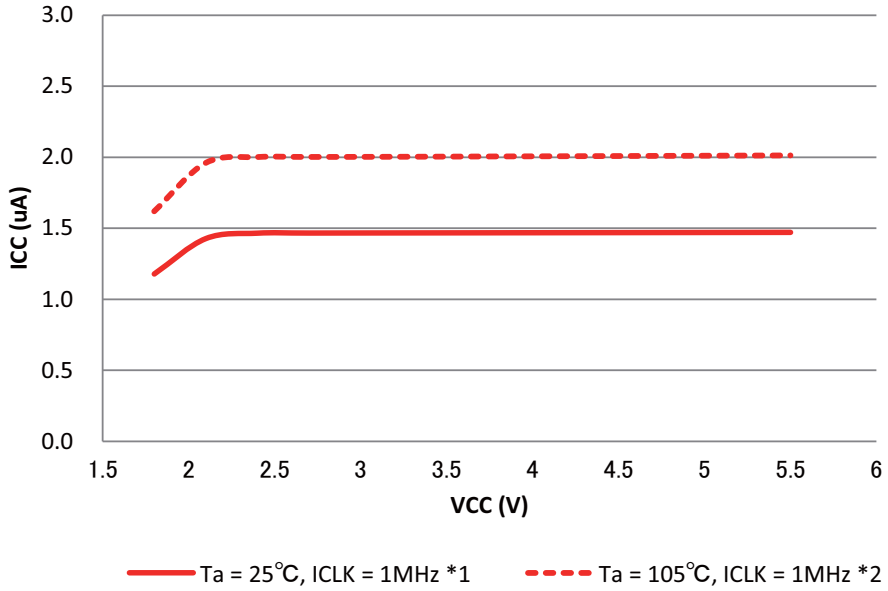

Note 1. All peripheral operations except any BGO operation are operating normally. This is the average of the actual measurements of the sample cores during product evaluation.
Note 2. All peripheral operations except any BGO operation are operating at maximum. This is the average of the actual measurements for the upper-limit samples during product evaluation.

Figure 2.19 Voltage dependency in low-speed mode (reference data)

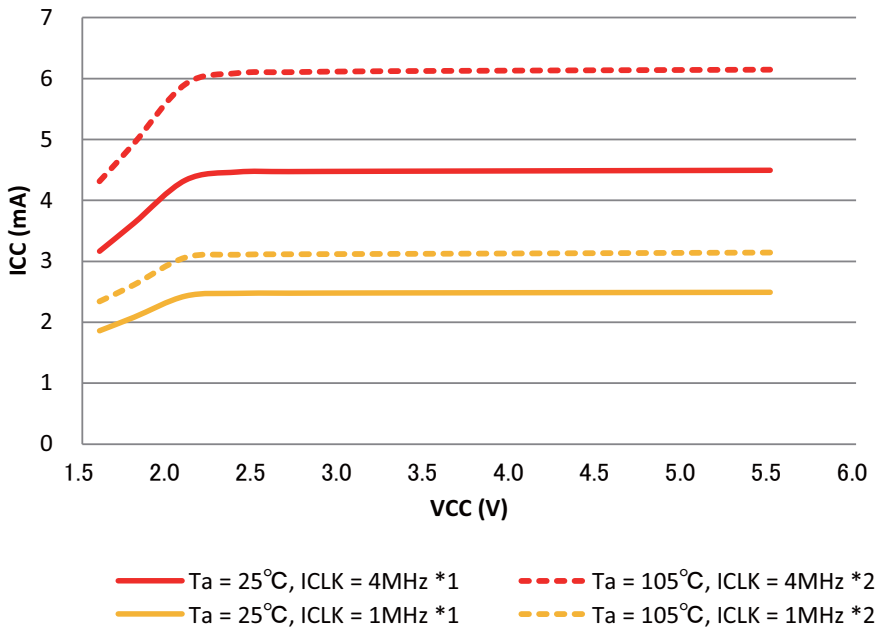

Note 1. All peripheral operations except any BGO operation are operating normally. This is the average of the actual measurements of the sample cores during product evaluation.
Note 2. All peripheral operations except any BGO operation are operating at maximum. This is the average of the actual measurements for the upper-limit samples during product evaluation.

Figure 2.20 Voltage dependency in low-voltage mode (reference data)

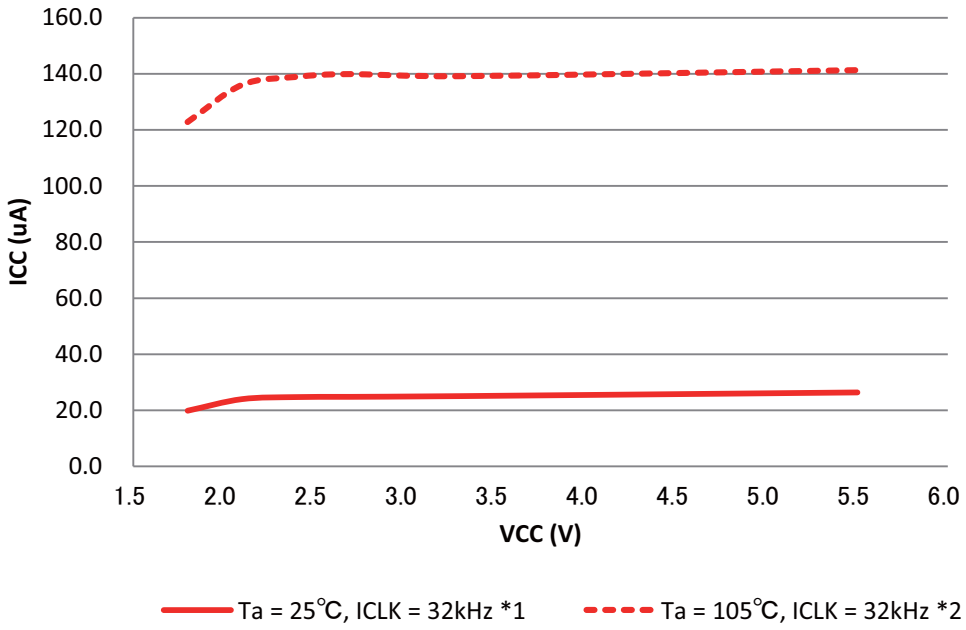

Note 1. All peripheral operations except any BGO operation are operating normally. This is the average of the actual measurements of the sample cores during product evaluation.
Note 2. All peripheral operations except any BGO operation are operating at maximum. This is the average of the actual measurements for the upper-limit samples during product evaluation.

Figure 2.21 Voltage dependency in Subosc-speed mode (reference data)

Table 2.12 Operating and standby current (2)
Conditions: VCC = AVCC0 = 1.6 to 5.5 V

Item			Symbol	Typ*4	Max	Unit	Test conditions
Supply current*1	Software Standby mode*2	T_a = 25°C	I_{CC}	0.9	6.0	μA	PSMCR.PSMC[1:0] = 01b (48-KB SRAM on)
		T_a = 55°C		1.6	12.2		
		T_a = 85°C		4.8	27.1		
		T_a = 105°C		12.2	66.7		
		T_a = 25°C		1.1	7.5		PSMCR.PSMC[1:0] = 00b (All SRAM on)
		T_a = 55°C		2.2	17.0		
		T_a = 85°C		7.5	43.3		
		T_a = 105°C		19.6	105.9		
	Increment for RTC operation with low-speed on-chip oscillator*3			0.5	-		-
	Increment for RTC operation with sub-clock oscillator*3			0.5	-		SOMCR.SODRV[1:0] are 11b (Low power mode 3)
				1.6	-		SOMCR.SODRV[1:0] are 00b (Normal mode)

Note 1. Supply current values do not include output charge/discharge current from all pins. The values apply when internal pull-up MOSs are in the off state.
Note 2. The IWDT and LVD are not operating.
Note 3. Includes the current of sub-oscillation circuit or low-speed on-chip oscillator.
Note 4. VCC = 3.3 V.

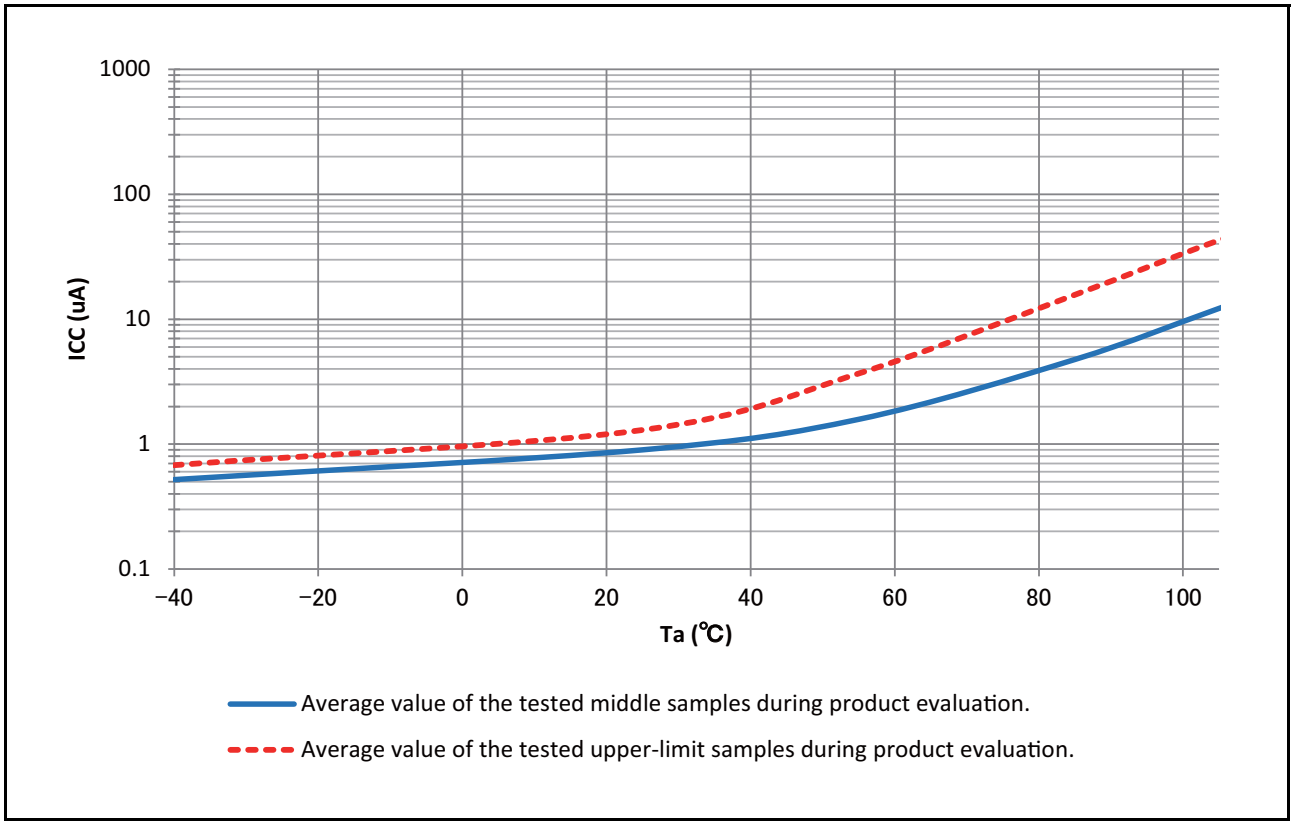

Figure 2.22 Temperature dependency in Software Standby mode 48-KB SRAM on (reference data)

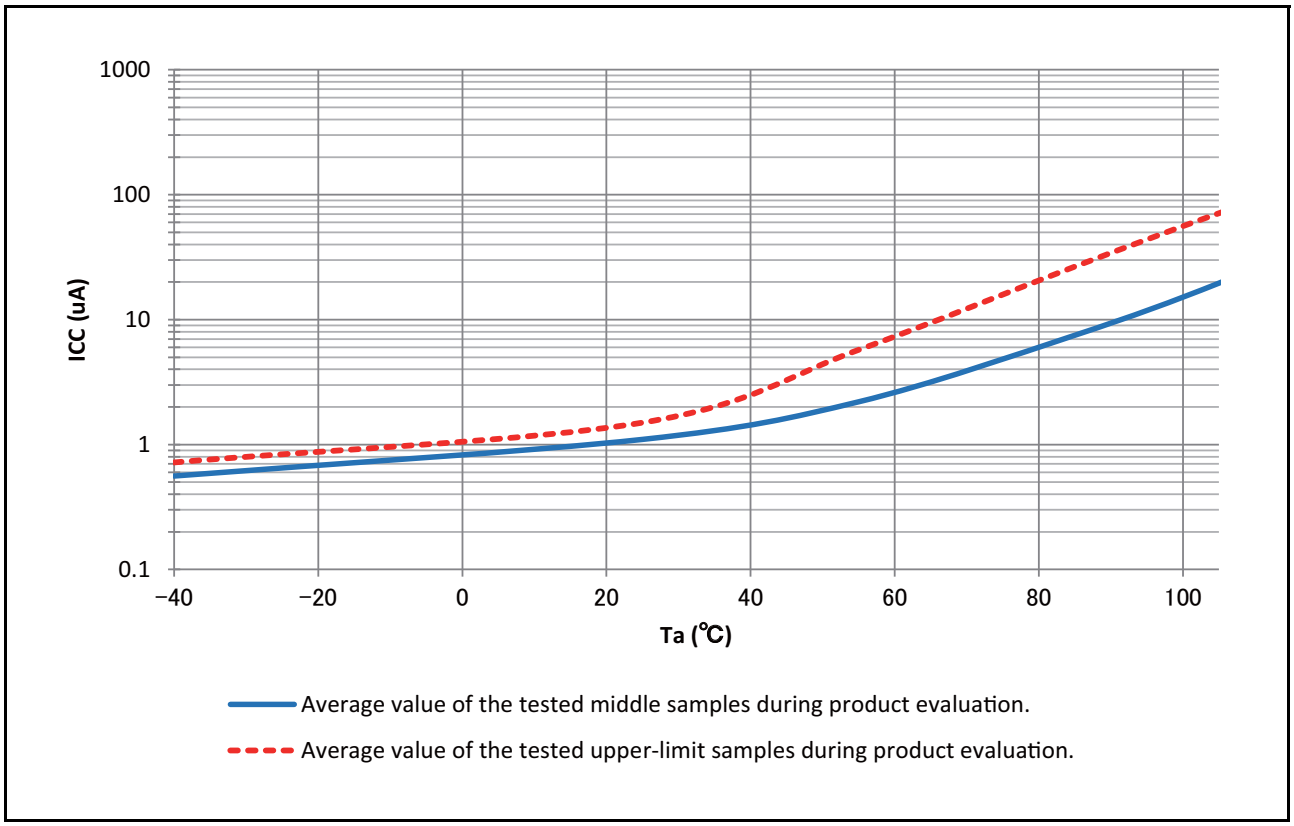

Figure 2.23 Temperature dependency in Software Standby mode all SRAM on (reference data)

Table 2.13 Operating and standby current (3)

Conditions: VCC = AVCC0 = 0V, VBATT = 1.6 to 3.6 V, VSS = AVSS0 = 0V

Item			Symbol	Typ	Max	Unit	Test conditions
Supply current*Note:	RTC operation when VCC is off	T_a = 25°C	I_{CC}	1.1	-	μA	VBATT = 2.0 V SOMCR.SORDRV[1:0] = 11b (Low power mode 3)
		T_a = 55°C		1.2	-		
		T_a = 85°C		1.4	-		
		T_a = 105°C		1.6	-		
		T_a = 25°C		1.2	-		VBATT = 3.3 V SOMCR.SORDRV[1:0] = 11b (Low power mode 3)
		T_a = 55°C		1.3	-		
		T_a = 85°C		1.5	-		
		T_a = 105°C		1.7	-		
		T_a = 25°C		1.8	-		VBATT = 2.0 V SOMCR.SORDRV[1:0] = 00b (Normal mode)
		T_a = 55°C		2.1	-		
		T_a = 85°C		2.4	-		
		T_a = 105°C		2.7	-		
		T_a = 25°C		1.9	-		VBATT = 3.3 V SOMCR.SORDRV[1:0] = 00b (Normal mode)
		T_a = 55°C		2.2	-		
		T_a = 85°C		2.5	-		
		T_a = 105°C		2.8	-		

Note: Supply current values do not include output charge/discharge current from all pins. The values apply when internal pull-up MOSs are in the off state.

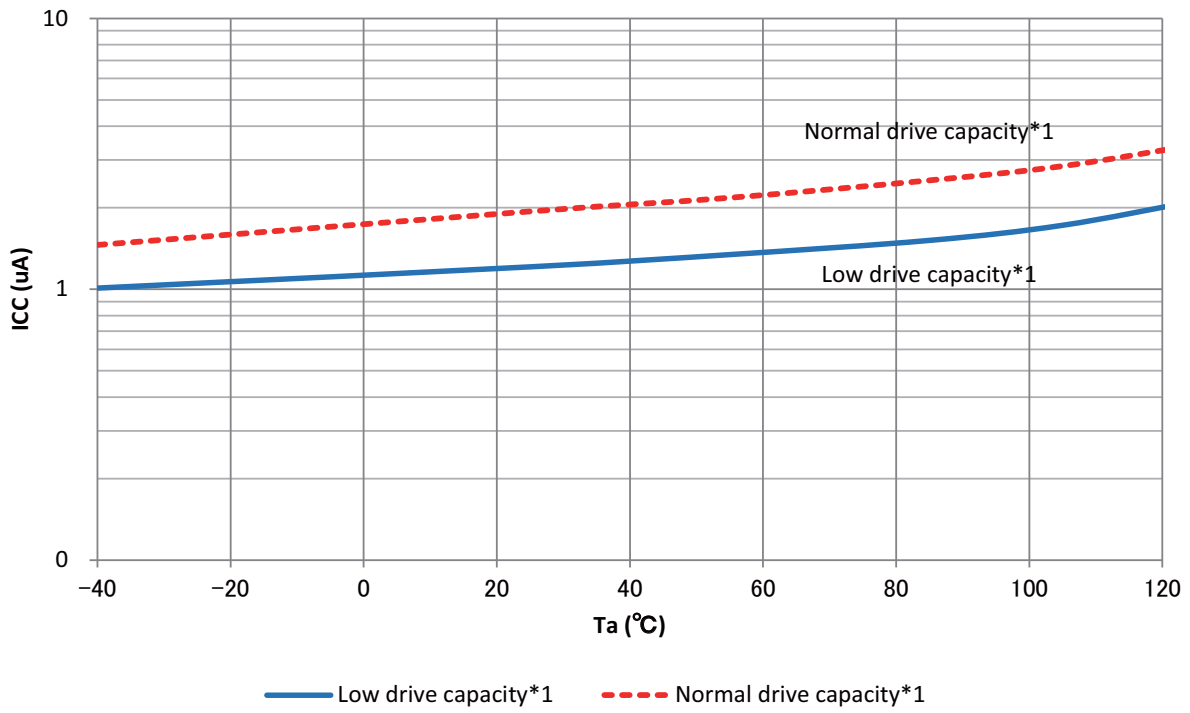

Note 1. Average value of the tested middle sample during product evaluation.

Figure 2.24 Temperature dependency of RTC operation with VCC off (reference data)

Table 2.14 Operating and standby current (4)

Conditions: VCC = AVCC0 = 1.6 to 5.5 V, VREFH0 = 2.7 V to AVCC0

Item			Symbol	Min	Typ	Max	Unit	Test conditions
Analog power supply current	During A/D conversion (at high-speed conversion)		I_{AVCC}	-	-	3.0	mA	-
	During A/D conversion (at low-power conversion)			-	-	1.0	mA	-
	During D/A conversion (per channel)*1			-	0.4	0.8	mA	-
	Waiting for A/D and D/A conversion (all units)			-	-	1.0	μA	-
Reference power supply current	During A/D conversion (at high-speed conversion)		I_{REFH0}	-	-	150	μA	-
	Waiting for A/D conversion (all units)			-	-	60	nA	-
	During D/A conversion		I_{REFH}	-	50	100	μA	-
	Waiting for D/A conversion (all units)			-	-	100	μA	-
Temperature sensor			I_{TNS}	-	75	-	μA	-
Low-Power Analog Comparator operating current	Window mode		I_{CMPLP}	-	15	-	μA	-
	Comparator high-speed mode			-	10	-	μA	-
	Comparator low-speed mode			-	2	-	μA	-
High-Speed Analog Comparator operating current			I_{CMPHS}	-	70	100	μA	AVCC0 ≥ 2.7 V
Operational Amplifier operating current	Low power mode	1 unit operating	I_{AMP}	-	2.5	4.0	μA	-
		2 units operating		-	4.5	8.0	μA	-
		3 units operating		-	6.5	11.0	μA	-
		4 units operating		-	8.5	14.0	μA	-
	High speed mode	1 unit operating		-	140	220	μA	-
		2 units operating		-	280	410	μA	-
		3 units operating		-	420	600	μA	-
		4 units operating		-	560	780	μA	-
LCD operating current	External resistance division method $f_{LCD} = f_{SUB}$ = 128 Hz, 1/3 bias, and 4-time slice		I_{LCD1}*5	-	0.34	-	μA	-
	Internal voltage boosting method $f_{LCD} = f_{SUB}$ = 128 Hz, 1/3 bias, and 4-time slice		I_{LCD2}*5	-	0.92	-	μA	-
	Capacitor split method $f_{LCD} = f_{SUB}$ = 128 Hz, 1/3 bias, and 4-time slice		I_{LCD3}*5	-	0.19	-	μA	-
USB operating current	During USB communication operation under the following settings and conditions: • Host controller operation is set to full-speed mode Bulk OUT transfer (64 bytes) × 1, bulk IN transfer (64 bytes) × 1 • Connect peripheral devices via a 1-meter USB cable from the USB port.		I_{USBH}*2	-	4.3 (VCC) 0.9 (VCC_USB)*4	-	mA	-
	During USB communication operation under the following settings and conditions: • Function controller operation is set to full-speed mode Bulk OUT transfer (64 bytes) × 1, bulk IN transfer (64 bytes) × 1 • Connect the host device via a 1-meter USB cable from the USB port.		I_{USBF}*2	-	3.6 (VCC) 1.1 (VCC_USB)*4	-	mA	-
	During suspended state under the following setting and conditions: • Function controller operation is set to full-speed mode (pull up the USB_DP pin) • Software standby mode • Connect the host device via a 1-meter USB cable from the USB port.		I_{SUSP}*3	-	0.35 (VCC) 170 (VCC_USB)*4	-	μA	-

Note 1. The reference power supply current is included in the power supply current value for D/A conversion.
Note 2. Current consumed only by the USBFS.
Note 3. Includes the current supplied from the pull-up resistor of the USB_DP pin to the pull-down resistor of the host device, in addition to the current consumed by the MCU during the suspended state.
Note 4. When VCC = VCC_USB = 3.3 V.
Note 5. Current flowing only to the LCD controller. Not including the current that flows through the LCD panel.

2.2.10 VCC Rise and Fall Gradient and Ripple Frequency

Table 2.15 Rise and fall gradient characteristics

Conditions: VCC = AVCC0 = 0 to 5.5 V

Item		Symbol	Min	Typ	Max	Unit	Test conditions
Power-on VCC rising gradient	Voltage monitor 0 reset disabled at startup	SrVCC	0.02	-	2	ms/V	-
	Voltage monitor 0 reset enabled at startup*1, *2		0.02	-	-		

Note 1. When OFS1.LVDAS = 0.

Note 2. Turn the power supply voltage on according to the normal startup rising gradient because the register settings set by OFS1 are not read in boot mode.

Table 2.16 Rising and falling gradient and ripple frequency characteristics

Conditions: VCC = AVCC0 = VCC_USB = 1.6 to 5.5 V

The ripple voltage must meet the allowable ripple frequency $f_{r(VCC)}$ within the range between the VCC upper limit (5.5 V) and lower limit (1.6 V).

When VCC change exceeds VCC ±10%, the allowable voltage change rising/falling gradient dt/dVCC must be met.

Item	Symbol	Min	Typ	Max	Unit	Test conditions
Allowable ripple frequency	$f_{r\ (VCC)}$	-	-	10	kHz	Figure 2.25 $V_{r\ (VCC)} \leq$ VCC × 0.2
		-	-	1	MHz	Figure 2.25 $V_{r\ (VCC)} \leq$ VCC × 0.08
		-	-	10	MHz	Figure 2.25 $V_{r\ (VCC)} \leq$ VCC × 0.06
Allowable voltage change rising and falling gradient	dt/dVCC	1.0	-	-	ms/V	When VCC change exceeds VCC ±10%

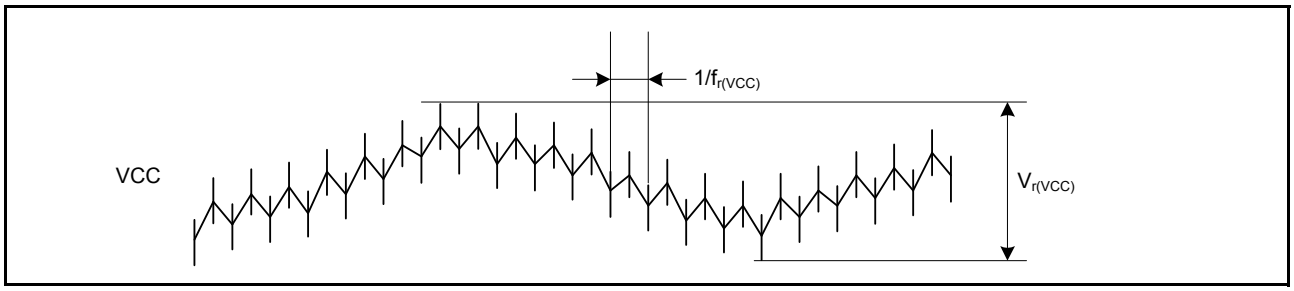

Figure 2.25 Ripple waveform

2.3 AC Characteristics

2.3.1 Frequency

Table 2.17 Operation frequency value in high-speed operating mode

Conditions: VCC = AVCC0 = 2.4 to 5.5 V

Item			Symbol	Min	Typ	Max	Unit
Operation frequency	System clock (ICLK)*4	2.7 to 5.5 V	f	0.032768	-	48	MHz
		2.4 to 2.7 V		0.032768	-	16	
	FlashIF clock (FCLK)*1, *2, *4	2.7 to 5.5 V		0.032768	-	32	
		2.4 to 2.7 V		0.032768	-	16	
	Peripheral module clock (PCLKA)*4	2.7 to 5.5 V		-	-	48	
		2.4 to 2.7 V		-	-	16	
	Peripheral module clock (PCLKB)*4	2.7 to 5.5 V		-	-	32	
		2.4 to 2.7 V		-	-	16	
	Peripheral module clock (PCLKC)*3, *4	2.7 to 5.5 V		-	-	64	
		2.4 to 2.7 V		-	-	16	
	Peripheral module clock (PCLKD)*4	2.7 to 5.5 V		-	-	64	
		2.4 to 2.7 V		-	-	16	
	External bus clock (BCLK)*4	2.7 to 5.5 V		-	-	24	
		2.4 to 2.7 V		-	-	16	
	EBCLK pin output	2.7 to 5.5 V		-	-	12	
		2.4 to 2.7 V		-	-	8	

Note 1. The lower-limit frequency of FCLK is 1 MHz while programming or erasing the flash memory. When using FCLK for programming or erasing the flash memory at below 4 MHz, the frequency can be set to 1 MHz, 2 MHz, or 3 MHz. A non-integer frequency such as 1.5 MHz cannot be set.

Note 2. The frequency accuracy of FCLK must be ±3.5% while programming or erasing the flash memory. Confirm the frequency accuracy of the clock source.

Note 3. The lower-limit frequency of PCLKC is 4 MHz at 2.4 V or above and 1 MHz at below 2.4 V when the 14-bit A/D converter is in use.

Note 4. See section 9, Clock Generation Circuit in User's Manual for the relationship of frequencies between ICLK, PCLKA, PCLKB, PCLKC, PCLKD, FCLK, and BCLK.

Table 2.18 Operation frequency value in middle-speed mode

Conditions: VCC = AVCC0 = 1.8 to 5.5 V

Item			Symbol	Min	Typ	Max	Unit
Operation frequency	System clock (ICLK)*4	2.7 to 5.5 V	f	0.032768	-	12	MHz
		2.4 to 2.7 V		0.032768	-	12	
		1.8 to 2.4 V		0.032768	-	8	
	FlashIF clock (FCLK)*1, *2, *4	2.7 to 5.5 V		0.032768	-	12	
		2.4 to 2.7 V		0.032768	-	12	
		1.8 to 2.4 V		0.032768	-	8	
	Peripheral module clock (PCLKA)*4	2.7 to 5.5 V		-	-	12	
		2.4 to 2.7 V		-	-	12	
		1.8 to 2.4 V		-	-	8	
	Peripheral module clock (PCLKB)*4	2.7 to 5.5 V		-	-	12	
		2.4 to 2.7 V		-	-	12	
		1.8 to 2.4 V		-	-	8	
	Peripheral module clock (PCLKC)*3, *4	2.7 to 5.5 V		-	-	12	
		2.4 to 2.7 V		-	-	12	
		1.8 to 2.4 V		-	-	8	
	Peripheral module clock (PCLKD)*4	2.7 to 5.5 V		-	-	12	
		2.4 to 2.7 V		-	-	12	
		1.8 to 2.4 V		-	-	8	
	External bus clock (BCLK)*4	2.7 to 5.5 V		-	-	12	
		2.4 to 2.7 V		-	-	12	
		1.8 to 2.4 V		-	-	8	
	EBCLK pin output	2.7 to 3.6 V		-	-	12	
		2.4 to 2.7 V		-	-	8	
		1.8 to 2.4 V		-	-	8	

Note 1. The lower-limit frequency of FCLK is 1 MHz while programming or erasing the flash memory. When using FCLK for programming or erasing the flash memory at below 4 MHz, the frequency can be set to 1 MHz, 2 MHz, or 3 MHz. A non-integer frequency such as 1.5 MHz cannot be set.

Note 2. The frequency accuracy of FCLK must be ±3.5% while programming or erasing the flash memory. Confirm the frequency accuracy of the clock source.

Note 3. The lower-limit frequency of PCLKC is 4 MHz at 2.4 V or above and 1 MHz at below 2.4 V when the 14-bit A/D converter is in use.

Note 4. See section 9, Clock Generation Circuit in User's Manual for the relationship of frequencies between ICLK, PCLKA, PCLKB, PCLKC, PCLKD, FCLK, and BCLK.

Table 2.19 Operation frequency value in low-speed mode

Conditions: VCC = AVCC0 = 1.8 to 5.5 V

Item			Symbol	Min	Typ	Max	Unit
Operation frequency	System clock (ICLK)*3	1.8 to 5.5 V	f	0.032768	-	1	MHz
	FlashIF clock (FCLK)*1, *3	1.8 to 5.5 V		0.032768	-	1	
	Peripheral module clock (PCLKA)*3	1.8 to 5.5 V		-	-	1	
	Peripheral module clock (PCLKB)*3	1.8 to 5.5 V		-	-	1	
	Peripheral module clock (PCLKC)*2, *3	1.8 to 5.5 V		-	-	1	
	Peripheral module clock (PCLKD)*3	1.8 to 5.5 V		-	-	1	
	External bus clock (BCLK)*3	1.8 to 5.5 V		-	-	1	
	EBCLK pin output	1.8 to 5.5 V		-	-	1	

Note 1. The lower-limit frequency of FCLK is 1 MHz while programming or erasing the flash memory.

Note 2. The lower-limit frequency of PCLKC is 1 MHz when the A/D converter is in use.

Note 3. See section 9, Clock Generation Circuit in User's Manual for the relationship of frequencies between ICLK, PCLKA, PCLKB, PCLKC, PCLKD, FCLK, and BCLK.

Table 2.20 Operation frequency value in low-voltage mode

Conditions: VCC = AVCC0 = 1.6 to 5.5 V

Item			Symbol	Min	Typ	Max	Unit
Operation frequency	System clock (ICLK)*4	1.6 to 5.5 V	f	0.032768	-	4	MHz
	FlashIF clock (FCLK)*1, *2, *4	1.6 to 5.5 V		0.032768	-	4	
	Peripheral module clock (PCLKA)*4	1.6 to 5.5 V		-	-	4	
	Peripheral module clock (PCLKB)*4	1.6 to 5.5 V		-	-	4	
	Peripheral module clock (PCLKC)*3, *4	1.6 to 5.5 V		-	-	4	
	Peripheral module clock (PCLKD)*4	1.6 to 5.5 V		-	-	4	
	External bus clock (BCLK)*4	1.6 to 5.5 V		-	-	4	
	EBCLK pin output	1.8 to 5.5 V		-	-	4	
		1.6 to 1.8 V		-	-	2	

Note 1. The lower-limit frequency of FCLK is 1 MHz while programming or erasing the flash memory. When using FCLK for programming or erasing the flash memory at below 4 MHz, the frequency can be set to 1 MHz, 2 MHz, or 3 MHz. A non-integer frequency such as 1.5 MHz cannot be set.

Note 2. The frequency accuracy of FCLK must be ±3.5% while programming or erasing the flash memory. Confirm the frequency accuracy of the clock source.

Note 3. The lower-limit frequency of PCLKC is 4 MHz at 2.4 V or above and 1 MHz at below 2.4 V when the 14-Bit A/D converter is in use.

Note 4. See section 9, Clock Generation Circuit in User's Manual for the relationship of frequencies between ICLK, PCLKA, PCLKB, PCLKC, PCLKD, FCLK, and BCLK.

Table 2.21 Operation frequency value in Subosc-speed mode

Conditions: VCC = AVCC0 = 1.8 to 5.5 V

Item			Symbol	Min	Typ	Max	Unit
Operation frequency	System clock (ICLK)*3	1.8 to 5.5 V	f	27.8528	32.768	37.6832	kHz
	FlashIF clock (FCLK)*1, *3	1.8 to 5.5 V		27.8528	32.768	37.6832	
	Peripheral module clock (PCLKA)*3	1.8 to 5.5 V		-	-	37.6832	
	Peripheral module clock (PCLKB)*3	1.8 to 5.5 V		-	-	37.6832	
	Peripheral module clock (PCLKC)*2, *3	1.8 to 5.5 V		-	-	37.6832	
	Peripheral module clock (PCLKD)*3	1.8 to 5.5 V		-	-	37.6832	
	External bus clock (BCLK)*3	1.8 to 5.5 V		-	-	37.6832	
	EBCLK pin output	1.8 to 5.5 V		-	-	37.6832	

Note 1. Programming and erasing the flash memory is not possible.

Note 2. The 14-bit A/D converter cannot be used.

Note 3. See section 9, Clock Generation Circuit in User's Manual for the relationship of frequencies between ICLK, PCLKA, PCLKB, PCLKC, PCLKD, FCLK, and BCLK.

2.3.2 Clock Timing

Table 2.22 Clock timing (1/2)

Item		Symbol	Min	Typ	Max	Unit	Test conditions
EBCLK pin output cycle time	VCC = 2.7 V or above	t_{Bcyc}	83.3	-	-	ns	Figure 2.26
	VCC = 1.8 V or above		125	-	-		
	VCC = 1.6 V or above		500	-	-		
EBCLK pin output high pulse width	VCC = 2.7 V or above	t_{CH}	20	-	-	ns	
	VCC = 1.8 V or above		30	-	-		
	VCC = 1.6 V or above		150	-	-		
EBCLK pin output low pulse width	VCC = 2.7 V or above	t_{CL}	20	-	-	ns	
	VCC = 1.8 V or above		30	-	-		
	VCC = 1.6 V or above		150	-	-		
EBCLK pin output rise time	VCC = 2.7 V or above	t_{Cr}	-	-	15	ns	
	VCC = 2.4 V or above		-	-	25		
	VCC = 1.8 V or above		-	-	30		
	VCC = 1.6 V or above		-	-	50		
EBCLK pin output fall time	VCC = 2.7 V or above	t_{Cf}	-	-	15	ns	
	VCC = 2.4 V or above		-	-	25		
	VCC = 1.8 V or above		-	-	30		
	VCC = 1.6 V or above		-	-	50		
EXTAL external clock input cycle time		t_{Xcyc}	50	-	-	ns	Figure 2.27
EXTAL external clock input high pulse width		t_{XH}	20	-	-	ns	
EXTAL external clock input low pulse width		t_{XL}	20	-	-	ns	
EXTAL external clock rising time		t_{Xr}	-	-	5	ns	
EXTAL external clock falling time		t_{Xf}	-	-	5	ns	
EXTAL external clock input wait time*1		t_{EXWT}	0.3	-	-	μs	-
EXTAL external clock input frequency		f_{EXTAL}	-	-	20	MHz	2.4 ≤ VCC ≤ 5.5
			-	-	8		1.8 ≤ VCC < 2.4
			-	-	1		1.6 ≤ VCC < 1.8
Main clock oscillator oscillation frequency		f_{MAIN}	1	-	20	MHz	2.4 ≤ VCC ≤ 5.5
			1	-	8		1.8 ≤ VCC < 2.4
			1	-	4		1.6 ≤ VCC < 1.8
LOCO clock oscillation frequency		f_{LOCO}	27.8528	32.768	37.6832	kHz	-
LOCO clock oscillation stabilization time		t_{LOCO}	-	-	100	μs	Figure 2.28
IWDT-dedicated clock oscillation frequency		f_{ILOCO}	12.75	15	17.25	kHz	-
MOCO clock oscillation frequency		f_{MOCO}	6.8	8	9.2	MHz	-
MOCO clock oscillation stabilization time		t_{MOCO}	-	-	1	μs	-

Table 2.22 Clock timing (2/2)

Item		Symbol	Min	Typ	Max	Unit	Test conditions
HOCO clock oscillation frequency		f_{HOCO24}	23.64	24	24.36	MHz	Ta = –40 to –20°C 1.8 ≤ VCC ≤ 5.5
			22.68	24	25.32		Ta = –40 to 85°C 1.6 ≤ VCC < 1.8
			23.76	24	24.24		Ta = –20 to 85°C 1.8 ≤ VCC ≤ 5.5
			23.52	24	24.48		Ta = 85 to 105°C 2.4 ≤ VCC ≤ 5.5
		f_{HOCO32}	31.52	32	32.48		Ta = –40 to -20°C 1.8 ≤ VCC ≤ 5.5
			30.24	32	33.76		Ta = –40 to 85°C 1.6 ≤ VCC < 1.8
			31.68	32	32.32		Ta = –20 to 85°C 1.8 ≤ VCC ≤ 5.5
			31.36	32	32.64		Ta = 85 to 105°C 2.4 ≤ VCC ≤ 5.5
		f_{HOCO48}*4	47.28	48	48.72		Ta = –40 to –20°C 1.8 ≤ VCC ≤ 5.5
			47.52	48	48.48		Ta = –20 to 85°C 1.8 ≤ VCC ≤ 5.5
			47.04	48	48.96		Ta = –40 to 105°C 2.4 ≤ VCC ≤ 5.5
		f_{HOCO64}*5	63.04	64	64.96		Ta = –40 to –20°C 2.4 ≤ VCC ≤ 5.5
			63.36	64	64.64		Ta = –20 to 85°C 2.4 ≤ VCC ≤ 5.5
			62.72	64	65.28		Ta = 85 to 105°C 2.4 ≤ VCC ≤ 5.5
HOCO clock oscillation stabilization time*6, *7	Except Low-Voltage mode	t_{HOCO24} t_{HOCO32}	-	-	37.1	μs	Figure 2.29
		t_{HOCO48}	-	-	43.3		
		t_{HOCO64}	-	-	80.6		
	Low-Voltage mode	t_{HOCO24} t_{HOCO32} t_{HOCO48} t_{HOCO64}	-	-	100.9		
PLL input frequency*2		f_{PLLIN}	4	-	12.5	MHz	-
PLL circuit oscillation frequency*2		f_{PLL}	24	-	64	MHz	-
PLL clock oscillation stabilization time*8		t_{PLL}	-	-	55.5	μs	Figure 2.30
PLL free-running oscillation frequency		f_{PLLFR}	-	8	-	MHz	-
Sub-clock oscillator oscillation frequency		f_{SUB}	-	32.768	-	kHz	-
Sub-clock oscillation stabilization time*3		t_{SUBOSC}	-	0.5	-	s	Figure 2.31

Note 1. Time until the clock can be used after the main clock oscillator stop bit (MOSCCR.MOSTP) is set to 0 (operating) when the external clock is stable.
Note 2. The VCC range that the PLL can be used is 2.4 to 5.5 V.
Note 3. After changing the setting of the SOSCCR.SOSTP bit so that the sub-clock oscillator operates, only start using the sub-clock after the sub-clock oscillation stabilization wait time that is equal to or greater than the oscillator manufacturer's recommended value has elapsed.
Note 4. The 48-MHz HOCO can be used within a VCC range of 1.8 V to 5.5 V.
Note 5. The 64-MHz HOCO can be used within a VCC range of 2.4 V to 5.5 V.
Note 6. This is a characteristic when HOCOCR.HCSTP bit is set to 0 (oscillation) in MOCO stop state.
When HOCOCR.HCSTP bit is set to 0 (oscillation) during MOCO oscillation, this specification is shortened by 1 μs.
Note 7. Whether stabilization time has elapsed can be confirmed by OSCSF.HOCOSF.
Note 8. This is a characteristic when PLLCR.PLLSTP bit is set to 0 (operation) in MOCO stop state.
When PLLCR.PLLSTP bit is set to 0 (operation) during MOCO oscillation, this specification is shortened by 1 μs.

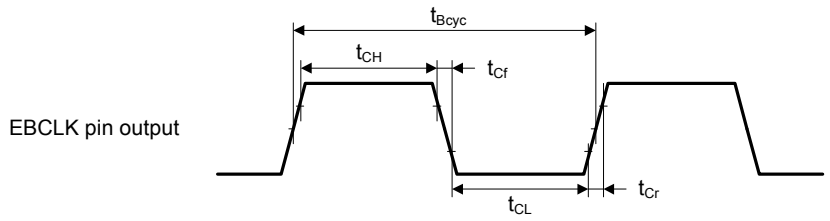

Test conditions: V_{OH} = VCC × 0.7, V_{OL} = VCC × 0.3, I_{OH} = -1.0 mA, I_{OL} = 1.0 mA, C = 30 pF

Figure 2.26 EBCLK pin output timing

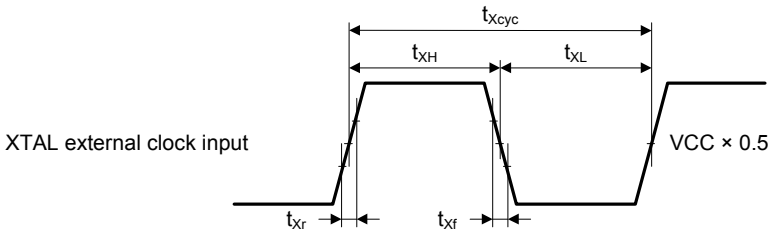

Figure 2.27 XTAL external clock input timing

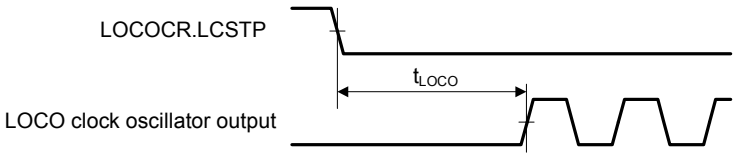

Figure 2.28 LOCO clock oscillation start timing

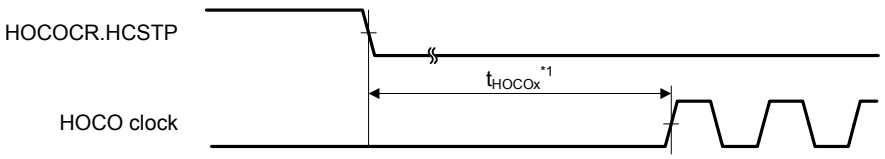

Note 1. x = 24, 32, 48, 64

Figure 2.29 HOCO clock oscillation start timing (started by setting HOCOCR.HCSTP bit)

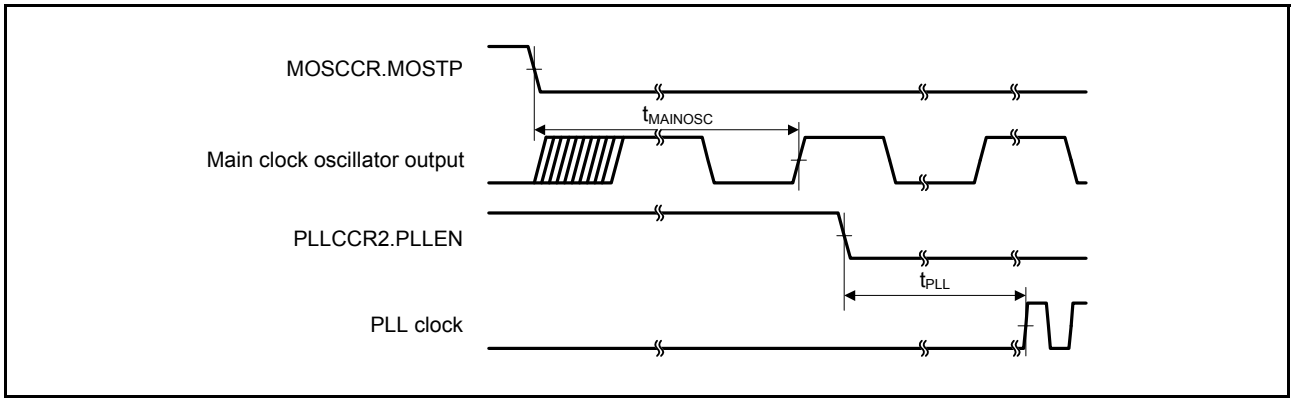

Figure 2.30 PLL clock oscillation start timing (PLL is operated after main clock oscillation has settled)

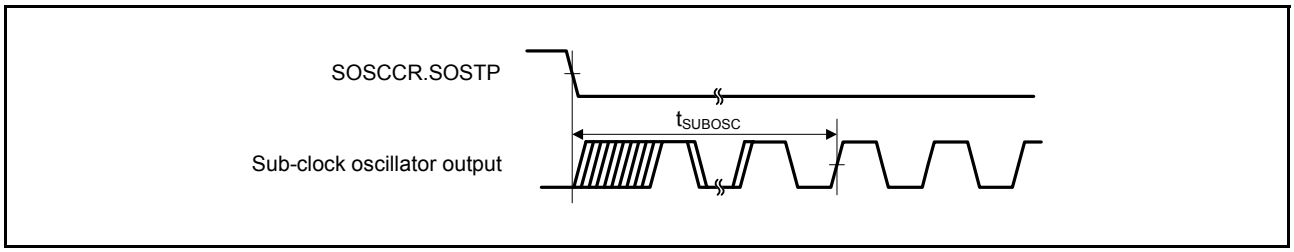

Figure 2.31 Sub-clock oscillation start timing

2.3.3 Reset Timing

Table 2.23 Reset timing

Item		Symbol	Min	Typ	Max	Unit	Test conditions
RES pulse width	At power-on	t_{RESWP}	3	-	-	ms	Figure 2.32
	Other than above	t_{RESW}	30	-	-	μs	Figure 2.33
Wait time after RES cancellation (at power-on)	LVD0: enable*1	t_{RESWT}	-	0.7	-	ms	Figure 2.32
	LVD0: disable*2		-	0.3	-		
Wait time after RES cancellation (during powered-on state)	LVD0: enable*1	t_{RESWT2}	-	0.5	-	μs	Figure 2.33
	LVD0: disable*2		-	0.05	-		
Reset period	IWDT*3	t_{RESWIW}	-	1	-	IWDT clock cycle	Figure 2.34
	Internal reset (except IWDT)	t_{RESWIR}	-	1	-	ICLK cycle	
Wait time after Internal reset cancellation	LVD0: enable*1	t_{RESWT3}	-	0.5	-	μs	
	LVD0: disable*2		-	0.05	-		

Note 1. When OFS1.LVDAS = 0.
Note 2. When OFS1.LVDAS = 1.
Note 3. When IWDTCR.CKS[3:0] = 0000b.

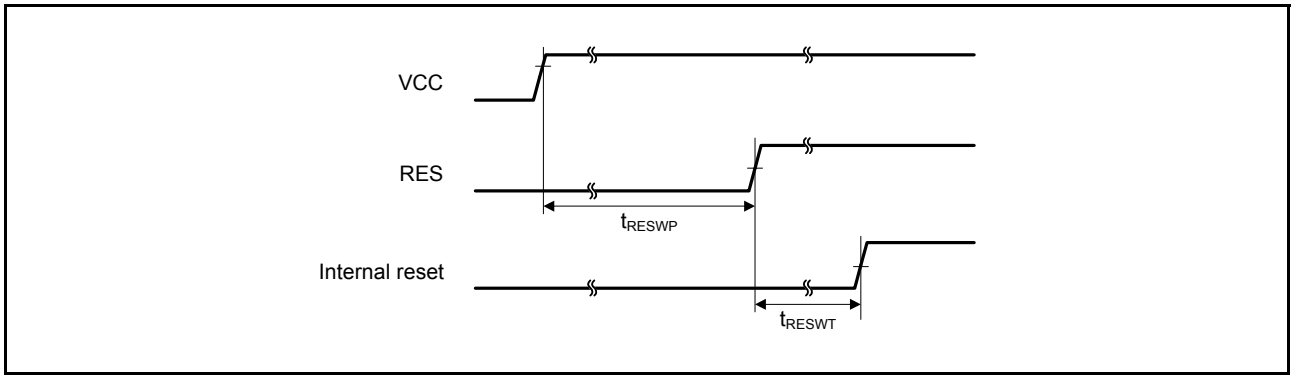

Figure 2.32 Reset input timing at power-on

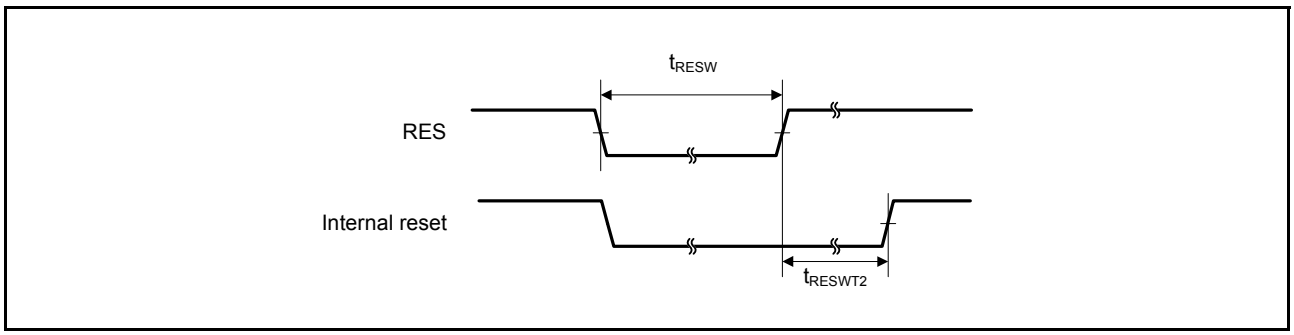

Figure 2.33 Reset input timing (1)

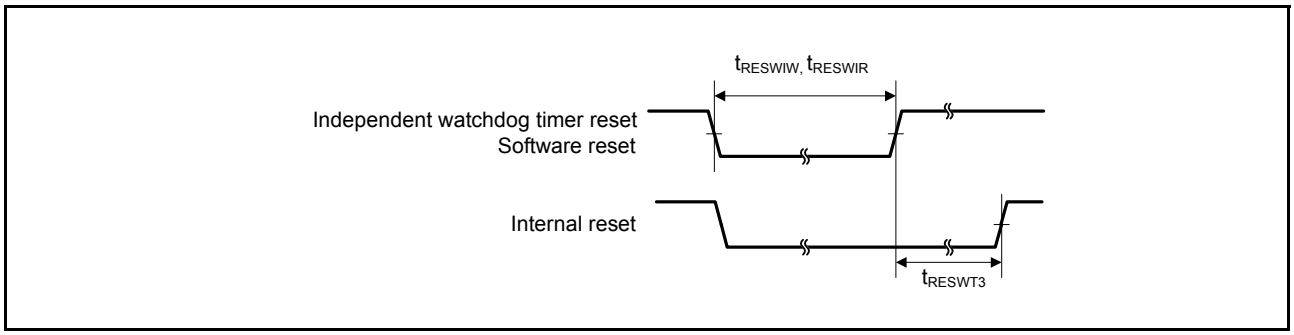

Figure 2.34 Reset input timing (2)

2.3.4 Wakeup Time

Table 2.24 Timing of recovery from low power modes (1)

Item				Symbol	Min	Typ	Max	Unit	Test conditions
Recovery time from Software Standby mode*1	High-speed mode	Crystal resonator connected to main clock oscillator	System clock source is main clock oscillator (20 MHz)*2	t_{SBYMC}	-	2	3	ms	Figure 2.35
			System clock source is PLL (48 MHz) with Main clock oscillator*2	t_{SBYPC}	-	2	3	ms	
		External clock input to main clock oscillator	System clock source is main clock oscillator (20 MHz)*3	t_{SBYEX}	-	14	25	μs	
			System clock source is PLL (48 MHz) with Main clock oscillator*3	t_{SBYPE}	-	53	76	μs	
		System clock source is HOCO*4 (HOCO clock is 32 MHz)		t_{SBYHO}	-	43	52	μs	
		System clock source is HOCO*4 (HOCO clock is 48 MHz)		t_{SBYHO}	-	44	52	μs	
		System clock source is HOCO*5 (HOCO clock is 64 MHz)		t_{SBYHO}	-	82	110	μs	
		System clock source is MOCO		t_{SBYMO}	-	16	25	μs	

Note 1. The division ratio of ICK, BCK, FCK, and PCKx is 1. The recovery time is determined by the system clock source.
Note 2. The Main Clock Oscillator Wait Control Register (MOSCWTCR) is set to 05h.
Note 3. The Main Clock Oscillator Wait Control Register (MOSCWTCR) is set to 00h.
Note 4. The HOCO Clock Wait Control Register (HOCOWTCR) is set to 05h.
Note 5. The HOCO Clock Wait Control Register (HOCOWTCR) is set to 06h.

Table 2.25 Timing of Recovery from low power modes (2)

Item				Symbol	Min	Typ	Max	Unit	Test conditions
Recovery time from Software Standby mode*1	Middle-speed mode	Crystal resonator connected to main clock oscillator	System clock source is main clock oscillator (12 MHz)*2	t_{SBYMC}	-	2	3	ms	Figure 2.35
			System clock source is PLL (12 MHz) with Main clock oscillator*2	t_{SBYPC}	-	2	3	ms	
		External clock input to main clock oscillator	System clock source is main clock oscillator (12 MHz)*3	t_{SBYEX}	-	2.9	10	μs	
			System clock source is PLL (12 MHz) with Main clock oscillator*3	t_{SBYPE}	-	49	76	μs	
		System clock source is HOCO*4		t_{SBYHO}	-	38	50	μs	
		System clock source is MOCO (8 MHz)		t_{SBYMO}	-	3.5	5.5	μs	

Note 1. The division ratio of ICK, BCK, FCK, PCLKA, PCLKB, PCLKC, and PCLKD are 1. The recovery time is determined by the system clock source.
Note 2. The Main Clock Oscillator Wait Control Register (MOSCWTCR) is set to 05h.
Note 3. The Main Clock Oscillator Wait Control Register (MOSCWTCR) is set to 00h.
Note 4. The system clock is 12 MHz.

Table 2.26 Timing of recovery from low power modes (3)

Item				Symbol	Min	Typ	Max	Unit	Test conditions
Recovery time from Software Standby mode*1	Low-speed mode	Crystal resonator connected to main clock oscillator	System clock source is main clock oscillator (1 MHz)*2	t_{SBYMC}	-	2	3	ms	Figure 2.35
		External clock input to main clock oscillator	System clock source is main clock oscillator (1 MHz)*3	t_{SBYEX}	-	28	50	μs	
		System clock source is MOCO (1 MHz)		t_{SBYMO}	-	25	35	μs	

Note 1. The division ratio of ICK, BCK, FCK, and PCKx is 1. The recovery time is determined by the system clock source.
Note 2. The Main Clock Oscillator Wait Control Register (MOSCWTCR) is set to 05h.
Note 3. The Main Clock Oscillator Wait Control Register (MOSCWTCR) is set to 00h.

Table 2.27 Timing of recovery from low power modes (4)

Item				Symbol	Min	Typ	Max	Unit	Test conditions
Recovery time from Software Standby mode*1	Low-voltage mode	Crystal resonator connected to main clock oscillator	System clock source is main clock oscillator (4 MHz)*2	t_{SBYMC}	-	2	3	ms	Figure 2.35
		External clock input to main clock oscillator	System clock source is main clock oscillator (4 MHz)*3	t_{SBYEX}	-	108	130	μs	
		System clock source is HOCO (4 MHz)		t_{SBYHO}	-	108	130	μs	

Note 1. The division ratio of ICK, BCK, FCK, and PCKx is and 1. The recovery time is determined by the system clock source. When multiple oscillators are active, the recovery time can be determined by the following expression.
Note 2. The Main Clock Oscillator Wait Control Register (MOSCWTCR) is set to 05h.
Note 3. The Main Clock Oscillator Wait Control Register (MOSCWTCR) is set to 00h.

Table 2.28 Timing of recovery from low power modes (5)

Item			Symbol	Min	Typ	Max	Unit	Test conditions
Recovery time from Software Standby mode*1	Subosc-speed mode	System clock source is sub-clock oscillator (32.768 kHz)	t_{SBYSC}	-	0.85	1	ms	Figure 2.35
		System clock source is LOCO (32.768 kHz)	t_{SBYLO}	-	0.85	1.2	ms	

Note 1. The sub-clock oscillator or LOCO itself continues to oscillate in Software Standby mode during Subosc-speed mode.

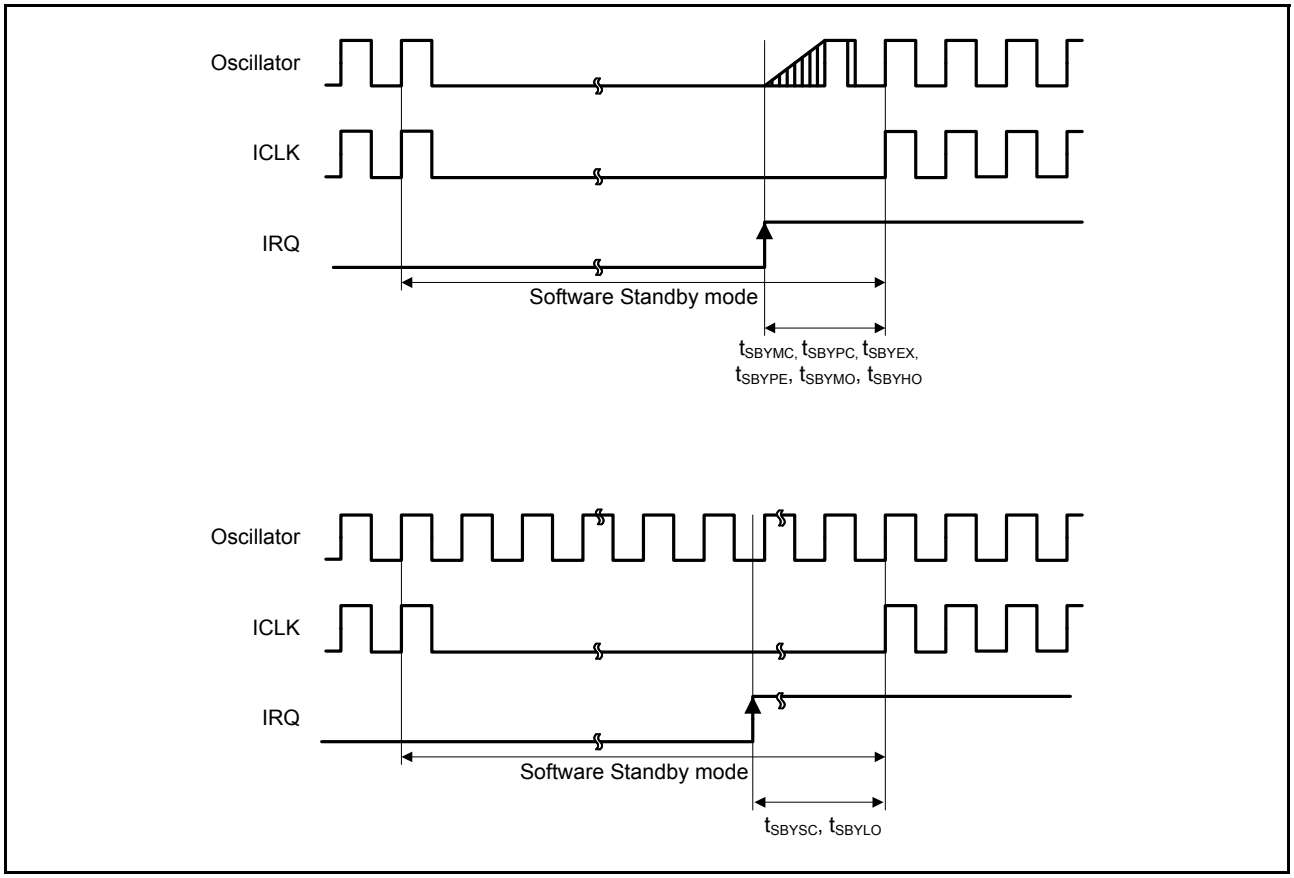

Figure 2.35 Software Standby mode cancellation timing

Table 2.29 Timing of recovery from low power modes (6)

Item		Symbol	Min	Typ	Max	Unit	Test conditions
Recovery time from Software Standby mode to Snooze	High-speed mode System clock source is HOCO	t_{SNZ}	-	36	45	μs	-
	Middle-speed mode System clock source is MOCO (8 MHz)	t_{SNZ}	-	1.3	3.6	μs	
	Low-speed mode System clock source is MOCO (1 MHz)	t_{SNZ}	-	10	13	μs	
	Low-voltage mode System clock source is HOCO (4 MHz)	t_{SNZ}	-	87	110	μs	

2.3.5 NMI and IRQ Noise Filter

Table 2.30 NMI and IRQ noise filter

Item	Symbol	Min	Typ	Max	Unit	Test conditions	
NMI pulse width	t_{NMIW}	200	-	-	ns	NMI digital filter disabled	$t_{Pcyc} \times 2 \leq 200$ ns
		$t_{Pcyc} \times 2$*1	-	-			$t_{Pcyc} \times 2 > 200$ ns
		200	-	-		NMI digital filter enabled	$t_{NMICK} \times 3 \leq 200$ ns
		$t_{NMICK} \times 3.5$*2	-	-			$t_{NMICK} \times 3 > 200$ ns
IRQ pulse width	t_{IRQW}	200	-	-	ns	IRQ digital filter disabled	$t_{Pcyc} \times 2 \leq 200$ ns
		$t_{Pcyc} \times 2$*1	-	-			$t_{Pcyc} \times 2 > 200$ ns
		200	-	-		IRQ digital filter enabled	$t_{IRQCK} \times 3 \leq 200$ ns
		$t_{IRQCK} \times 3.5$*3	-	-			$t_{IRQCK} \times 3 > 200$ ns

Note: 200 ns minimum in Software Standby mode.
Note 1. t_{Pcyc} indicates the cycle of PCLKB.
Note 2. t_{NMICK} indicates the cycle of the NMI digital filter sampling clock.
Note 3. t_{IRQCK} indicates the cycle of the IRQi digital filter sampling clock (i = 0 to 15).

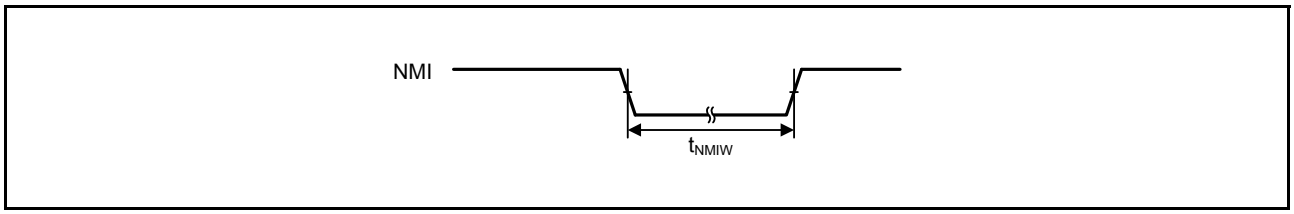

Figure 2.36 NMI interrupt input timing

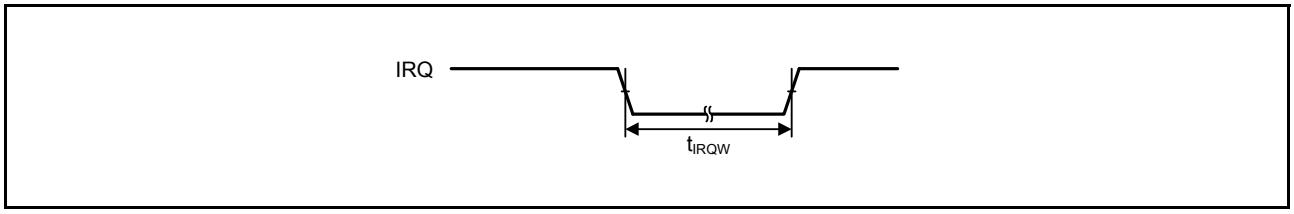

Figure 2.37 IRQ interrupt input timing

2.3.6 Bus Timing

Table 2.31 Bus timing (1)
Conditions: EBCLK pin ≤ 12 MHz (package with 145 to 100 pins) (BCLK: up to 24 MHz)
VCC = AVCC0 = 2.7 to 5.5 V
Output load conditions: V_{OH} = VCC × 0.5, V_{OL} = VCC × 0.5, C = 30 pF

Item	Symbol	Min	Max	Unit	Test conditions
Address delay	t_{AD}	-	55	ns	Figure 2.38 to Figure 2.41
Byte control delay	t_{BCD}	-	55	ns	
CS delay	t_{CSD}	-	55	ns	
RD delay	t_{RSD}	-	55	ns	
Read data setup time	t_{RDS}	37	-	ns	
Read data hold time	t_{RDH}	0	-	ns	
WR delay	t_{WRD}	-	55	ns	
Write data delay	t_{WDD}	-	55	ns	
Write data hold time	t_{WDH}	0	-	ns	
WAIT setup time	t_{WTS}	37	-	ns	Figure 2.42
WAIT hold time	t_{WTH}	0	-	ns	

Table 2.32 Bus timing (2)
Conditions: EBCLK pin ≤ 8 MHz (package with 145 to 100 pins) (BCLK: up to 8 MHz)
VCC = AVCC0 = 2.4 to 2.7 V
Output load conditions: V_{OH} = VCC × 0.5, V_{OL} = VCC × 0.5, C = 30 pF

Item	Symbol	Min	Max	Unit	Test conditions
Address delay	t_{AD}	-	55	ns	Figure 2.38 to Figure 2.41
Byte control delay	t_{BCD}	-	55	ns	
CS delay	t_{CSD}	-	55	ns	
RD delay	t_{RSD}	-	55	ns	
Read data setup time	t_{RDS}	45	-	ns	
Read data hold time	t_{RDH}	0	-	ns	
WR delay	t_{WRD}	-	55	ns	
Write data delay	t_{WDD}	-	55	ns	
Write data hold time	t_{WDH}	0	-	ns	
WAIT setup time	t_{WTS}	45	-	ns	Figure 2.42
WAIT hold time	t_{WTH}	0	-	ns	

Table 2.33 Bus timing (3)
Conditions: EBCLK pin ≤ 4 MHz (package with 145 to 100 pins) (BCLK: up to 4 MHz)
VCC = AVCC0 = 1.8 to 2.4 V
Output load conditions: V_{OH} = VCC × 0.5, V_{OL} = VCC × 0.5, C = 30 pF

Item	Symbol	Min	Max	Unit	Test conditions
Address delay	t_{AD}	-	90	ns	Figure 2.38 to Figure 2.41
Byte control delay	t_{BCD}	-	90	ns	
CS delay	t_{CSD}	-	90	ns	
RD delay	t_{RSD}	-	90	ns	
Read data setup time	t_{RDS}	70	-	ns	
Read data hold time	t_{RDH}	0	-	ns	
WR delay	t_{WRD}	-	90	ns	
Write data delay	t_{WDD}	-	90	ns	
Write data hold time	t_{WDH}	0	-	ns	

Table 2.33 Bus timing (3)
Conditions: EBCLK pin ≤ 4 MHz (package with 145 to 100 pins) (BCLK: up to 4 MHz)
VCC = AVCC0 = 1.8 to 2.4 V
Output load conditions: V_{OH} = VCC × 0.5, V_{OL} = VCC × 0.5, C = 30 pF

Item	Symbol	Min	Max	Unit	Test conditions
WAIT setup time	t_{WTS}	70	-	ns	Figure 2.42
WAIT hold time	t_{WTH}	0	-	ns	

Table 2.34 Bus timing (4)
Conditions: EBCLK pin ≤ 2 MHz (package with 145 to 100 pins) (BCLK: up to 2 MHz)
VCC = AVCC0 = 1.6 to 1.8 V
Output load conditions: V_{OH} = VCC × 0.5, V_{OL} = VCC × 0.5, C = 30 pF

Item	Symbol	Min	Max	Unit	Test conditions
Address delay	t_{AD}	-	120	ns	Figure 2.38 to Figure 2.41
Byte control delay	t_{BCD}	-	120	ns	
CS delay	t_{CSD}	-	120	ns	
RD delay	t_{RSD}	-	120	ns	
Read data setup time	t_{RDS}	90	-	ns	
Read data hold time	t_{RDH}	0	-	ns	
WR delay	t_{WRD}	-	120	ns	
Write data delay	t_{WDD}	-	120	ns	
Write data hold time	t_{WDH}	0	-	ns	
WAIT setup time	t_{WTS}	90	-	ns	Figure 2.42
WAIT hold time	t_{WTH}	0	-	ns	

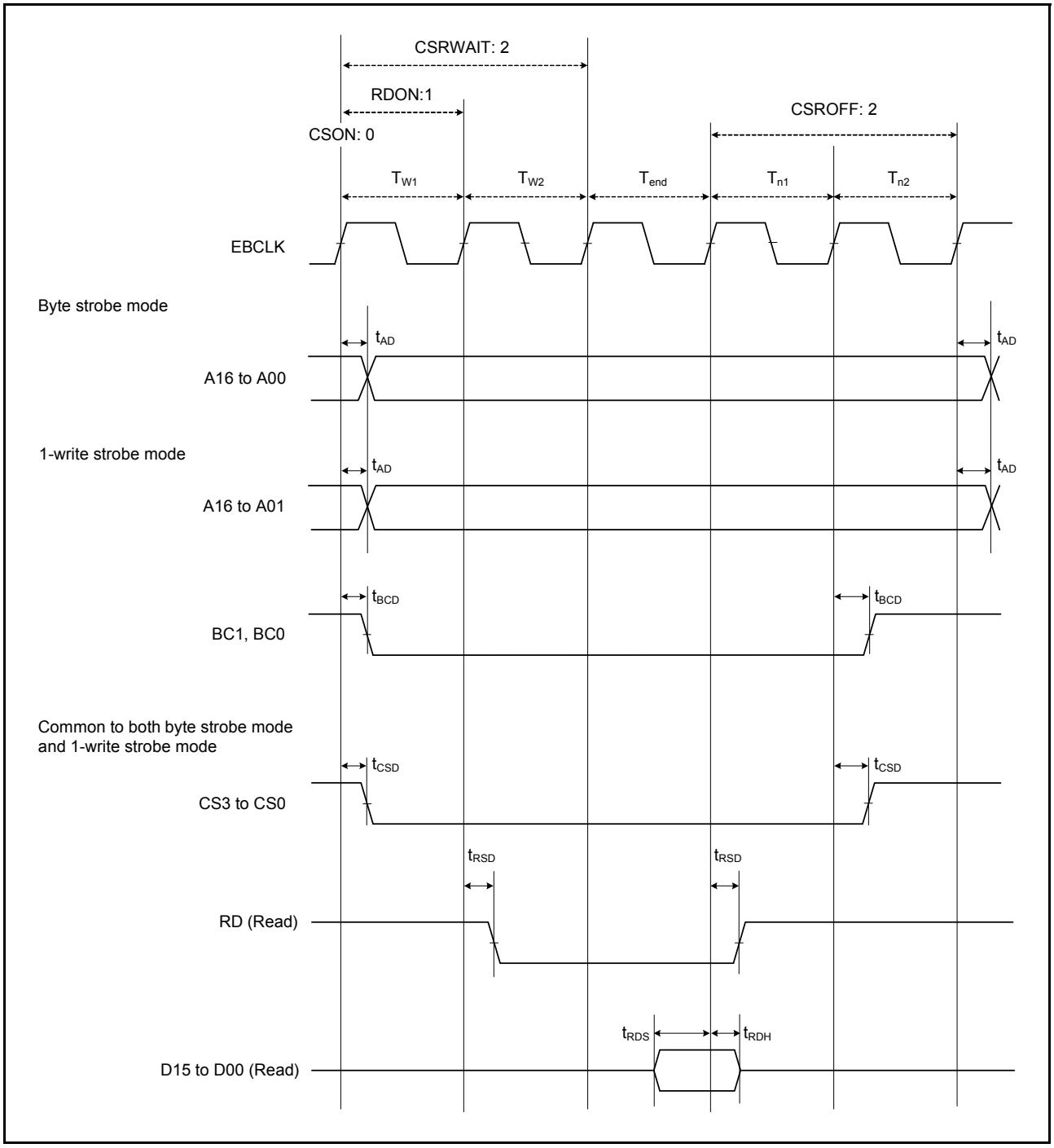

Figure 2.38 External bus timing/normal read cycle (bus clock synchronized)

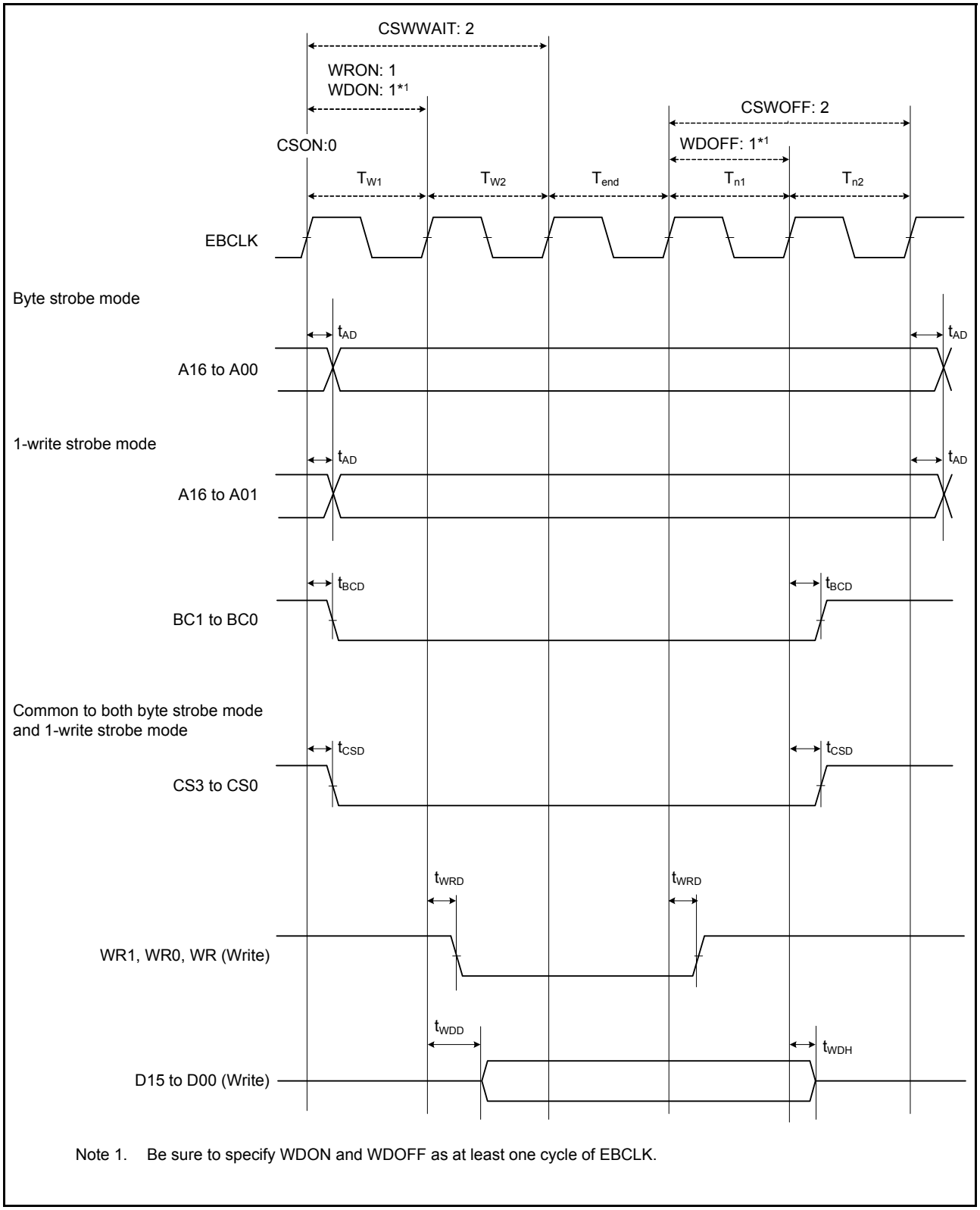

Note 1. Be sure to specify WDON and WDOFF as at least one cycle of EBCLK.

Figure 2.39 External bus timing/normal write cycle (bus clock synchronized)

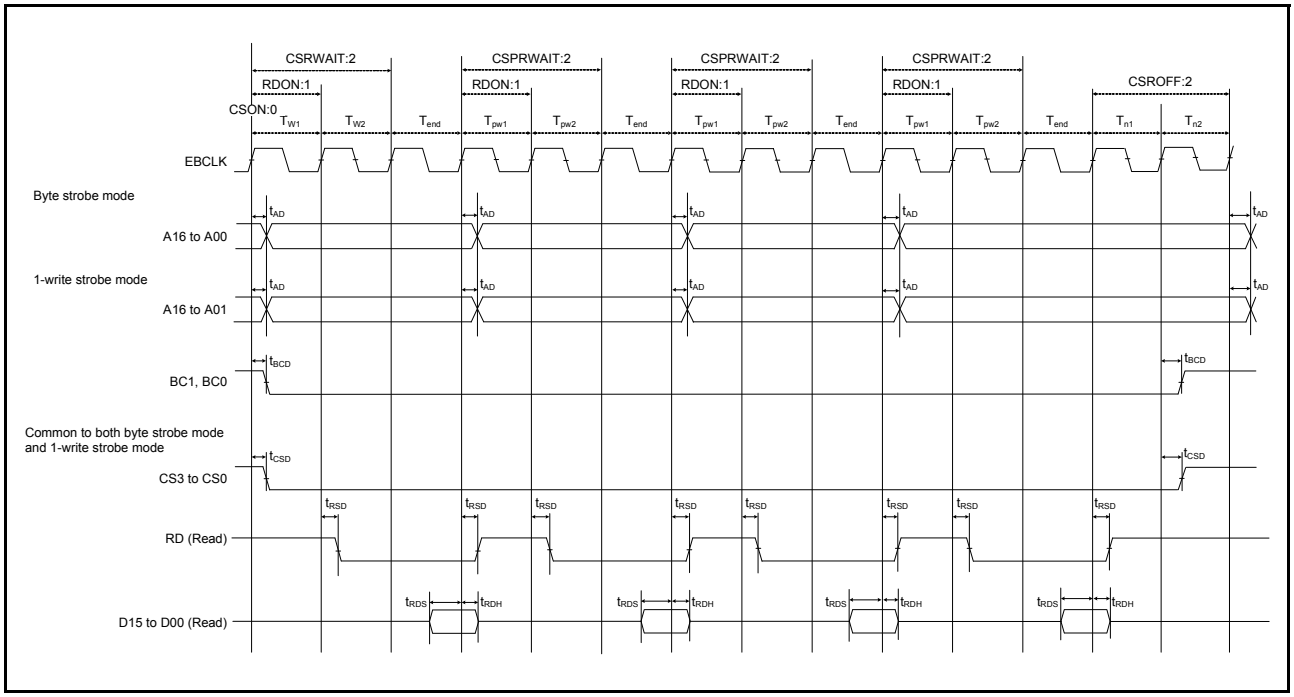

Figure 2.40 External bus timing/page read cycle (bus clock synchronized)

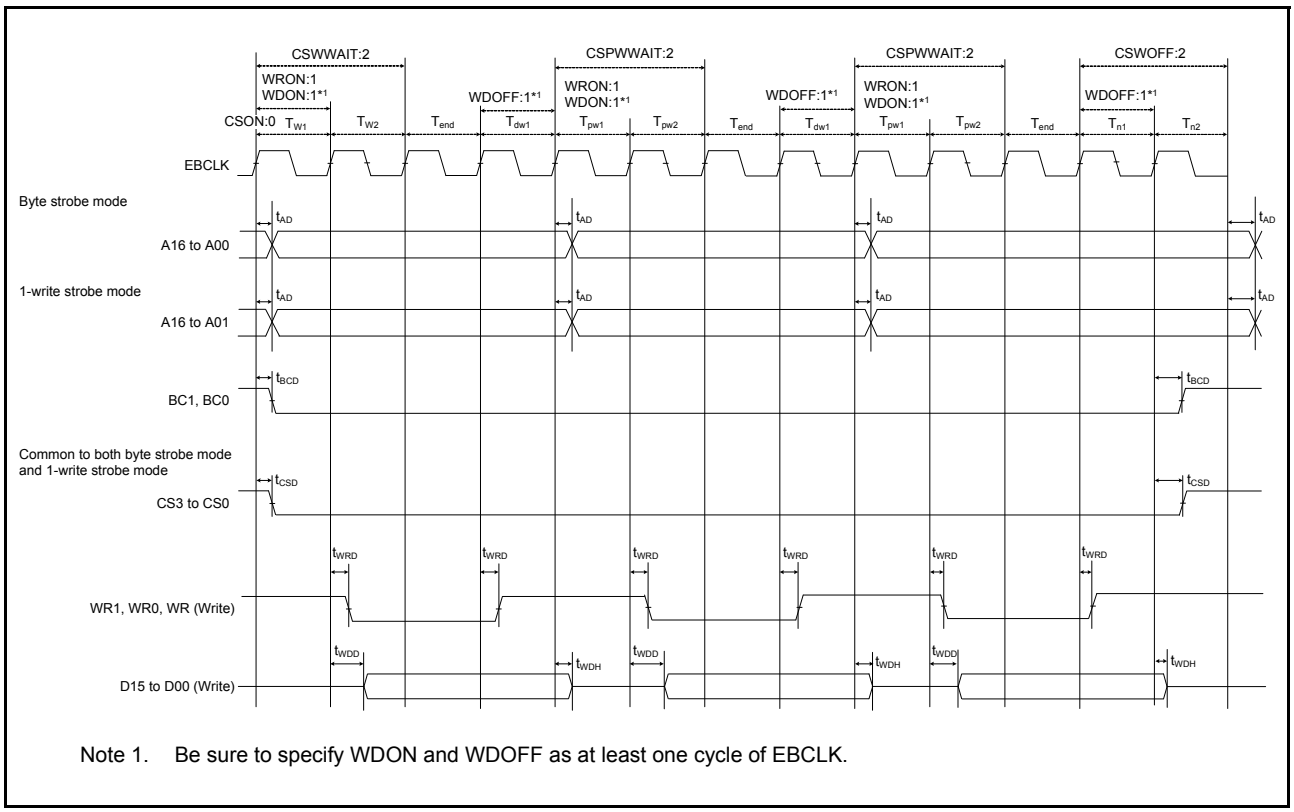

Note 1. Be sure to specify WDON and WDOFF as at least one cycle of EBCLK.

Figure 2.41 External bus timing/page write cycle (bus clock synchronized)

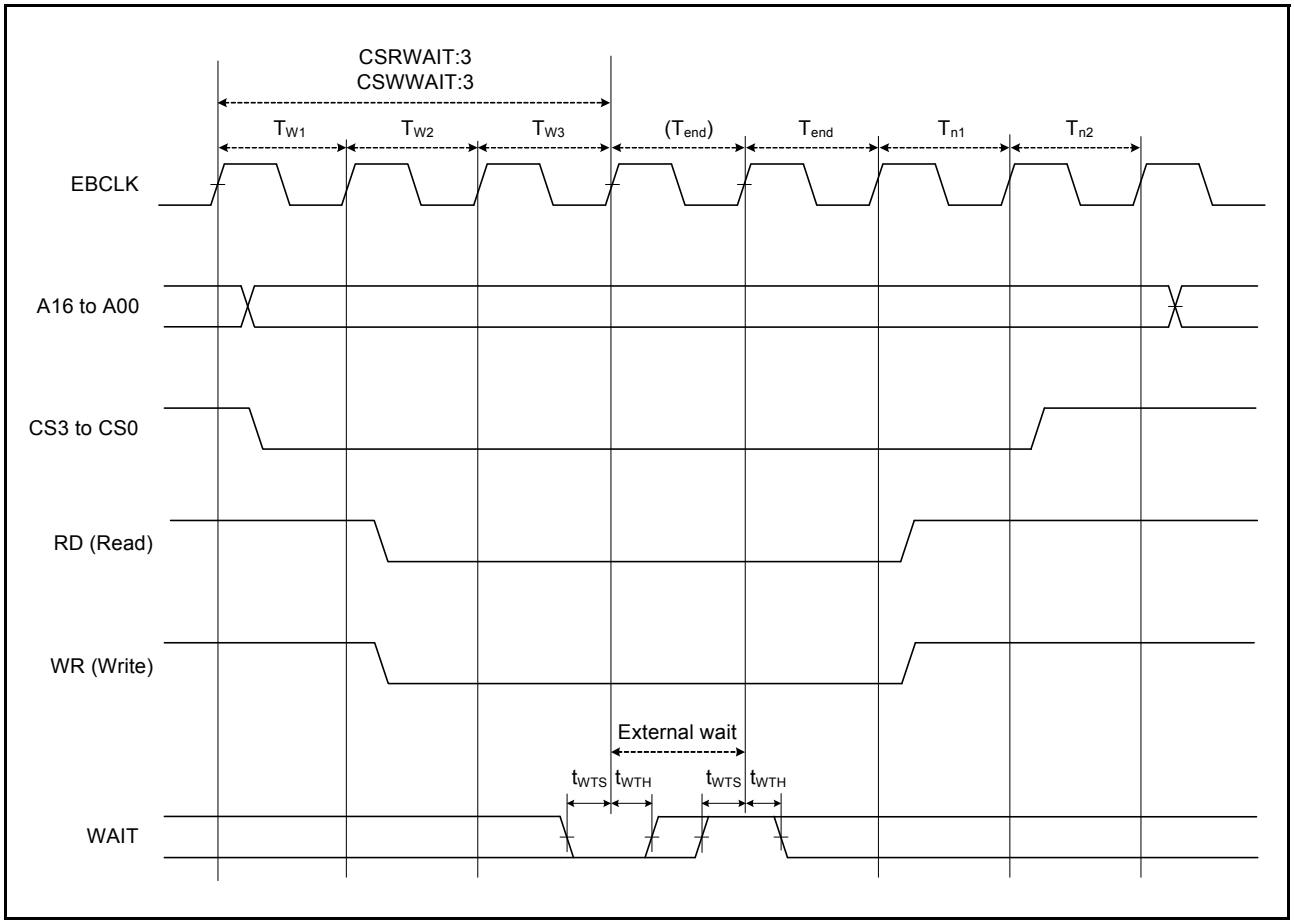

Figure 2.42 External bus timing/external wait control

2.3.7 I/O Ports, POEG, GPT, AGT, KINT, and ADC14 Trigger Timing

Table 2.35 I/O Ports, POEG, GPT, AGT, KINT, and ADC14 trigger timing

Item			Symbol	Min	Max	Unit	Test conditions
I/O Ports	Input data pulse width		t_{PRW}	1.5	-	t_{Pcyc}	Figure 2.43
	Input/Output data cycle (P002, P003, P004, P007)		t_{POcyc}	10	-	μs	
POEG	POEG input trigger pulse width		t_{POEW}	3	-	t_{Pcyc}	Figure 2.44
GPT	Input capture pulse width	Single edge	t_{GTICW}	1.5	-	t_{PDcyc}	Figure 2.45
		Dual edge		2.5	-		
AGT	AGTIO, AGTEE input cycle	2.7 V ≤ VCC ≤ 5.5 V	t_{ACYC}*1	250	-	ns	Figure 2.46
		2.4 V ≤ VCC < 2.7 V		500	-	ns	
		1.8 V ≤ VCC < 2.4 V		1000	-	ns	
		1.6 V ≤ VCC < 1.8 V		2000	-	ns	
	AGTIO, AGTEE input high level width, low-level width	2.7 V ≤ VCC ≤ 5.5 V	t_{ACKWH}, t_{ACKWL}	100	-	ns	
		2.4 V ≤ VCC < 2.7 V		200	-	ns	
		1.8 V ≤ VCC < 2.4 V		400	-	ns	
		1.6 V ≤ VCC < 1.8 V		800	-	ns	
	AGTIO, AGTO, AGTOA, AGTOB output frequency	2.7 V ≤ VCC ≤ 5.5 V	t_{ACYC2}	62.5	-	ns	Figure 2.46
		2.4 V ≤ VCC < 2.7 V		125	-	ns	
		1.8 V ≤ VCC < 2.4 V		250	-	ns	
		1.6 V ≤ VCC < 1.8 V		500	-	ns	
ADC14	14-bit A/D converter trigger input pulse width		t_{TRGW}	1.5	-	t_{Pcyc}	Figure 2.47
KINT	Key interrupt input low-level width		t_{KR}	250	-	ns	Figure 2.48

Note 1. Constraints on AGTIO input: t_{Pcyc} × 2 (t_{Pcyc}: PCLKB cycle) < t_{ACYC}

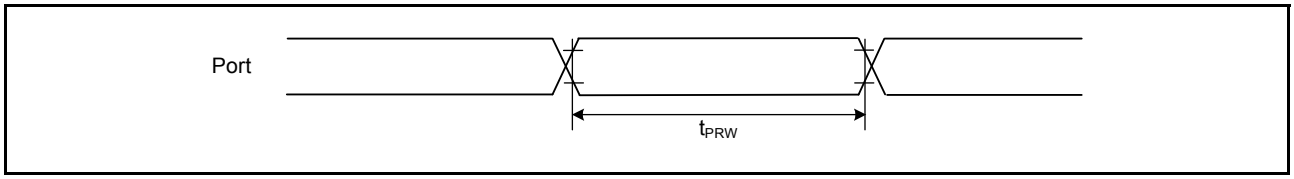

Figure 2.43 I/O ports input timing

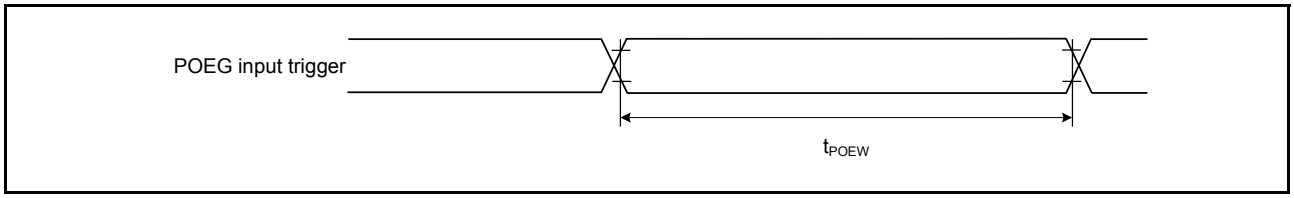

Figure 2.44 POEG input trigger timing

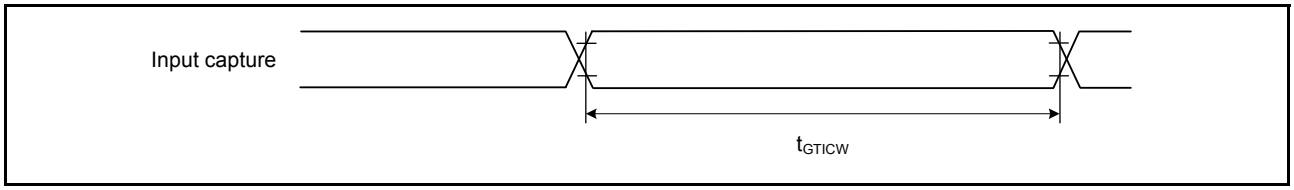

Figure 2.45 GPT input capture timing

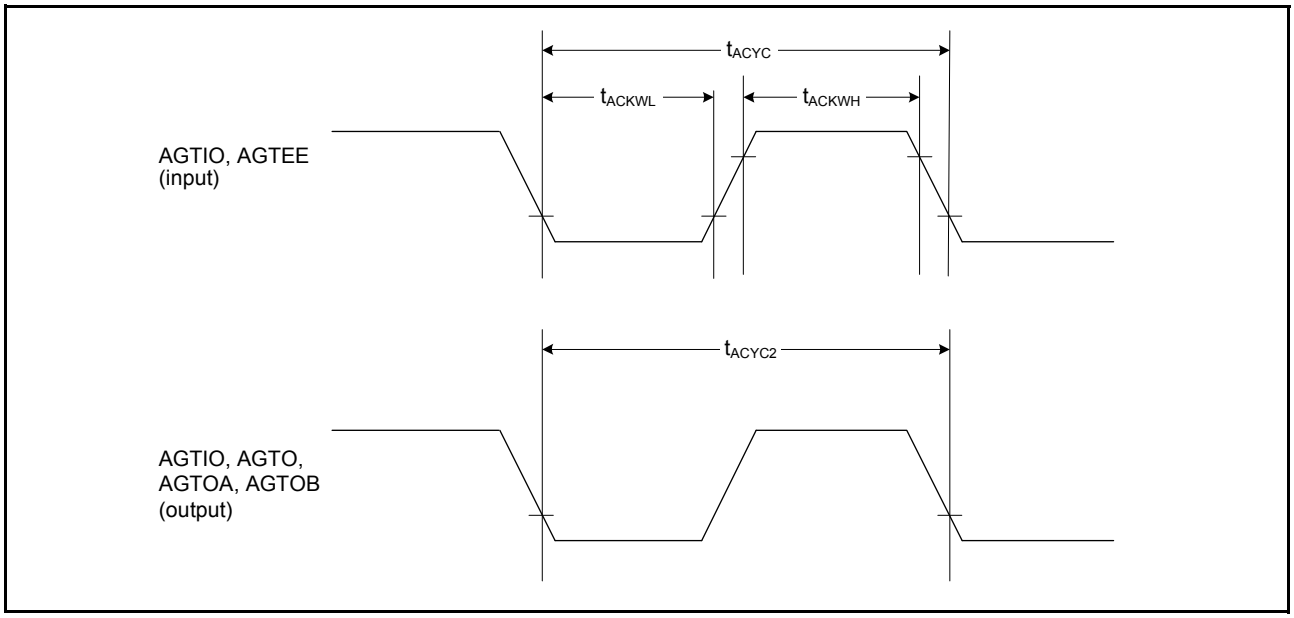

Figure 2.46 AGT I/O timing

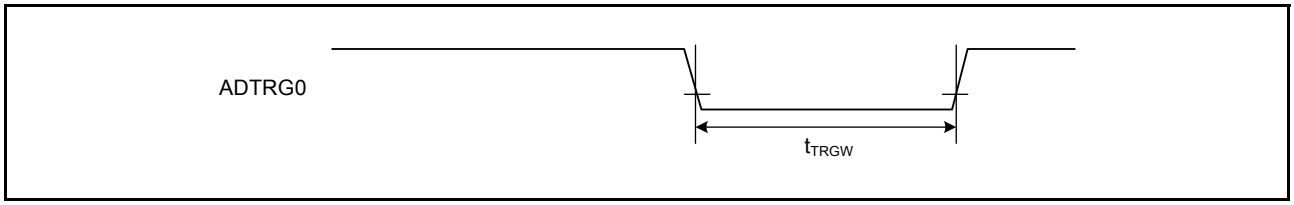

Figure 2.47 ADC14 trigger input timing

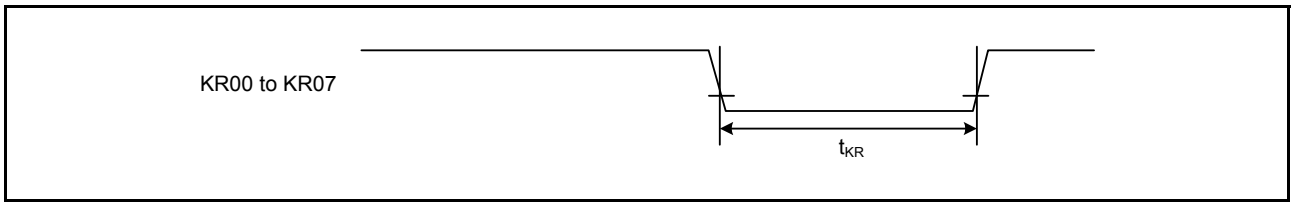

Figure 2.48 Key interrupt input timing

2.3.8 CAC Timing

Table 2.36 CAC timing

Item			Symbol	Min	Typ	Max	Unit	Test conditions
CAC	CACREF input pulse width	$t_{PBcyc} \leq t_{cac}$ *2	t_{CACREF}	$4.5 \times t_{cac} + 3 \times t_{PBcyc}$	-	-	ns	-
		$t_{PBcyc} > t_{cac}$ *2		$5 \times t_{cac} + 6.5 \times t_{PBcyc}$	-	-	ns	

Note 1. t_{PBcyc}: PCLKB cycle.
Note 2. t_{cac}: CAC count clock source cycle.

2.3.9 SCI Timing

Table 2.37 SCI timing (1)
Conditions: VCC = AVCC0 = VREFH = VCC_USB = 1.6 to 5.5 V

Item				Symbol	Min	Max	Unit*1	Test conditions
SCI	Input clock cycle	Asynchronous		t_{Scyc}	4	-	t_{Pcyc}	Figure 2.49
		Clock synchronous			6	-		
	Input clock pulse width			t_{SCKW}	0.4	0.6	t_{Scyc}	
	Input clock rise time			t_{SCKr}	-	20	ns	
	Input clock fall time			t_{SCKf}	-	20	ns	
	Output clock cycle	Asynchronous		t_{Scyc}	6	-	t_{Pcyc}	
		Clock synchronous			4	-		
	Output clock pulse width			t_{SCKW}	0.4	0.6	t_{Scyc}	
	Output clock rise time		1.8 V or above	t_{SCKr}	-	20	ns	
			1.6 V or above		-	30		
	Output clock fall time		1.8 V or above	t_{SCKf}	-	20	ns	
			1.6 V or above		-	30		
	Transmit data delay (master)	Clock synchronous	1.8 V or above	t_{TXD}	-	40	ns	Figure 2.50
			1.6 V or above		-	45		
	Transmit data delay (slave)	Clock synchronous	2.7 V or above		-	55	ns	
			2.4 V or above		-	60		
			1.8 V or above		-	100		
			1.6 V or above		-	125		
	Receive data setup time (master)	Clock synchronous	2.7 V or above	t_{RXS}	45	-	ns	
			2.4 V or above		55	-		
			1.8 V or above		90	-		
			1.6 V or above		105	-		
	Receive data setup time (slave)	Clock synchronous	2.7 V or above		40	-	ns	
			1.6 V or above		45	-		
	Receive data hold time (master)	Clock synchronous		t_{RXH}	5	-	ns	
	Receive data hold time (slave)	Clock synchronous		t_{RXH}	40	-	ns	

Note 1. t_{Pcyc}: PCLKA cycle.

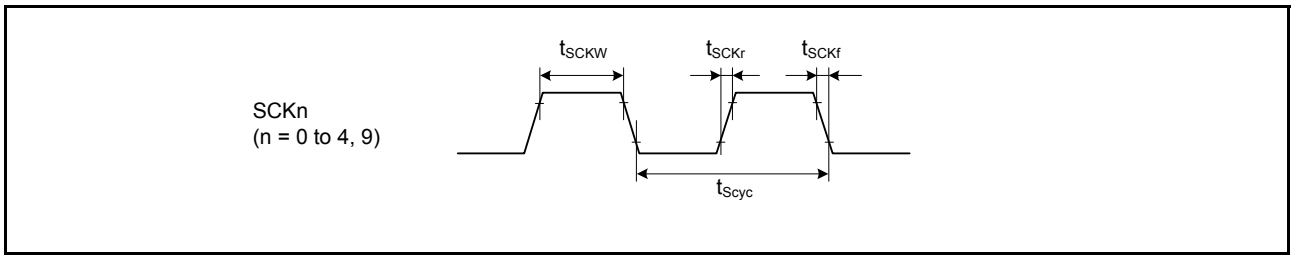

Figure 2.49 SCK clock input timing

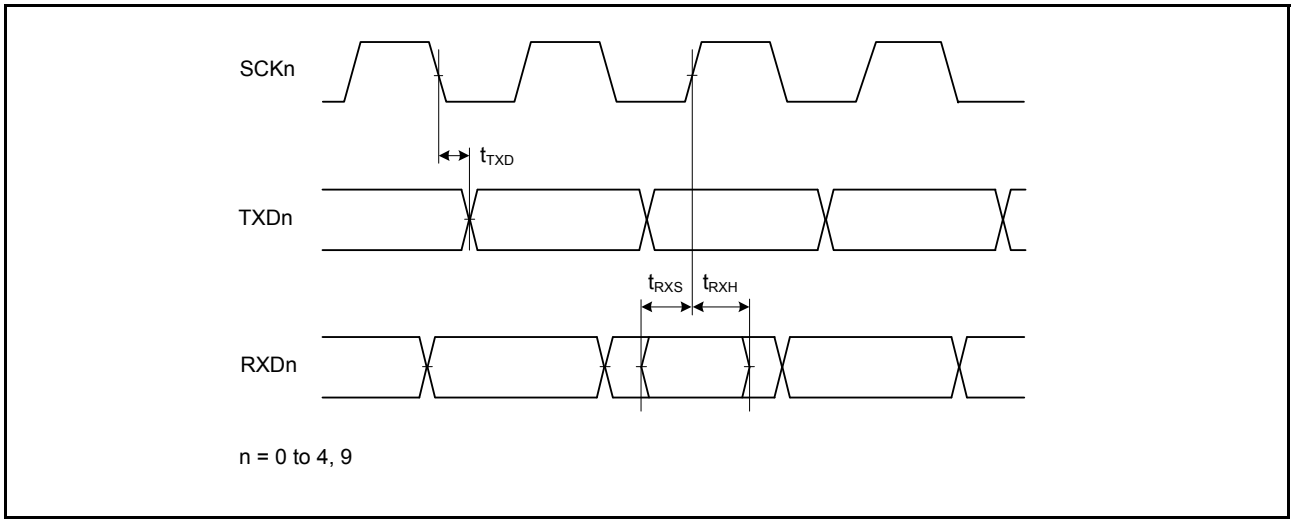

Figure 2.50 SCI input/output timing in clock synchronous mode

Table 2.38 SCI timing (2) (1/2)

Conditions: VCC = AVCC0 = VREFH = VCC_USB = 1.6 to 5.5 V, VREFH0 = 2.7 V to AVCC0

Item				Symbol	Min	Max	Unit	Test conditions
Simple SPI	SCK clock cycle output (master)			t_{SPcyc}	4	65536	t_{Pcyc}	Figure 2.51
	SCK clock cycle input (slave)				6	65536		
	SCK clock high pulse width			t_{SPCKWH}	0.4	0.6	t_{SPcyc}	
	SCK clock low pulse width			t_{SPCKWL}	0.4	0.6	t_{SPcyc}	
	SCK clock rise and fall time		1.8 V or above	t_{SPCKr}, t_{SPCKf}	-	20	ns	
			1.6 V or above		-	30		
	Data input setup time	Master	2.7 V or above	t_{SU}	45	-	ns	Figure 2.52 to Figure 2.55
			2.4 V or above		55	-		
			1.8 V or above		80	-		
			1.6 V or above		105	-		
		Slave	2.7 V or above		40	-		
			1.6 V or above		45	-		
	Data input hold time	Master		t_H	33.3	-	ns	
		Slave			40	-		
	SS input setup time			t_{LEAD}	1	-	t_{SPcyc}	
	SS input hold time			t_{LAG}	1	-	t_{SPcyc}	
	Data output delay	Master	1.8 V or above	t_{OD}	-	40	ns	
			1.6 V or above		-	50		
		Slave	2.4 V or above		-	65		
			1.8 V or above		-	100		
			1.6 V or above		-	125		
	Data output hold time	Master	2.7 V or above	t_{OH}	–10	-	ns	
			2.4 V or above		–20	-		
			1.8 V or above		–30	-		
			1.6 V or above		–40	-		
		Slave			–10	-		
	Data rise and fall time	Master		t_{Dr}, t_{Df}	-	20	ns	
		Slave	1.8 V or above		-	20		
			1.6 V or above		-	30		

Table 2.38 SCI timing (2) (2/2)

Conditions: VCC = AVCC0 = VREFH = VCC_USB = 1.6 to 5.5 V, VREFH0 = 2.7 V to AVCC0

Item		Symbol	Min	Max	Unit	Test conditions
Simple SPI	Slave access time	t_{SA}	-	10 (PCLKA > 32 MHz), 6 (PCLKA ≤ 32 MHz)	t_{Pcyc}	Figure 2.54 and Figure 2.55 PCLKB = PCLKA
	Slave output release time	t_{REL}	-	10 (PCLKA > 32 MHz), 6 (PCLKA ≤ 32 MHz)	t_{Pcyc}	

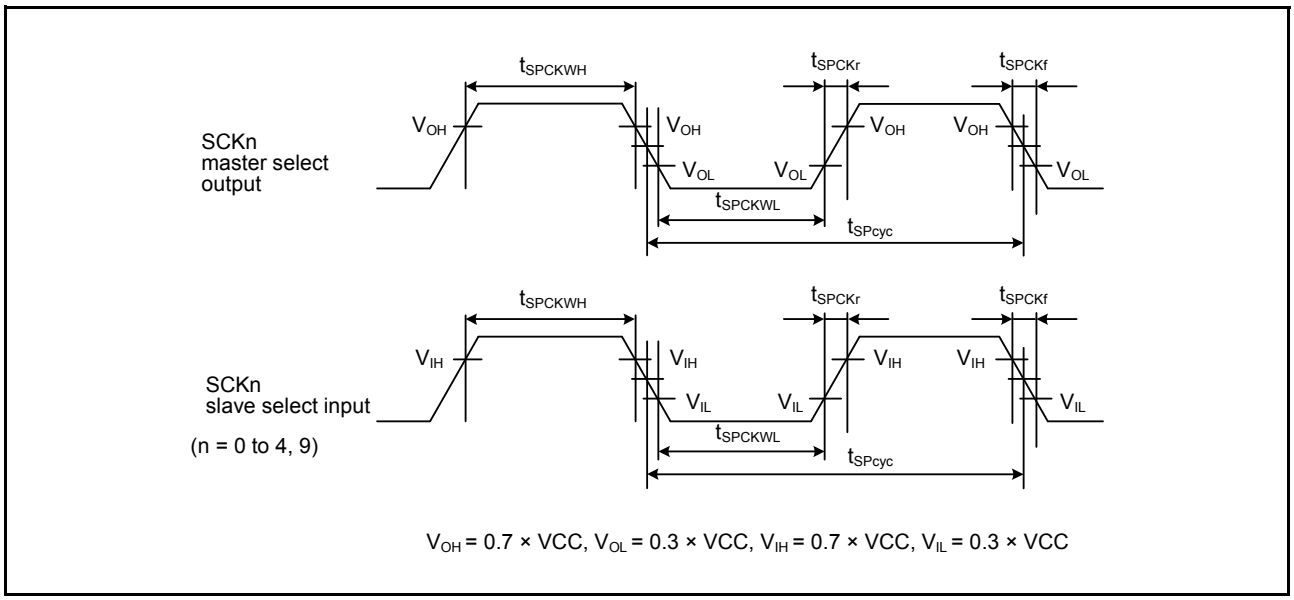

Figure 2.51 SCI simple SPI mode clock timing

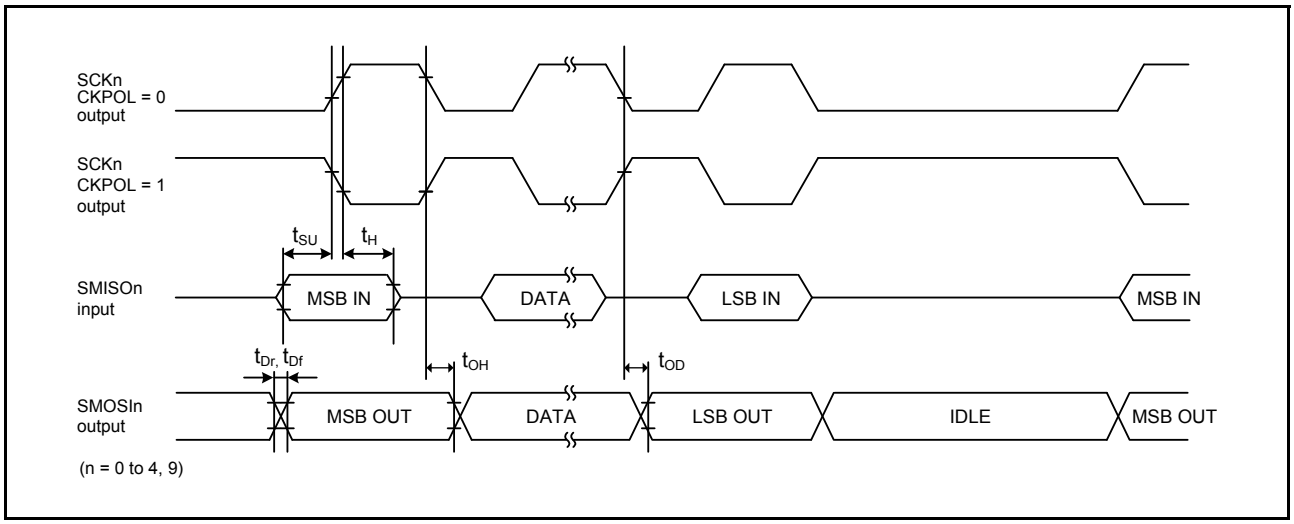

Figure 2.52 SCI simple SPI mode timing (master, CKPH = 1)

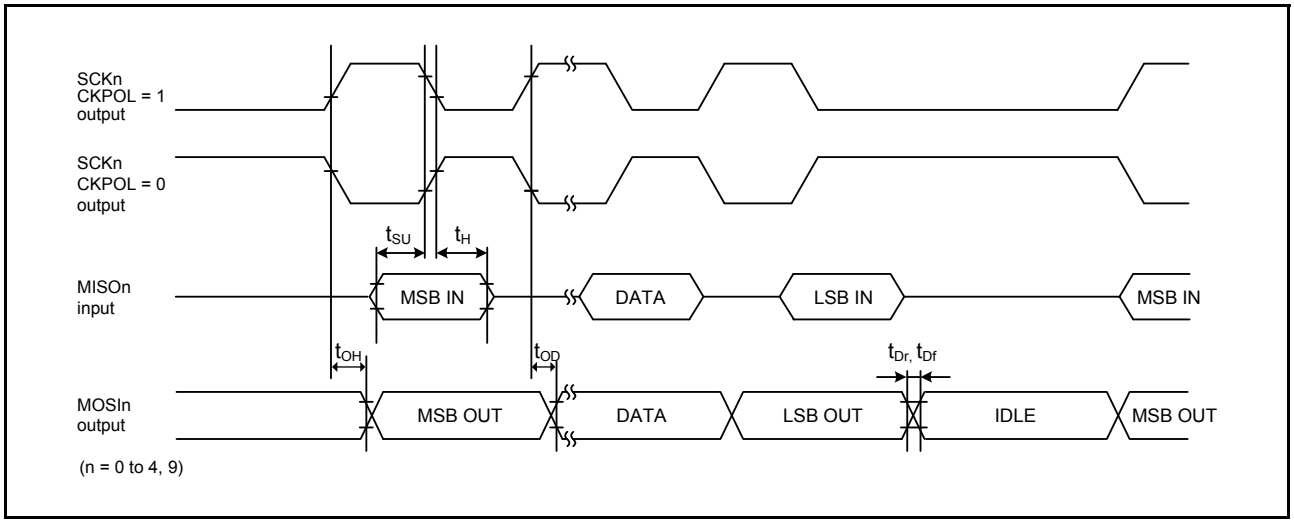

Figure 2.53 SCI simple SPI mode timing (master, CKPH = 0)

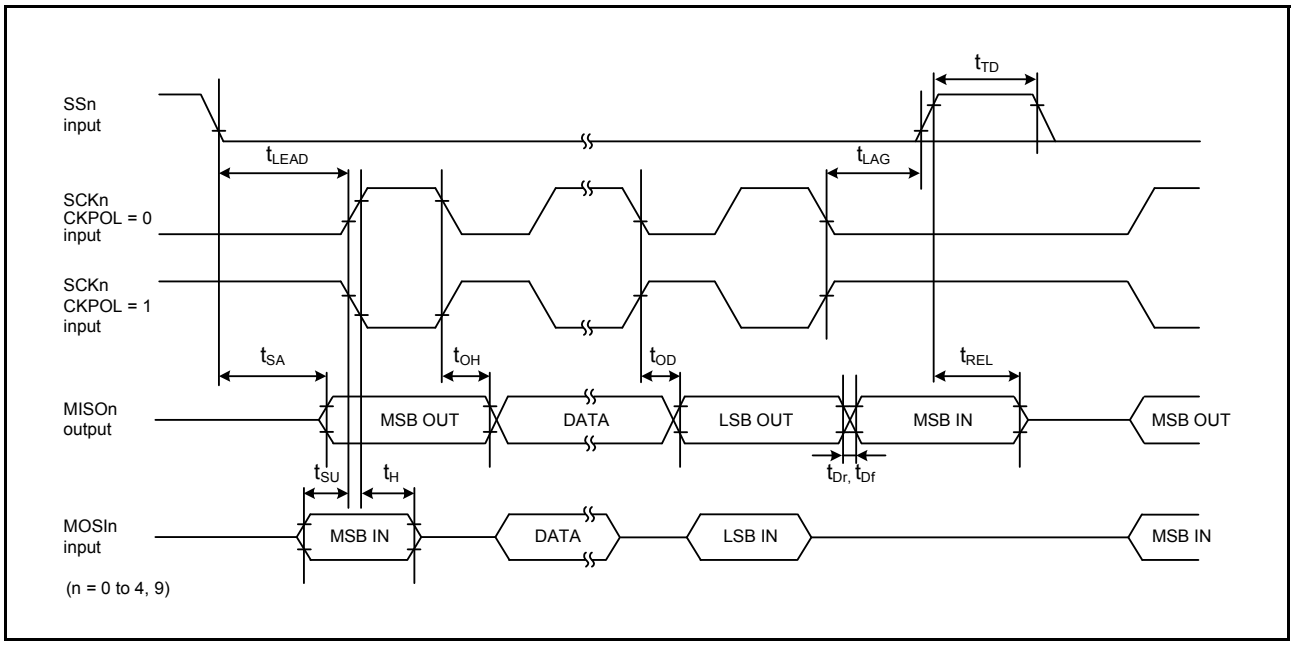

Figure 2.54 SCI simple SPI mode timing (slave, CKPH = 1)

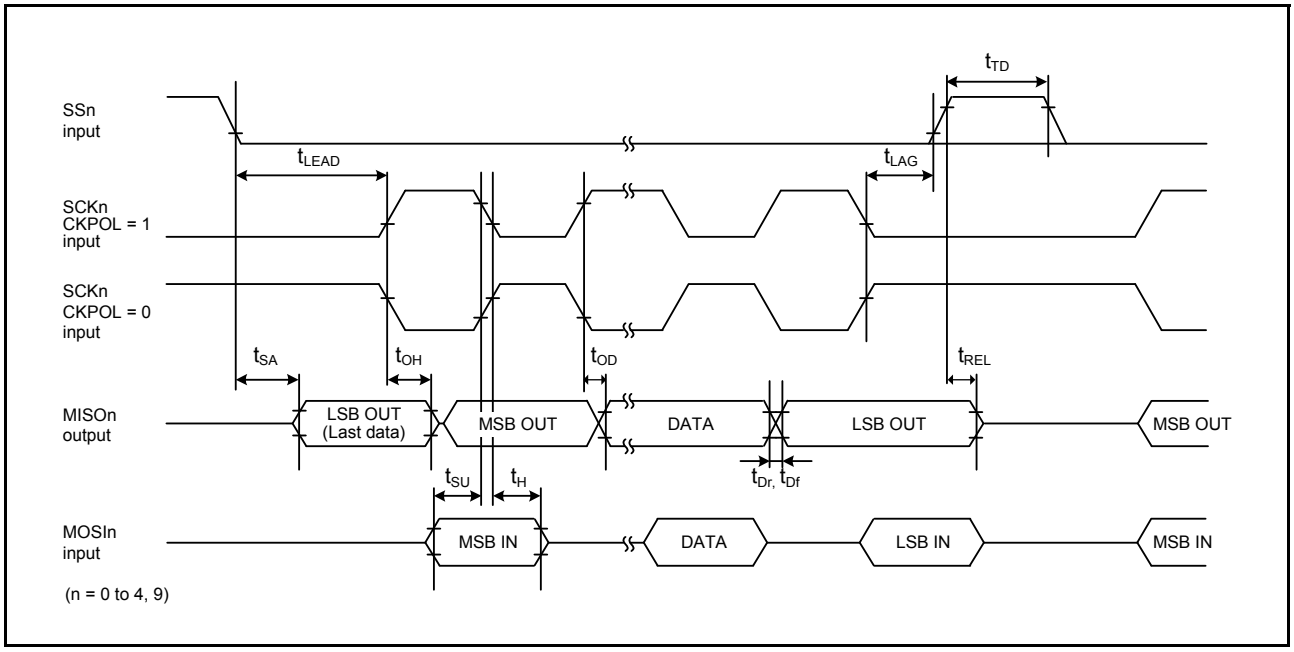

Figure 2.55 SCI simple SPI mode timing (slave, CKPH = 0)

Table 2.39 SCI timing (3)

Conditions: VCC = 2.7 to 5.5 V

Item		Symbol	Min	Max	Unit	Test conditions
Simple IIC (Standard mode)	SDA input rise time	t_{Sr}	-	1000	ns	Figure 2.56
	SDA input fall time	t_{Sf}	-	300	ns	
	SDA input spike pulse removal time	t_{SP}	0	4 × t_{IICcyc}	ns	
	Data input setup time	t_{SDAS}	250	-	ns	
	Data input hold time	t_{SDAH}	0	-	ns	
	SCL, SDA capacitive load	C_b*2	-	400	pF	
Simple IIC (Fast mode)	SCL, SDA input rise time	t_{Sr}	-	300	ns	Figure 2.56
	SCL, SDA input fall time	t_{Sf}	-	300	ns	
	SCL, SDA input spike pulse removal time	t_{SP}	0	4 × t_{IICcyc}	ns	
	Data input setup time	t_{SDAS}	100	-	ns	
	Data input hold time	t_{SDAH}	0	-	ns	
	SCL, SDA capacitive load	C_b*2	-	400	pF	

Note 1. t_{IICcyc}: IIC internal reference clock (IICφ) Cycle, t_{Pcyc}: PCLKB cycle.

Note 2. Cb indicates the total capacity of the bus line.

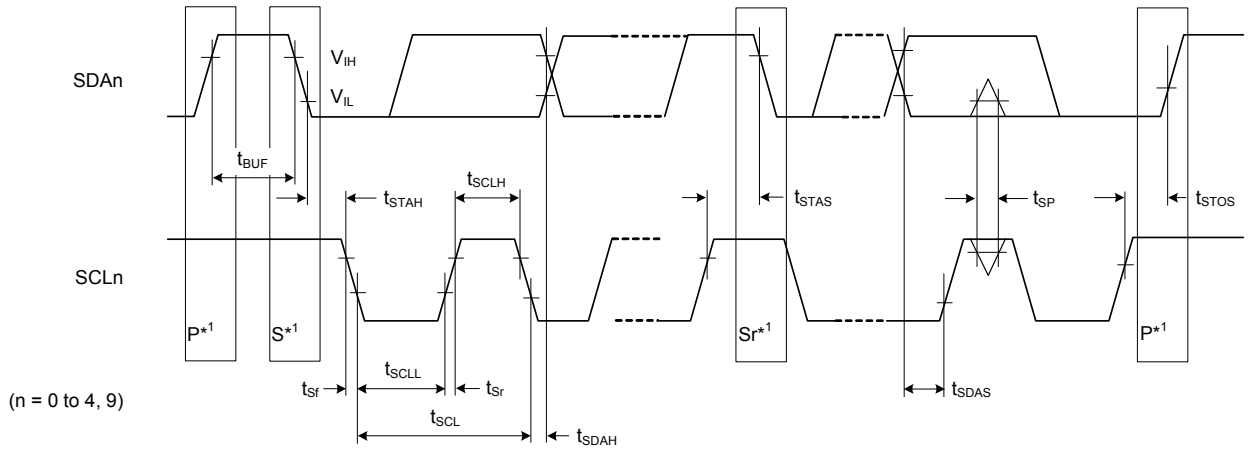

Note 1. S, P, and Sr indicate the following conditions.
S: Start condition
P: Stop condition
Sr: Restart condition

Figure 2.56 SCI simple IIC mode timing

2.3.10 SPI Timing

Table 2.40 SPI timing (1/2)

Conditions: Middle drive output is selected in the Drive Strength Control in PmnPFS register

Item				Symbol	Min	Max	Unit*1	Test conditions
SPI	RSPCK clock cycle	Master		t_{SPcyc}	2	4096	t_{Pcyc}	Figure 2.57 C = 30pF
		Slave			6	4096		
	RSPCK clock high pulse width	Master		t_{SPCKWH}	$(t_{SPcyc} - t_{SPCKR} - t_{SPCKF}) / 2 - 3$	-	ns	
		Slave			$3 \times t_{Pcyc}$	-		
	RSPCK clock low pulse width	Master		t_{SPCKWL}	$(t_{SPcyc} - t_{SPCKR} - t_{SPCKF}) / 2 - 3$	-	ns	
		Slave			$3 \times t_{Pcyc}$	-		
	RSPCK clock rise and fall time	Output	2.7 V or above	t_{SPCKr}, t_{SPCKf}	-	10	ns	
			2.4 V or above		-	15		
			1.8 V or above		-	20		
			1.6 V or above		-	30		
		Input			-	1	μs	
	Data input setup time	Master		t_{SU}	10	-	ns	Figure 2.58 to Figure 2.63 C = 30pF
		Slave	2.4 V or above		10	-		
			1.8 V or above		15	-		
			1.6 V or above		20	-		
	Data input hold time	Master (RSPCK is PCLKA/2)		t_{HF}	0	-	ns	
		Master (RSPCK is other than above.)		t_H	t_{Pcyc}	-		
		Slave		t_H	20	-		
	SSL setup time	Master		t_{LEAD}	$-30 + N \times t_{Spcyc}$*2	-	ns	
		Slave			$6 \times t_{Pcyc}$	-	ns	
	SSL hold time	Master		t_{LAG}	$-30 + N \times t_{Spcyc}$*3	-	ns	
		Slave			$6 \times t_{Pcyc}$	-	ns	

Table 2.40 SPI timing (2/2)

Conditions: Middle drive output is selected in the Drive Strength Control in PmnPFS register

Item				Symbol	Min	Max	Unit*1	Test conditions
SPI	Data output delay	Master	2.7 V or above	t_{OD}	-	14	ns	Figure 2.58 to Figure 2.63 C = 30pF
			2.4 V or above		-	20		
			1.8 V or above		-	25		
			1.6 V or above		-	30		
		Slave	2.7 V or above		-	50		
			2.4 V or above		-	60		
			1.8 V or above		-	85		
			1.6 V or above		-	110		
	Data output hold time	Master		t_{OH}	0	-	ns	
		Slave			0	-		
	Successive transmission delay	Master		t_{TD}	$t_{SPcyc} + 2 \times t_{Pcyc}$	$8 \times t_{SPcyc} + 2 \times t_{Pcyc}$	ns	
		Slave			$6 \times t_{Pcyc}$	-		
	MOSI and MISO rise and fall time	Output	2.7 V or above	t_{Dr}, t_{Df}	-	10	ns	
			2.4 V or above		-	15		
			1.8 V or above		-	20		
			1.6 V or above		-	30		
		Input			-	1	μs	
	SSL rise and fall time	Output	2.7 V or above	t_{SSLr}, t_{SSLf}	-	10	ns	
			2.4 V or above		-	15		
			1.8 V or above		-	20		
			1.6 V or above		-	30		
		Input			-	1	μs	
	Slave access time		2.7 V or above	t_{SA}	-	$2 \times t_{Pcyc} + 50$	ns	Figure 2.62 and Figure 2.63 C = 30pF
			2.4 V or above		-	$2 \times t_{Pcyc} + 60$		
			1.8 V or above		-	$2 \times t_{Pcyc} + 85$		
			1.6 V or above		-	$2 \times t_{Pcyc} + 110$		
	Slave output release time		2.7 V or above	t_{REL}	-	$2 \times t_{Pcyc} + 50$	ns	
			2.4 V or above		-	$2 \times t_{Pcyc} + 60$		
			1.8 V or above		-	$2 \times t_{Pcyc} + 85$		
			1.6 V or above		-	$2 \times t_{Pcyc} + 110$		

Note 1. t_{Pcyc}: PCLKA cycle.

Note 2. N is set as an integer from 1 to 8 by the SPCKD register.

Note 3. N is set as an integer from 1 to 8 by the SSLND register.

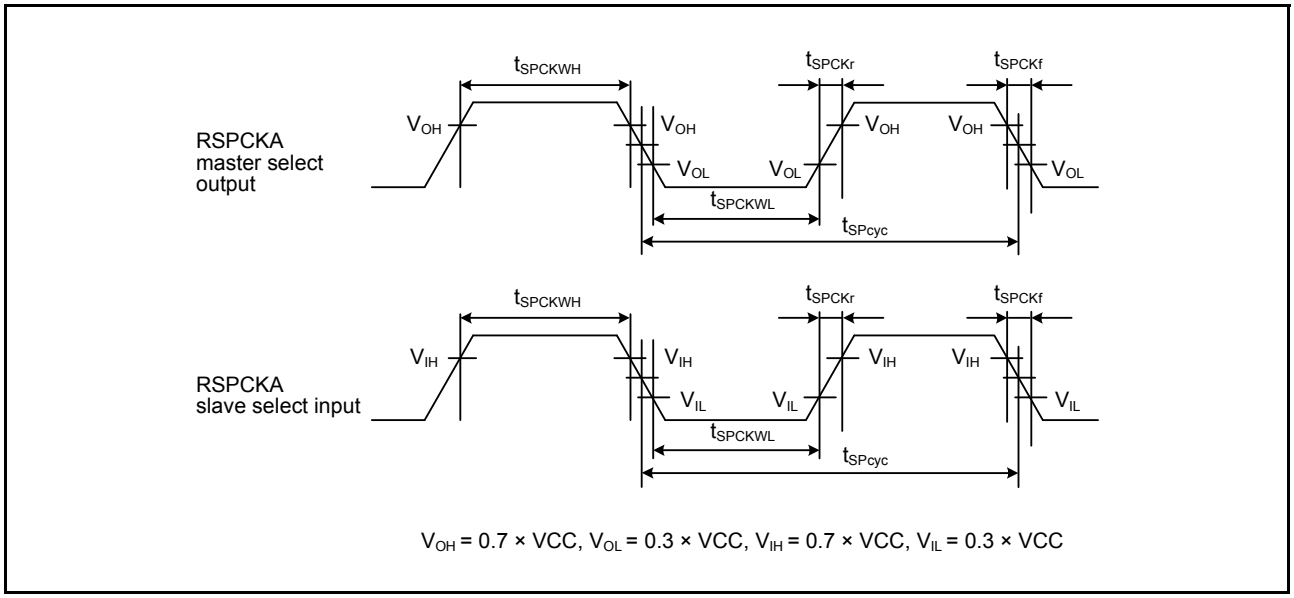

Figure 2.57 SPI clock timing

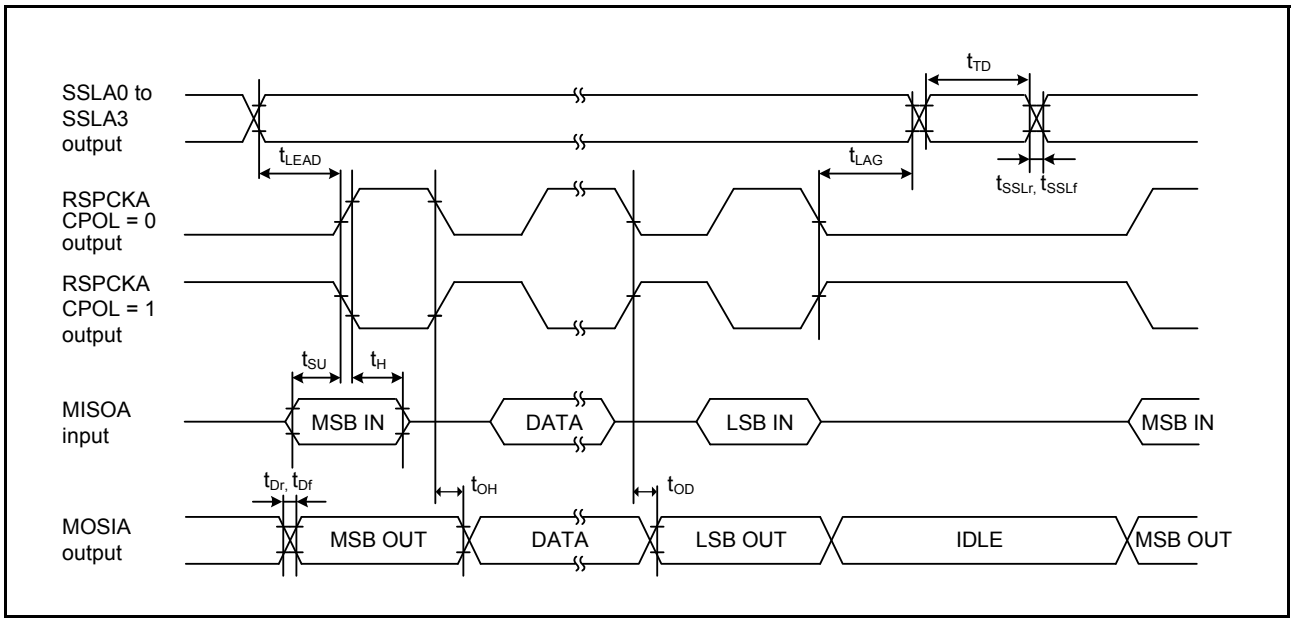

Figure 2.58 SPI timing (master, CPHA = 0) (bit rate: PCLKA division ratio is set to any value other than 1/2)

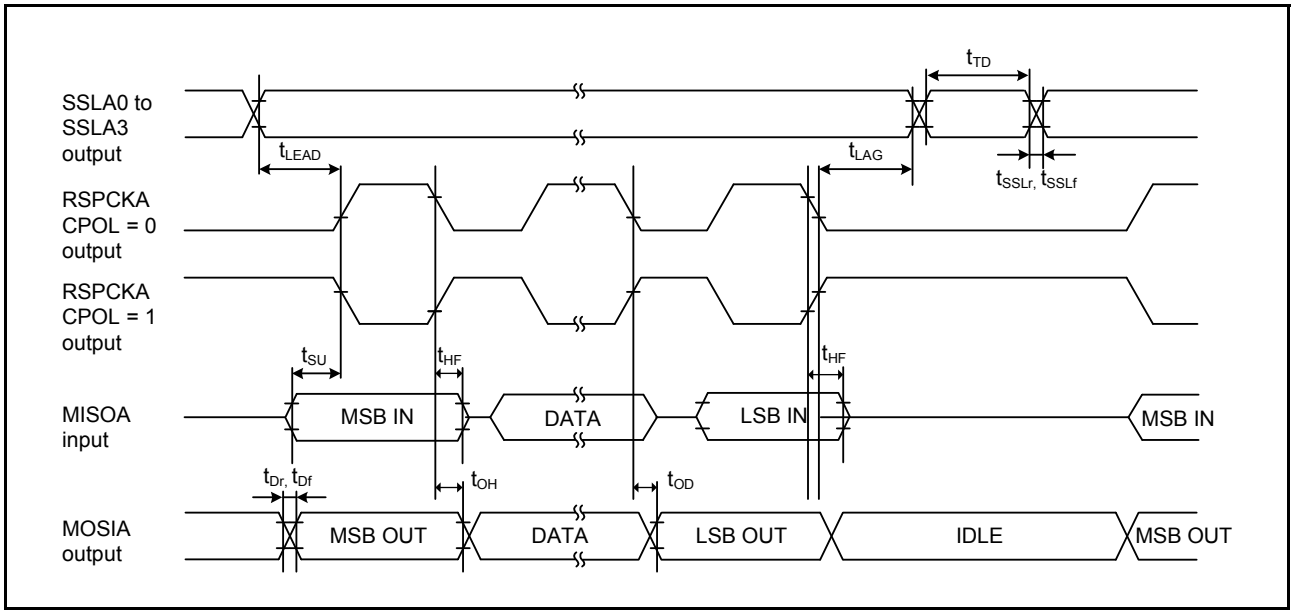

Figure 2.59 SPI timing (master, CPHA = 0) (bit rate: PCLKA division ratio is set to 1/2)

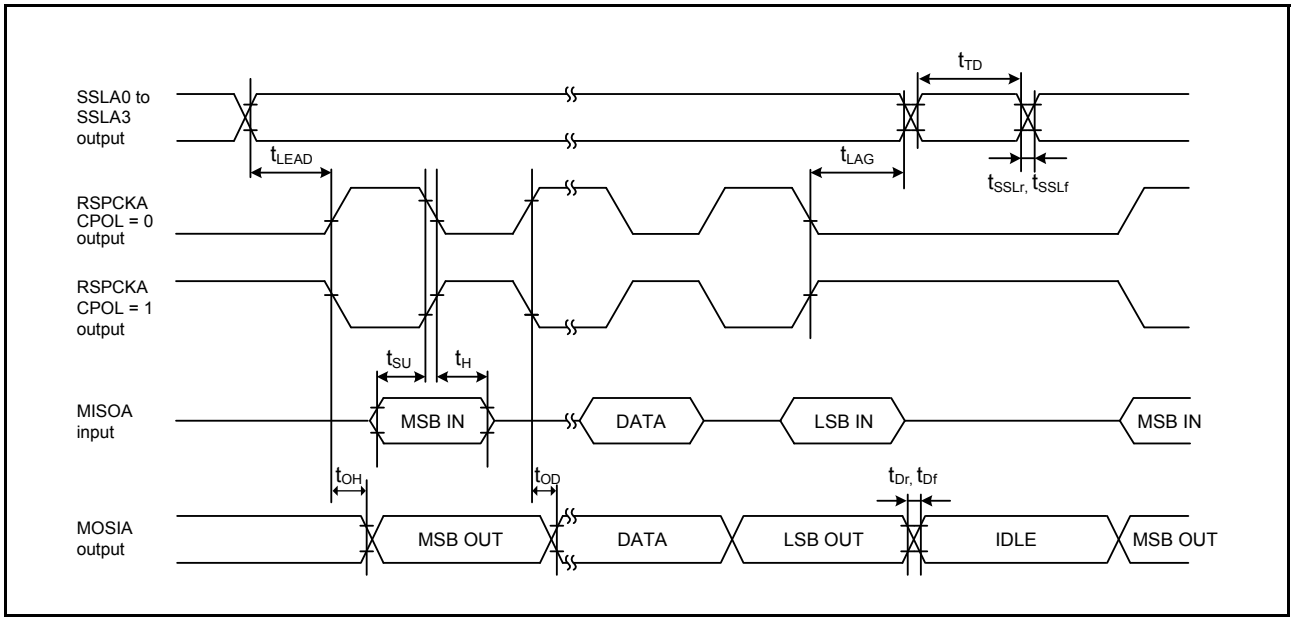

Figure 2.60 SPI timing (master, CPHA = 1) (bit rate: PCLKA division ratio is set to any value other than 1/2)

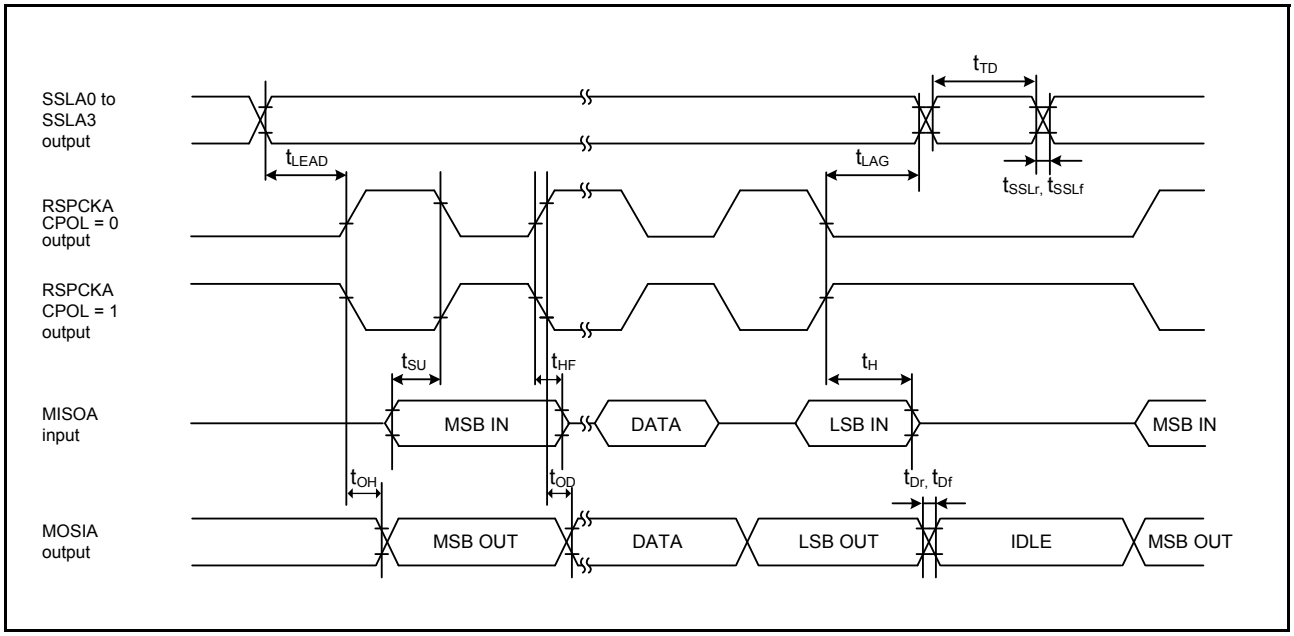

Figure 2.61 SPI timing (master, CPHA = 1) (bit rate: PCLKA division ratio is set to 1/2)

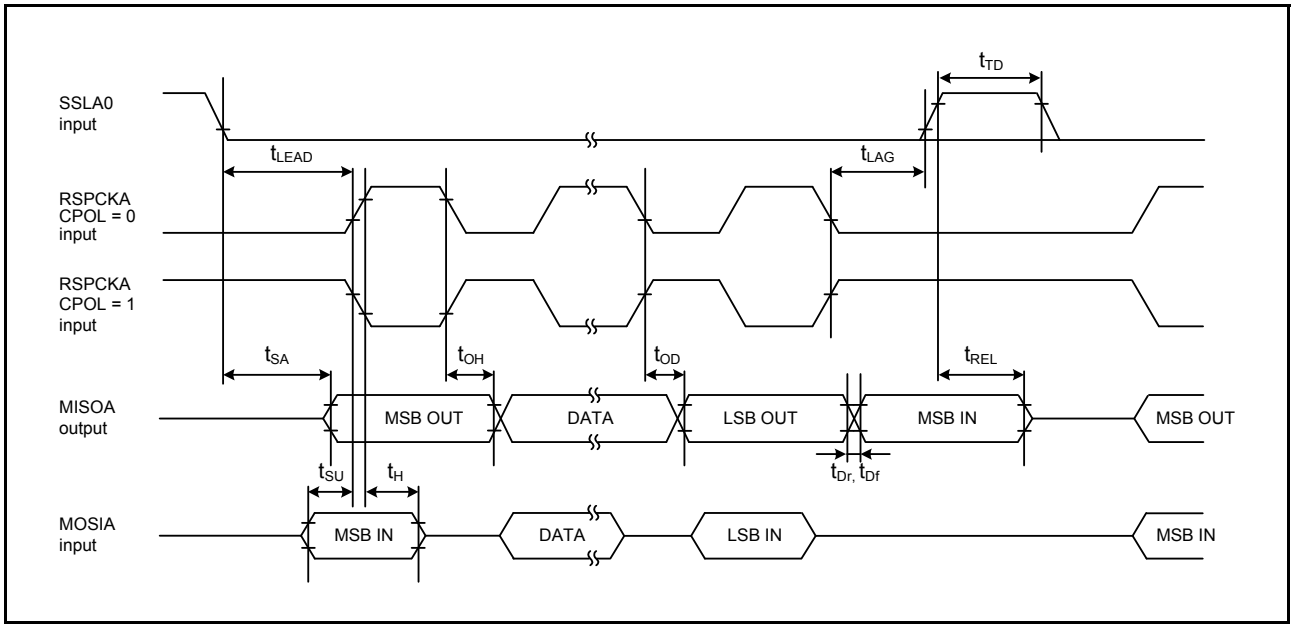

Figure 2.62 SPI timing (slave, CPHA = 0)

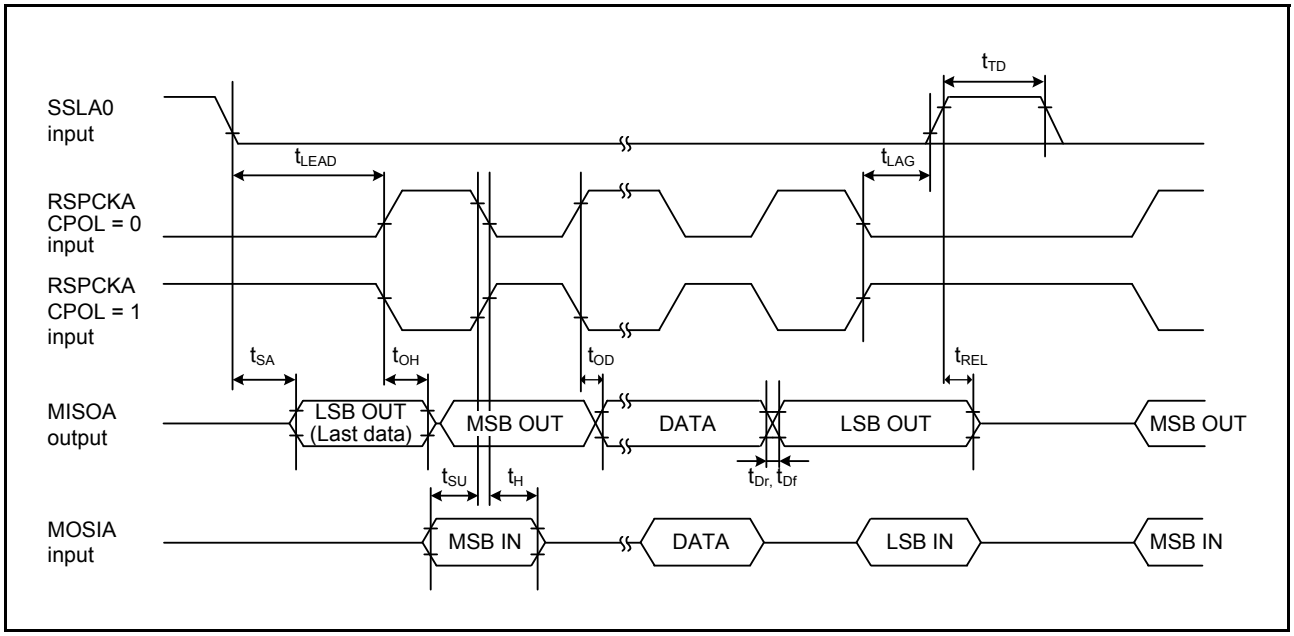

Figure 2.63 SPI timing (slave, CPHA = 1)

2.3.11 QSPI Timing

Table 2.41 QSPI timing

Conditions: VCC = AVCC0 = 1.8 to 5.5 V

Conditions: Middle drive output is selected in the Drive Capavility Control in PmnPFS register

Item			Symbol	Min	Max	Unit*1	Test conditions
QSPI	QSPCLK clock cycle		t_{QScyc}	2	48	t_{Pcyc}	Figure 2.64
	QSPCLK clock high-level pulse width		t_{QSWH}	t_{QScyc} × 0.4	-	ns	
	QSPCLK clock low-level pulse width		t_{QSWL}	t_{QScyc} × 0.4	-	ns	
	Data input setup time	2.7 V or above	t_{SU}	40	-	ns	Figure 2.65
		2.4 V or above		40	-	ns	
		1.8 V or above		80	-	ns	
	Data input hold time		t_{IH}	0	-	ns	
	SSL setup time		t_{LEAD}	(N + 0.5) × t_{Qscyc} - 15*2	(N + 0.5) × t_{Qscyc} + 100*2	ns	
	SSL hold time		t_{LAG}	(N + 0.5) × t_{Qscyc} - 15*3	(N + 0.5) × t_{Qscyc} + 100*3	ns	
	Data output delay	2.7 V or above	t_{OD}	-	14	ns	
		2.4 V or above		-	20		
		1.8 V or above		-	30		
	Data output hold time	2.7 V or above	t_{OH}	–3.3	-	ns	
		1.8 V or above		–10	-		
	Successive transmission delay		t_{TD}	1	16	t_{Qscyc}	

Note 1. t_{Pcyc}: PCLKA cycle.

Note 2. N is set to 0 or 1 in SFMSLD.

Note 3. N is set to 0 or 1 in SFMSHD.

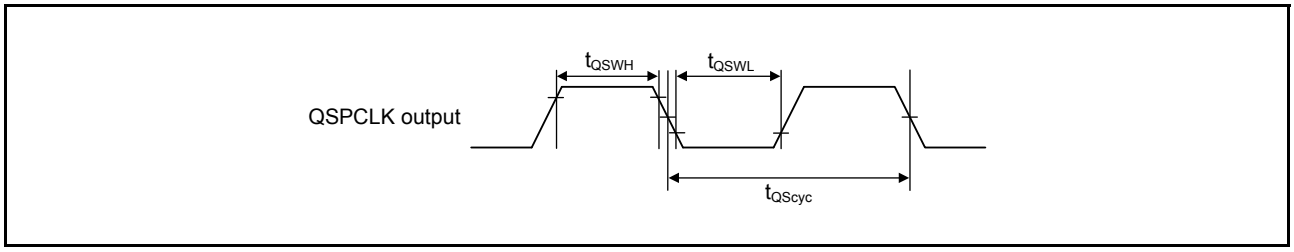

Figure 2.64 QSPI clock timing

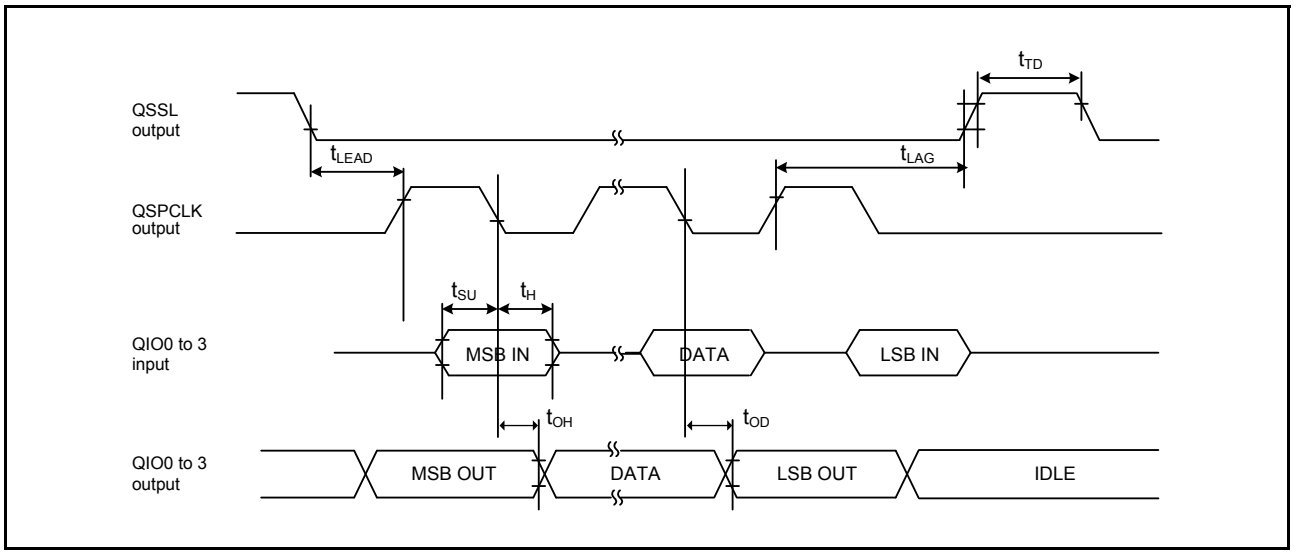

Figure 2.65 Transfer/receive timing

2.3.12 IIC Timing

Table 2.42 IIC timing
Conditions: VCC = AVCC0 = 2.7 to 5.5 V

Item		Symbol	Min*1, *2	Max	Unit	Test conditions
IIC (standard mode, SMBus)	SCL input cycle time	t_{SCL}	6 (12) × t_{IICcyc} + 1300	-	ns	Figure 2.66
	SCL input high pulse width	t_{SCLH}	3 (6) × t_{IICcyc} + 300	-	ns	
	SCL input low pulse width	t_{SCLL}	3 (6) × t_{IICcyc} + 300	-	ns	
	SCL, SDA input rise time	t_{Sr}	-	1000	ns	
	SCL, SDA input fall time	t_{Sf}	-	300	ns	
	SCL, SDA input spike pulse removal time	t_{SP}	0	1 (4) × t_{IICcyc}	ns	
	SDA input bus free time (When wakeup function is disabled)	t_{BUF}	3 (6) × t_{IICcyc} + 300	-	ns	
	SDA input bus free time (When wakeup function is enabled)	t_{BUF}	3 (6) × t_{IICcyc} + 4 × t_{Pcyc} + 300	-	ns	
	START condition input hold time (When wakeup function is disabled)	t_{STAH}	t_{IICcyc} + 300	-	ns	
	START condition input hold time (When wakeup function is enabled)	t_{STAH}	1 (5) × t_{IICcyc} + t_{Pcyc} + 300	-	ns	
	Repeated START condition input setup time	t_{STAS}	1000	-	ns	
	STOP condition input setup time	t_{STOS}	1000	-	ns	
	Data input setup time	t_{SDAS}	t_{IICcyc} + 50	-	ns	
	Data input hold time	t_{SDAH}	0	-	ns	
	SCL, SDA capacitive load	C_b	-	400	pF	
IIC (Fast mode)	SCL input cycle time	t_{SCL}	6 (12) × t_{IICcyc} + 600	-	ns	Figure 2.66
	SCL input high pulse width	t_{SCLH}	3 (6) × t_{IICcyc} + 300	-	ns	
	SCL input low pulse width	t_{SCLL}	3 (6) × t_{IICcyc} + 300	-	ns	
	SCL, SDA input rise time	t_{Sr}	20 × (external pullup voltage/5.5V)*2	300	ns	
	SCL, SDA input fall time	t_{Sf}	20 × (external pullup voltage/5.5V)*2	300	ns	
	SCL, SDA input spike pulse removal time	t_{SP}	0	1 (4) × t_{IICcyc}	ns	
	SDA input bus free time (When wakeup function is disabled)	t_{BUF}	3 (6) × t_{IICcyc} + 300	-	ns	
	SDA input bus free time (When wakeup function is enabled)	t_{BUF}	3 (6) × t_{IICcyc} + 4 × t_{Pcyc} + 300	-	ns	
	START condition input hold time (When wakeup function is disabled)	t_{STAH}	t_{IICcyc} + 300	-	ns	
	START condition input hold time (When wakeup function is enabled)	t_{STAH}	1(5) × t_{IICcyc} + t_{Pcyc} + 300	-	ns	
	Repeated START condition input setup time	t_{STAS}	300	-	ns	
	STOP condition input setup time	t_{STOS}	300	-	ns	
	Data input setup time	t_{SDAS}	t_{IICcyc} + 50	-	ns	
	Data input hold time	t_{SDAH}	0	-	ns	
	SCL, SDA capacitive load	C_b	-	400	pF	

Note: t_{IICcyc}: IIC internal reference clock (IICφ) cycle, t_{Pcyc}: PCLKB cycle
Note 1. The value in parentheses apply when ICMR3.NF[1:0] is set to 11b while the digital filter is enabled with ICFER.NFE set to 1.
Note 2. Only supported for SCL0_A, SDA0_A, SCL2, and SDA2.

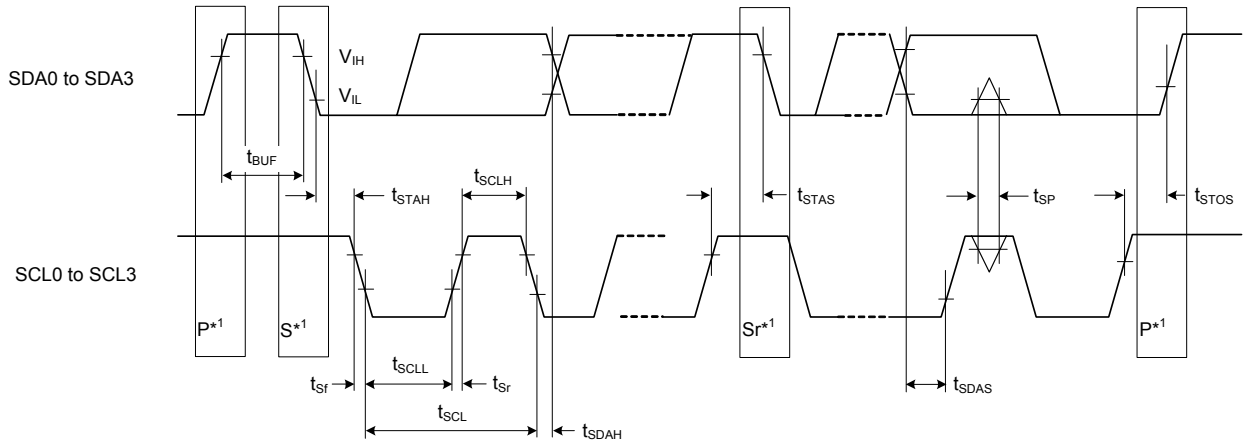

Note 1. S, P, and Sr indicate the following conditions.
S: Start condition
P: Stop condition
Sr: Restart condition

Figure 2.66 I²C bus interface input/output timing

2.3.13 SSI Timing

Table 2.43 SSI timing
Conditions: VCC = AVCC0 = 1.6 to 5.5 V

Item			Symbol	Min	Max	Unit	Test conditions
SSI	AUDIO_CLK input frequency	2.7 V or above	t_{AUDIO}	-	25	MHz	-
		1.6 V or above		-	4		
	Output clock period		t_O	250	-	ns	Figure 2.67
	Input clock period		t_I	250	-	ns	
	Clock high pulse width	1.8 V or above	t_{HC}	100	-	ns	
		1.6 V or above		200	-		
	Clock low pulse width	1.8 V or above	t_{LC}	100	-	ns	
		1.6 V or above		200	-		
	Clock rise time		t_{RC}	-	25	ns	
	Data delay	2.7 V or above	t_{DTR}	-	65	ns	Figure 2.68, Figure 2.69
		1.8 V or above		-	105		
		1.6 V or above		-	140		
	Set-up time	2.7 V or above	t_{SR}	65	-	ns	
		1.8 V or above		90	-		
		1.6 V or above		140	-		
	Hold time		t_{HTR}	40	-	ns	
	SSIDATA output delay from WS change time	1.8 V or above	T_{DTRW}	-	105	ns	Figure 2.70
		1.6 V or above		-	140		

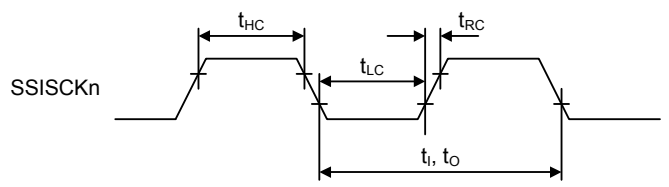

Figure 2.67 SSI clock input/output timing

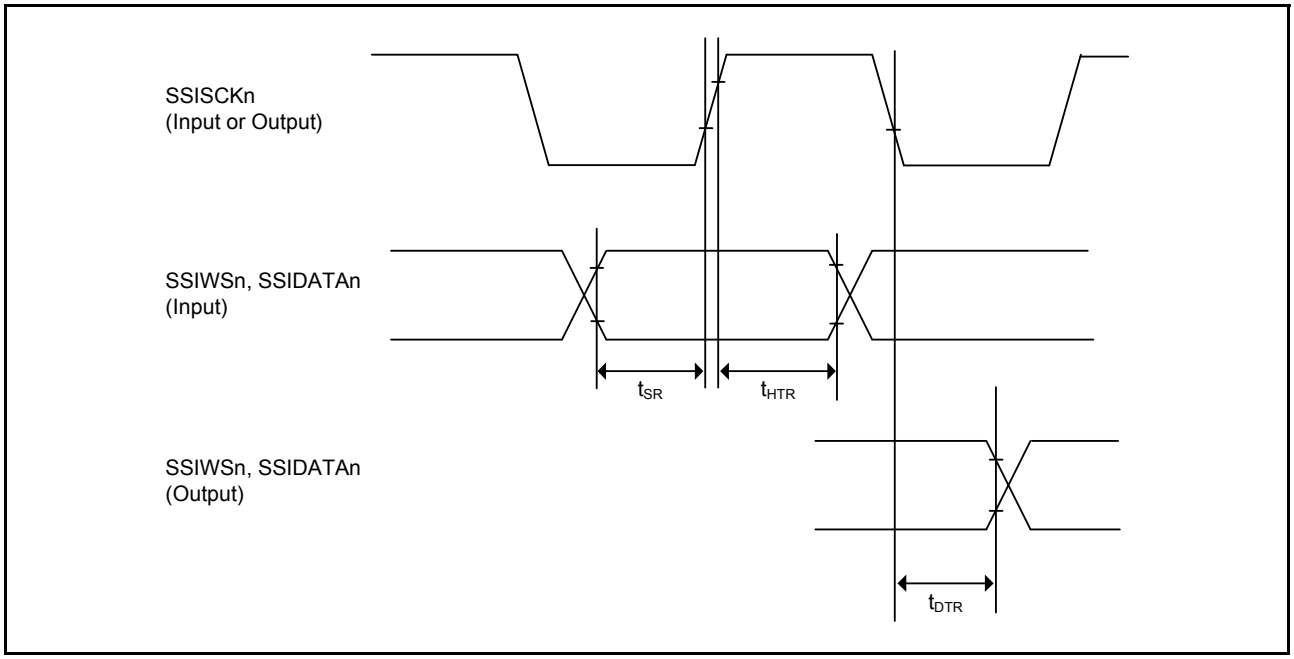

Figure 2.68 SSI data transmit/receive timing (SSICR.SCKP = 0)

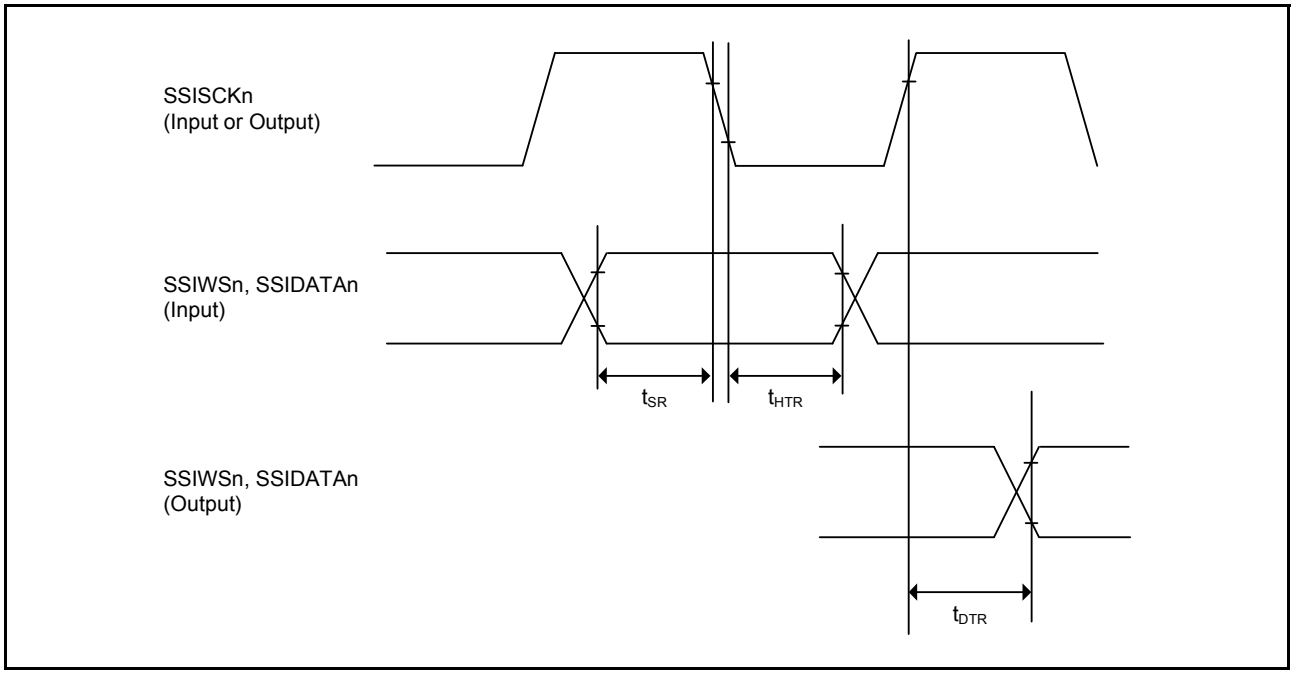

Figure 2.69 SSI data transmit/receive timing (SSICR.SCKP = 1)

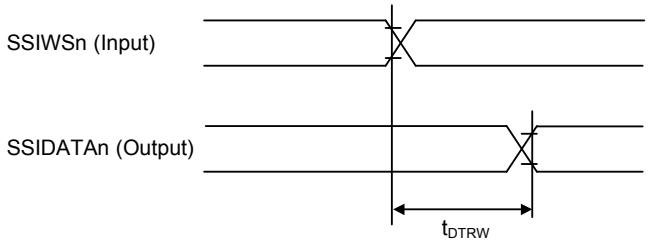

MSB bit output delay from SSIWSn change time for Slave transmitter when DEL = 1, SDTA = 0 or DEL = 1, SDTA = 1, SWL[2:0] = DWL[2:0]

Figure 2.70 SSI data output delay from SSIWSn change time

2.3.14 SD/MMC Host Interface Timing

Table 2.44 SD/MMC host interface signal timing

Conditions: VCC = AVCC0 = 2.7 to 5.5 V
Middle drive output is selected in the Drive Capavility Control in PmnPFS register

Item	Symbol	Min	Max	Unit	Test conditions
SDCLK clock cycle	t_{SDCYC}	62.5	-	ns	Figure 2.71
SDCLK clock high-level pulse width	t_{SDWH}	18.25	-	ns	
SDCLK clock low-level pulse width	t_{SDWL}	18.25	-	ns	
SDCLK clock rising time	t_{SDLH}	-	10	ns	
SDCLK clock falling time	t_{SDHL}	-	10	ns	
SDCMD/SDDAT output data delay	t_{SDODLY}	–18.25	18.25	ns	
SDCMD/SDDAT input data setup	t_{SDIS}	9.25	-	ns	
SDCMD/SDDAT input data hold	t_{SDIH}	23.25	-	ns	

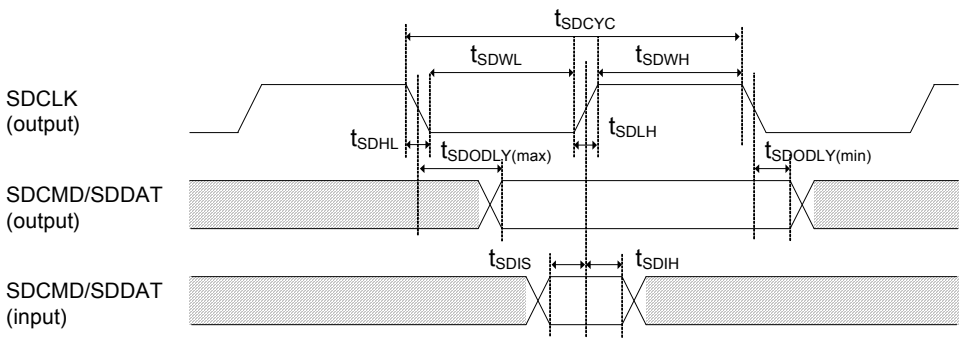

Figure 2.71 SD/MMC host interface signal timing

2.3.15 CLKOUT Timing

Table 2.45 CLKOUT timing

Item			Symbol	Min	Max	Unit*1	Test conditions
CLKOUT	CLKOUT pin output cycle*1	VCC = 2.7 V or above	t_{Ccyc}	62.5	-	ns	Figure 2.72
		VCC = 1.8 V or above		125	-		
		VCC = 1.6 V or above		250	-		
	CLKOUT pin high pulse width*2	VCC = 2.7 V or above	t_{CH}	15	-	ns	
		VCC = 1.8 V or above		30	-		
		VCC = 1.6 V or above		150	-		
	CLKOUT pin low pulse width*2	VCC = 2.7 V or above	t_{CL}	15	-	ns	
		VCC = 1.8 V or above		30	-		
		VCC = 1.6 V or above		150	-		
	CLKOUT pin output rise time	VCC = 2.7 V or above	t_{Cr}	-	12	ns	
		VCC = 1.8 V or above		-	25		
		VCC = 1.6 V or above		-	50		
	CLKOUT pin output fall time	VCC = 2.7 V or above	t_{Cf}	-	12	ns	
		VCC = 1.8 V or above		-	25		
		VCC = 1.6 V or above		-	50		

Note 1. When the EXTAL external clock input or an oscillator is used with division by 1 (the CKOCR.CKOSEL[2:0] bits are 011b and the CKOCR.CKODIV[2:0] bits are 000b) to output from CLKOUT, the above should be satisfied with an input duty cycle of 45 to 55%.

Note 2. When the MOCO is selected as the clock output source (the CKOCR.CKOSEL[2:0] bits are 001b), set the clock output division ratio selection to be divided by 2 (the CKOCR.CKODIV[2:0] bits are 001b).

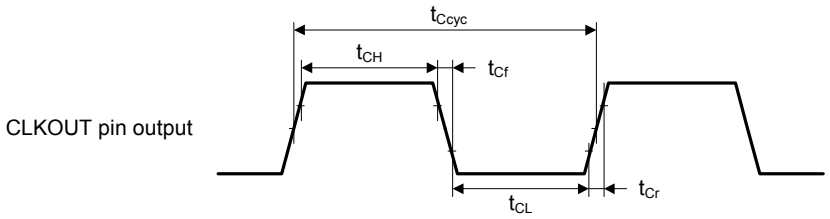

Test conditions: V_{OH} = VCC × 0.7, V_{OL} = VCC × 0.3, I_{OH} = -1.0 mA, I_{OL} = 1.0 mA, C = 30 pF

Figure 2.72 CLKOUT output timing

2.4 USB Characteristics

2.4.1 USBFS Timing

Table 2.46 USB characteristics

Conditions: VCC = AVCC0 = VCC_USB = 3.0 to 5.5 V

Item			Symbol	Min	Max	Unit	Test conditions
Input characteristics	Input high level voltage		V_{IH}	2.0	-	V	-
	Input low level voltage		V_{IL}	-	0.8	V	-
	Differential input sensitivity		V_{DI}	0.2	-	V	| USB_DP - USB_DM |
	Differential common mode range		V_{CM}	0.8	2.5	V	-
Output characteristics	Output high level voltage		V_{OH}	2.8	VCC_USB	V	I_{OH} = –200 μA
	Output low level voltage		V_{OL}	0.0	0.3	V	I_{OL}= 2 mA
	Cross-over voltage		V_{CRS}	1.3	2.0	V	Figure 2.73, Figure 2.74, Figure 2.75
	Rise time	FS	t_r	4	20	ns	
		LS		75	300		
	Fall time	FS	t_f	4	20	ns	
		LS		75	300		
	Rise/fall time ratio	FS	t_r/t_f	90	111.11	%	
		LS		80	125		
	Output resistance		Z_{DRV}	28	44	Ω	(Adjusting the resistance of external elements is not necessary.)
VBUS characteristics	VBUS input voltage		V_{IH}	VCC × 0.8	-	V	-
			V_{IL}	-	VCC × 0.2	V	-
Pull-up, pull-down	Pull-down resistor		R_{PD}	14.25	24.80	kΩ	-
	Pull-up resistor		R_{PUI}	0.9	1.575	kΩ	During idle state
			R_{PUA}	1.425	3.09	kΩ	During reception
Battery Charging Specification Ver 1.2	D + sink current		I_{DP_SINK}	25	175	μA	-
	D – sink current		I_{DM_SINK}	25	175	μA	-
	DCD source current		I_{DP_SRC}	7	13	μA	-
	Data detection voltage		V_{DAT_REF}	0.25	0.4	V	-
	D + source voltage		V_{DP_SRC}	0.5	0.7	V	Output current = 250 μA
	D – source voltage		V_{DM_SRC}	0.5	0.7	V	Output current = 250 μA

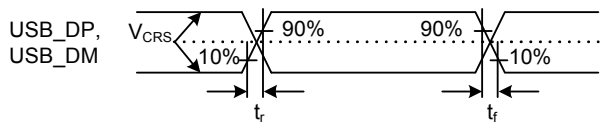

Figure 2.73 USB_DP and USB_DM output timing

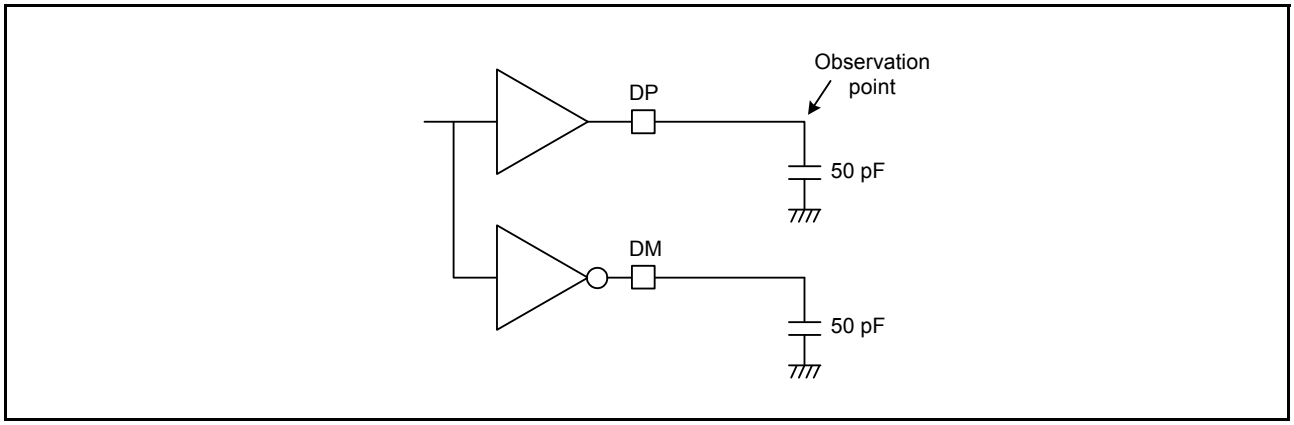

Figure 2.74 Test circuit for Full-Speed (FS) connection

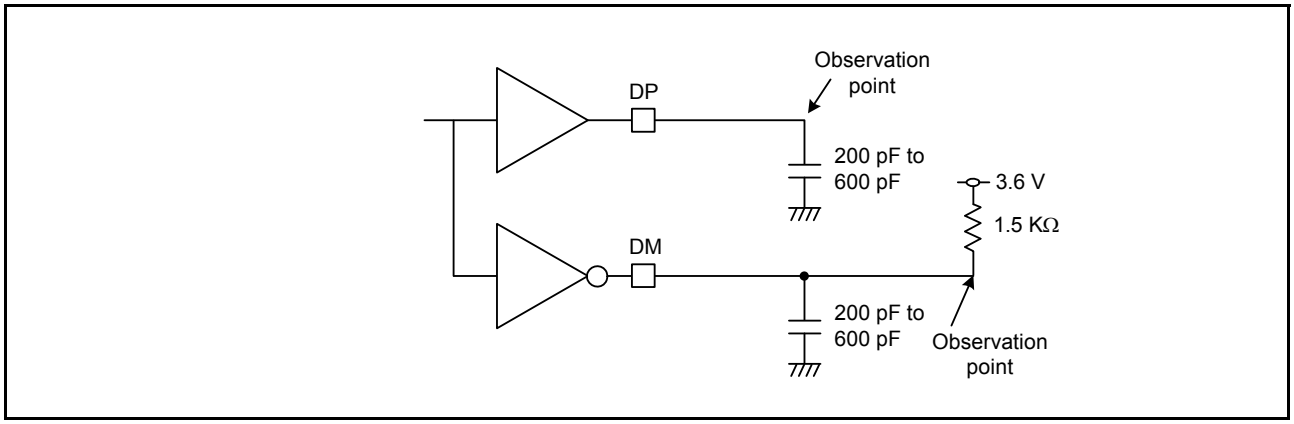

Figure 2.75 Test circuit for Low-Speed (LS) connection

2.4.2 USB External Supply

Table 2.47 USB regulator

Item		Min	Typ	Max	Unit	Test conditions
VCC_USB supply current	VCC_USB_LDO ≥ 3.8V	-	-	50	mA	-
	VCC_USB_LDO ≥ 4.5V	-	-	100	mA	-
VCC_USB supply voltage		3.0	-	3.6	V	-

2.5 ADC14 Characteristics

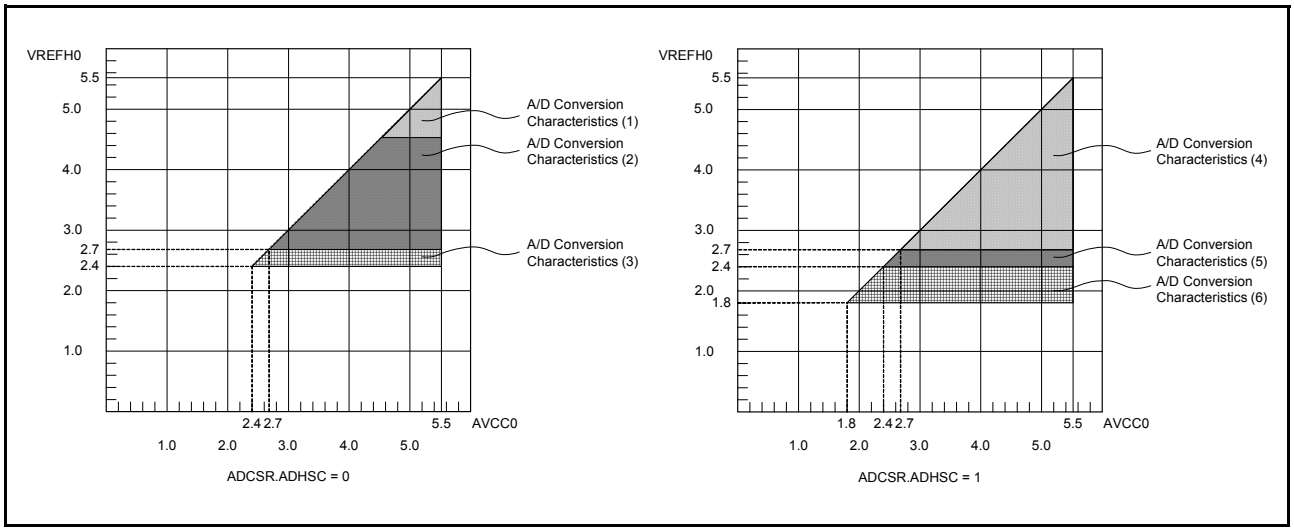

Figure 2.76 AVCC0 to VREFH0 voltage range

Table 2.48 A/D conversion characteristics (1) in high-speed mode (1/2)

Conditions: VCC = AVCC0 = 4.5 to 5.5 V, VREFH0 = 4.5 to 5.5 V, VSS = AVSS0 = VREFL0 = 0V
Reference voltage range applied to the VREFH0 and VREFL0.

Item		Min	Typ	Max	Unit	Test conditions
Frequency		1	-	64	MHz	-
Analog input capacitance	Cs	-	-	15	pF	High-precision channel
		-	-	30	pF	Normal-precision channel
Analog input resistance	Rs	-	-	2.5	kΩ	-
Analog input voltage range	Ain	0	-	VREFH0	V	-
12-bit mode						
Resolution		-	-	12	Bit	-
Conversion time*1 (Operation at PCLKC = 64 MHz)	Permissible signal source impedance Max. = 0.3 kΩ	0.70	-	-	μs	High-precision channel ADCSR.ADHSC = 0 ADSSTRn.SST[7:0] = 0Dh
		1.13	-	-	μs	Normal-precision channel ADCSR.ADHSC = 0 ADSSTRn.SST[7:0] = 28h
Offset error		-	±0.5	±4.5	LSB	High-precision channel
				±6.0	LSB	Other than above
Full-scale error		-	±0.75	±4.5	LSB	High-precision channel
				±6.0	LSB	Other than above
Quantization error		-	±0.5	-	LSB	-
Absolute accuracy		-	±1.25	±5.0	LSB	High-precision channel
				±8.0	LSB	Other than above
DNL differential nonlinearity error		-	±1.0	-	LSB	-
INL integral nonlinearity error		-	±1.0	±3.0	LSB	-
14-bit mode						
Resolution		-	-	14	Bit	-

Table 2.48 A/D conversion characteristics (1) in high-speed mode (2/2)

Conditions: VCC = AVCC0 = 4.5 to 5.5 V, VREFH0 = 4.5 to 5.5 V, VSS = AVSS0 = VREFL0 = 0V
Reference voltage range applied to the VREFH0 and VREFL0.

Item		Min	Typ	Max	Unit	Test conditions
Conversion time*1 (Operation at PCLKC = 64 MHz)	Permissible signal source impedance Max. = 0.3 kΩ	0.80	-	-	μs	High-precision channel ADCSR.ADHSC = 0 ADSSTRn.SST[7:0] = 0Dh
		1.22	-	-	μs	Normal-precision channel ADCSR.ADHSC = 0 ADSSTRn.SST[7:0] = 28h
Offset error		-	±2.0	±18	LSB	High-precision channel
				±24.0	LSB	Other than above
Full-scale error		-	±3.0	±18	LSB	High-precision channel
				±24.0	LSB	Other than above
Quantization error		-	±0.5	-	LSB	-
Absolute accuracy		-	±5.0	±20	LSB	High-precision channel
				±32.0	LSB	Other than above
DNL differential nonlinearity error		-	±4.0	-	LSB	-
INL integral nonlinearity error		-	±4.0	±12.0	LSB	-

Note: The characteristics apply when no pin functions other than 14-bit A/D converter input are used. Absolute accuracy does not include quantization errors. Offset error, full-scale error, DNL differential nonlinearity error, and INL integral nonlinearity error do not include quantization errors.

Note 1. The conversion time is the sum of the sampling time and the comparison time. The number of sampling states is indicated for the test conditions.

Table 2.49 A/D conversion characteristics (2) in high-speed mode (1/2)

Conditions: VCC = AVCC0 = 2.7 to 5.5 V, VREFH0 = 2.7 to 5.5 V, VSS = AVSS0 = VREFL0 = 0V
Reference voltage range applied to the VREFH0 and VREFL0.

Item		Min	Typ	Max	Unit	Test conditions
Frequency		1	-	48	MHz	-
Analog input capacitance	Cs	-	-	15	pF	High-precision channel
		-	-	30	pF	Normal-precision channel
Analog input resistance	Rs	-	-	2.5	kΩ	-
Analog input voltage range	Ain	0	-	VREFH0	V	-
12-bit mode						
Resolution		-	-	12	Bit	-
Conversion time*1 (Operation at PCLKC = 48 MHz)	Permissible signal source impedance Max. = 0.3 kΩ	0.94	-	-	μs	High-precision channel ADCSR.ADHSC = 0 ADSSTRn.SST[7:0] = 0Dh
		1.50	-	-	μs	Normal-precision channel ADCSR.ADHSC = 0 ADSSTRn.SST[7:0] = 28h
Offset error		-	±0.5	±4.5	LSB	High-precision channel
				±6.0	LSB	Other than above
Full-scale error		-	±0.75	±4.5	LSB	High-precision channel
				±6.0	LSB	Other than above
Quantization error		-	±0.5	-	LSB	-
Absolute accuracy		-	±1.25	±5.0	LSB	High-precision channel
				±8.0	LSB	Other than above
DNL differential nonlinearity error		-	±1.0	-	LSB	-
INL integral nonlinearity error		-	±1.0	±3.0	LSB	-
14-bit mode						
Resolution		-	-	14	Bit	-

Table 2.49 A/D conversion characteristics (2) in high-speed mode (2/2)

Conditions: VCC = AVCC0 = 2.7 to 5.5 V, VREFH0 = 2.7 to 5.5 V, VSS = AVSS0 = VREFL0 = 0V
Reference voltage range applied to the VREFH0 and VREFL0.

Item		Min	Typ	Max	Unit	Test conditions
Conversion time*1 (Operation at PCLKC = 48 MHz)	Permissible signal source impedance Max. = 0.3 kΩ	1.06	-	-	μs	High-precision channel ADCSR.ADHSC = 0 ADSSTRn.SST[7:0] = 0Dh
		1.63	-	-	μs	Normal-precision channel ADCSR.ADHSC = 0 ADSSTRn.SST[7:0] = 28h
Offset error		-	±2.0	±18	LSB	High-precision channel
				±24.0	LSB	Other than above
Full-scale error		-	±3.0	±18	LSB	High-precision channel
				±24.0	LSB	Other than above
Quantization error		-	±0.5	-	LSB	-
Absolute accuracy		-	±5.0	±20	LSB	High-precision channel
				±32.0	LSB	Other than above
DNL differential nonlinearity error		-	±4.0	-	LSB	-
INL integral nonlinearity error		-	±4.0	±12.0	LSB	-

Note: The characteristics apply when no pin functions other than 14-bit A/D converter input are used. Absolute accuracy does not include quantization errors. Offset error, full-scale error, DNL differential nonlinearity error, and INL integral nonlinearity error do not include quantization errors.

Note 1. The conversion time is the sum of the sampling time and the comparison time. The number of sampling states is indicated for the test conditions.

Table 2.50 A/D conversion characteristics (3) in high-speed mode (1/2)

Conditions: VCC = AVCC0 = 2.4 to 5.5 V, VREFH0 = 2.4 to 5.5 V, VSS = AVSS0 = VREFL0 = 0V
Reference voltage range applied to the VREFH0 and VREFL0.

Item		Min	Typ	Max	Unit	Test conditions
Frequency		1	-	32	MHz	-
Analog input capacitance	Cs	-	-	15	pF	High-precision channel
		-	-	30	pF	Normal-precision channel
Analog input resistance	Rs	-	-	2.5	kΩ	-
Analog input voltage range	Ain	0	-	VREFH0	V	-
12-bit mode						
Resolution		-	-	12	Bit	-
Conversion time*1 (Operation at PCLKC = 32 MHz)	Permissible signal source impedance Max. = 1.3 kΩ	1.41	-	-	μs	High-precision channel ADCSR.ADHSC = 0 ADSSTRn.SST[7:0] = 0Dh
		2.25	-	-	μs	Normal-precision channel ADCSR.ADHSC = 0 ADSSTRn.SST[7:0] = 28h
Offset error		-	±0.5	±4.5	LSB	High-precision channel
				±6.0	LSB	Other than above
Full-scale error		-	±0.75	±4.5	LSB	High-precision channel
				±6.0	LSB	Other than above
Quantization error		-	±0.5	-	LSB	-
Absolute accuracy		-	±1.25	±5.0	LSB	High-precision channel
				±8.0	LSB	Other than above
DNL differential nonlinearity error		-	±1.0	-	LSB	-
INL integral nonlinearity error		-	±1.0	±3.0	LSB	-
14-bit mode						
Resolution		-	-	14	Bit	-

Table 2.50 A/D conversion characteristics (3) in high-speed mode (2/2)

Conditions: VCC = AVCC0 = 2.4 to 5.5 V, VREFH0 = 2.4 to 5.5 V, VSS = AVSS0 = VREFL0 = 0V
Reference voltage range applied to the VREFH0 and VREFL0.

Item		Min	Typ	Max	Unit	Test conditions
Conversion time*1 (Operation at PCLKC = 32 MHz)	Permissible signal source impedance Max. = 1.3 kΩ	1.59	-	-	μs	High-precision channel ADCSR.ADHSC = 0 ADSSTRn.SST[7:0] = 0Dh
		2.44	-	-	μs	Normal-precision channel ADCSR.ADHSC = 0 ADSSTRn.SST[7:0] = 28h
Offset error		-	±2.0	±18	LSB	High-precision channel
				±24.0	LSB	Other than above
Full-scale error		-	±3.0	±18	LSB	High-precision channel
				±24.0	LSB	Other than above
Quantization error		-	±0.5	-	LSB	-
Absolute accuracy		-	±5.0	±20	LSB	High-precision channel
				±32.0	LSB	Other than above
DNL differential nonlinearity error		-	±4.0	-	LSB	-
INL integral nonlinearity error		-	±4.0	±12.0	LSB	-

Note: The characteristics apply when no pin functions other than 14-bit A/D converter input are used. Absolute accuracy does not include quantization errors. Offset error, full-scale error, DNL differential nonlinearity error, and INL integral nonlinearity error do not include quantization errors.

Note 1. The conversion time is the sum of the sampling time and the comparison time. The number of sampling states is indicated for the test conditions.

Table 2.51 A/D conversion characteristics (4) in low power mode (1/2)

Conditions: VCC = AVCC0 = 2.7 to 5.5 V, VREFH0 = 2.7 to 5.5 V, VSS = AVSS0 = VREFL0 = 0V
Reference voltage range applied to the VREFH0 and VREFL0.

Item		Min	Typ	Max	Unit	Test conditions
Frequency		1	-	24	MHz	-
Analog input capacitance	Cs	-	-	15	pF	High-precision channel
		-	-	30	pF	Normal-precision channel
Analog input resistance	Rs	-	-	2.5	kΩ	-
Analog input voltage range	Ain	0	-	VREFH0	V	-
12-bit mode						
Resolution		-	-	12	Bit	-
Conversion time*1 (Operation at PCLKC = 24 MHz)	Permissible signal source impedance Max. = 1.1 kΩ	2.25	-	-	μs	High-precision channel ADCSR.ADHSC = 1 ADSSTRn.SST[7:0] = 0Dh
		3.38	-	-	μs	Normal-precision channel ADCSR.ADHSC = 1 ADSSTRn.SST[7:0] = 28h
Offset error		-	±0.5	±4.5	LSB	High-precision channel
				±6.0	LSB	Other than above
Full-scale error		-	±0.75	±4.5	LSB	High-precision channel
				±6.0	LSB	Other than above
Quantization error		-	±0.5	-	LSB	-
Absolute accuracy		-	±1.25	±5.0	LSB	High-precision channel
				±8.0	LSB	Other than above
DNL differential nonlinearity error		-	±1.0	-	LSB	-
INL integral nonlinearity error		-	±1.0	±3.0	LSB	-
14-bit mode						
Resolution		-	-	14	Bit	-

Table 2.51 A/D conversion characteristics (4) in low power mode (2/2)

Conditions: VCC = AVCC0 = 2.7 to 5.5 V, VREFH0 = 2.7 to 5.5 V, VSS = AVSS0 = VREFL0 = 0V
Reference voltage range applied to the VREFH0 and VREFL0.

Item		Min	Typ	Max	Unit	Test conditions
Conversion time*1 (Operation at PCLKC = 24 MHz)	Permissible signal source impedance Max. = 1.1 kΩ	2.50	-	-	μs	High-precision channel ADCSR.ADHSC = 1 ADSSTRn.SST[7:0] = 0Dh
		3.63	-	-	μs	Normal-precision channel ADCSR.ADHSC = 1 ADSSTRn.SST[7:0] = 28h
Offset error		-	±2.0	±18	LSB	High-precision channel
				±24.0	LSB	Other than above
Full-scale error		-	±3.0	±18	LSB	High-precision channel
				±24.0	LSB	Other than above
Quantization error		-	±0.5	-	LSB	-
Absolute accuracy		-	±5.0	±20	LSB	High-precision channel
				±32.0	LSB	Other than above
DNL differential nonlinearity error		-	±4.0	-	LSB	-
INL integral nonlinearity error		-	±4.0	±12.0	LSB	-

Note: The characteristics apply when no pin functions other than 14-bit A/D converter input are used. Absolute accuracy does not include quantization errors. Offset error, full-scale error, DNL differential nonlinearity error, and INL integral nonlinearity error do not include quantization errors.

Note 1. The conversion time is the sum of the sampling time and the comparison time. The number of sampling states is indicated for the test conditions.

Table 2.52 A/D conversion characteristics (5) in low power mode (1/2)

Conditions: VCC = AVCC0 = 2.4 to 5.5 V, VREFH0 = 2.4 to 5.5 V, VSS = AVSS0 = VREFL0 = 0V
Reference voltage range applied to the VREFH0 and VREFL0.

Item		Min	Typ	Max	Unit	Test conditions
Frequency		1	-	16	MHz	-
Analog input capacitance	Cs	-	-	15	pF	High-precision channel
		-	-	30	pF	Normal-precision channel
Analog input resistance	Rs	-	-	2.5	kΩ	-
Analog input voltage range	Ain	0	-	VREFH0	V	-
12-bit mode						
Resolution		-	-	12	Bit	-
Conversion time*1 (Operation at PCLKC = 16 MHz)	Permissible signal source impedance Max. = 2.2 kΩ	3.38	-	-	μs	High-precision channel ADCSR.ADHSC = 1 ADSSTRn.SST[7:0] = 0Dh
		5.06	-	-	μs	Normal-precision channel ADCSR.ADHSC = 1 ADSSTRn.SST[7:0] = 28h
Offset error		-	±0.5	±4.5	LSB	High-precision channel
				±6.0	LSB	Other than above
Full-scale error		-	±0.75	±4.5	LSB	High-precision channel
				±6.0	LSB	Other than above
Quantization error		-	±0.5	-	LSB	-
Absolute accuracy		-	±1.25	±5.0	LSB	High-precision channel
				±8.0	LSB	Other than above
DNL differential nonlinearity error		-	±1.0	-	LSB	-
INL integral nonlinearity error		-	±1.0	±3.0	LSB	-
14-bit mode						
Resolution		-	-	14	Bit	-

Table 2.52 A/D conversion characteristics (5) in low power mode (2/2)

Conditions: VCC = AVCC0 = 2.4 to 5.5 V, VREFH0 = 2.4 to 5.5 V, VSS = AVSS0 = VREFL0 = 0V
Reference voltage range applied to the VREFH0 and VREFL0.

Item		Min	Typ	Max	Unit	Test conditions
Conversion time*1 (Operation at PCLKC = 16 MHz)	Permissible signal source impedance Max. = 2.2 kΩ	3.75	-	-	μs	High-precision channel ADCSR.ADHSC = 1 ADSSTRn.SST[7:0] = 0Dh
		5.44	-	-	μs	Normal-precision channel ADCSR.ADHSC = 1 ADSSTRn.SST[7:0] = 28h
Offset error		-	±2.0	±18	LSB	High-precision channel
				±24.0	LSB	Other than above
Full-scale error		-	±3.0	±18	LSB	High-precision channel
				±24.0	LSB	Other than above
Quantization error		-	±0.5	-	LSB	-
Absolute accuracy		-	±5.0	±20	LSB	High-precision channel
				±32.0	LSB	Other than above
DNL differential nonlinearity error		-	±4.0	-	LSB	-
INL integral nonlinearity error		-	±4.0	±12.0	LSB	-

Note: The characteristics apply when no pin functions other than 14-bit A/D converter input are used. Absolute accuracy does not include quantization errors. Offset error, full-scale error, DNL differential nonlinearity error, and INL integral nonlinearity error do not include quantization errors.

Note 1. The conversion time is the sum of the sampling time and the comparison time. The number of sampling states is indicated for the test conditions.

Table 2.53 A/D conversion characteristics (6) in low power mode (1/2)

Conditions: VCC = AVCC0 = 1.8 to 5.5 V (AVCC0 = VCC when VCC < 2.0 V), VREFH0 = 1.8 to 5.5 V, VSS = AVSS0 = VREFL0 = 0 V
Reference voltage range applied to the VREFH0 and VREFL0.

Item		Min	Typ	Max	Unit	Test conditions
Frequency		1	-	8	MHz	-
Analog input capacitance	Cs	-	-	15	pF	High-precision channel
		-	-	30	pF	Normal-precision channel
Analog input resistance	Rs	-	-	2.5	kΩ	-
Analog input voltage range	Ain	0	-	VREFH0	V	-
12-bit mode						
Resolution		-	-	12	Bit	-
Conversion time*1 (Operation at PCLKC = 8 MHz)	Permissible signal source impedance Max. = 5 kΩ	6.75	-	-	μs	High-precision channel ADCSR.ADHSC = 1 ADSSTRn.SST[7:0] = 0Dh
		10.13	-	-	μs	Normal-precision channel ADCSR.ADHSC = 1 ADSSTRn.SST[7:0] = 28h
Offset error		-	±1.0	±7.5	LSB	High-precision channel
				±10.0	LSB	Other than above
Full-scale error		-	±1.5	±7.5	LSB	High-precision channel
				±10.0	LSB	Other than above
Quantization error		-	±0.5	-	LSB	-
Absolute accuracy		-	±3.0	±8.0	LSB	High-precision channel
				±12.0	LSB	Other than above
DNL differential nonlinearity error		-	±1.0	-	LSB	-
INL integral nonlinearity error		-	±1.0	±3.0	LSB	-
14-bit mode						
Resolution		-	-	14	Bit	-

Table 2.53 A/D conversion characteristics (6) in low power mode (2/2)

Conditions: VCC = AVCC0 = 1.8 to 5.5 V (AVCC0 = VCC when VCC < 2.0 V), VREFH0 = 1.8 to 5.5 V, VSS = AVSS0 = VREFL0 = 0 V
Reference voltage range applied to the VREFH0 and VREFL0.

Item		Min	Typ	Max	Unit	Test conditions
Conversion time*1 (Operation at PCLKC = 8 MHz)	Permissible signal source impedance Max. = 5 kΩ	7.50	-	-	μs	High-precision channel ADCSR.ADHSC = 1 ADSSTRn.SST[7:0] = 0Dh
		10.88	-	-	μs	Normal-precision channel ADCSR.ADHSC = 1 ADSSTRn.SST[7:0] = 28h
Offset error		-	±4.0	±30.0	LSB	High-precision channel
				±40.0	LSB	Other than above
Full-scale error		-	±6.0	±30.0	LSB	High-precision channel
				±40.0	LSB	Other than above
Quantization error		-	±0.5	-	LSB	-
Absolute accuracy		-	±12.0	±32.0	LSB	High-precision channel
				±48.0	LSB	Other than above
DNL differential nonlinearity error		-	±4.0	-	LSB	-
INL integral nonlinearity error		-	±4.0	±12.0	LSB	-

Note: The characteristics apply when no pin functions other than 14-bit A/D converter input are used. Absolute accuracy does not include quantization errors. Offset error, full-scale error, DNL differential nonlinearity error, and INL integral nonlinearity error do not include quantization errors.

Note 1. The conversion time is the sum of the sampling time and the comparison time. The number of sampling states is indicated for the test conditions.

Table 2.54 A/D conversion characteristics (7) in low power mode (1/2)

Conditions: VCC = AVCC0 = 1.6 to 5.5 V (AVCC0 = VCC when VCC < 2.0 V), VREFH0 = 1.6 to 5.5 V, VSS = AVSS0 = VREFL0 = 0
Reference voltage range applied to the VREFH0 and VREFL0.

Item		Min	Typ	Max	Unit	Test conditions
Frequency		1	-	4	MHz	-
Analog input capacitance	Cs	-	-	15	pF	High-precision channel
		-	-	30	pF	Normal-precision channel
Analog input resistance	Rs	-	-	2.5	kΩ	-
Analog input voltage range	Ain	0	-	VREFH0	V	-
12-bit mode						
Resolution		-	-	12	Bit	-
Conversion time*1 (Operation at PCLKC = 4 MHz)	Permissible signal source impedance Max. = 9.9 kΩ	13.5	-	-	μs	High-precision channel ADCSR.ADHSC = 1 ADSSTRn.SST[7:0] = 0Dh
		20.25	-	-	μs	Normal-precision channel ADCSR.ADHSC = 1 ADSSTRn.SST[7:0] = 28h
Offset error		-	±1.0	±7.5	LSB	High-precision channel
				±10.0	LSB	Other than above
Full-scale error		-	±1.5	±7.5	LSB	High-precision channel
				±10.0	LSB	Other than above
Quantization error		-	±0.5	-	LSB	-
Absolute accuracy		-	±3.0	±8.0	LSB	High-precision channel
				±12.0	LSB	Other than above
DNL differential nonlinearity error		-	±1.0	-	LSB	-
INL integral nonlinearity error		-	±1.0	±3.0	LSB	-
14-bit mode						
Resolution		-	-	14	Bit	-

Table 2.54 A/D conversion characteristics (7) in low power mode (2/2)

Conditions: VCC = AVCC0 = 1.6 to 5.5 V (AVCC0 = VCC when VCC < 2.0 V), VREFH0 = 1.6 to 5.5 V, VSS = AVSS0 = VREFL0 = 0
Reference voltage range applied to the VREFH0 and VREFL0.

Item		Min	Typ	Max	Unit	Test conditions
Conversion time*1 (Operation at PCLKC = 4 MHz)	Permissible signal source impedance Max. = 9.9 kΩ	15.0	-	-	μs	High-precision channel ADCSR.ADHSC = 1 ADSSTRn.SST[7:0] = 0Dh
		21.75	-	-	μs	Normal-precision channel ADCSR.ADHSC = 1 ADSSTRn.SST[7:0] = 28h
Offset error		-	±4.0	±30.0	LSB	High-precision channel
				±40.0	LSB	Other than above
Full-scale error		-	±6.0	±30.0	LSB	High-precision channel
				±40.0	LSB	Other than above
Quantization error		-	±0.5	-	LSB	-
Absolute accuracy		-	±12.0	±32.0	LSB	High-precision channel
				±48.0	LSB	Other than above
DNL differential nonlinearity error		-	±4.0	-	LSB	-
INL integral nonlinearity error		-	±4.0	±12.0	LSB	-

Note: The characteristics apply when no pin functions other than 14-bit A/D converter input are used. Absolute accuracy does not include quantization errors. Offset error, full-scale error, DNL differential nonlinearity error, and INL integral nonlinearity error do not include quantization errors.

Note 1. The conversion time is the sum of the sampling time and the comparison time. The number of sampling states is indicated for the test conditions.

Table 2.55 14-Bit A/D converter channel classification

Classification	Channel	Conditions	Remarks
High-precision channel	AN000 to AN015	AVCC0 = 1.6 to 5.5 V	Pins AN000 to AN015 cannot be used as general I/O, IRQ8, IRQ9 inputs, and TS transmission, when the A/D converter is in use
Normal-precision channel	AN016 to AN027		
Internal reference voltage input channel	Internal reference voltage	AVCC0 = 2.0 to 5.5 V	-
Temperature sensor input channel	Temperature sensor output	AVCC0 = 2.0 to 5.5 V	-

Table 2.56 A/D internal reference voltage characteristics

Conditions: VCC = AVCC0 = VREFH0 = 2.0 to 5.5 V*1

Item	Min	Typ	Max	Unit	Test conditions
Internal reference voltage input channel*2	1.36	1.43	1.50	V	-

Note 1. The internal reference voltage cannot be selected for input channels when AVCC0 < 2.0 V.

Note 2. The 14-bit A/D internal reference voltage indicates the voltage when the internal reference voltage is input to the 14-bit A/D converter.

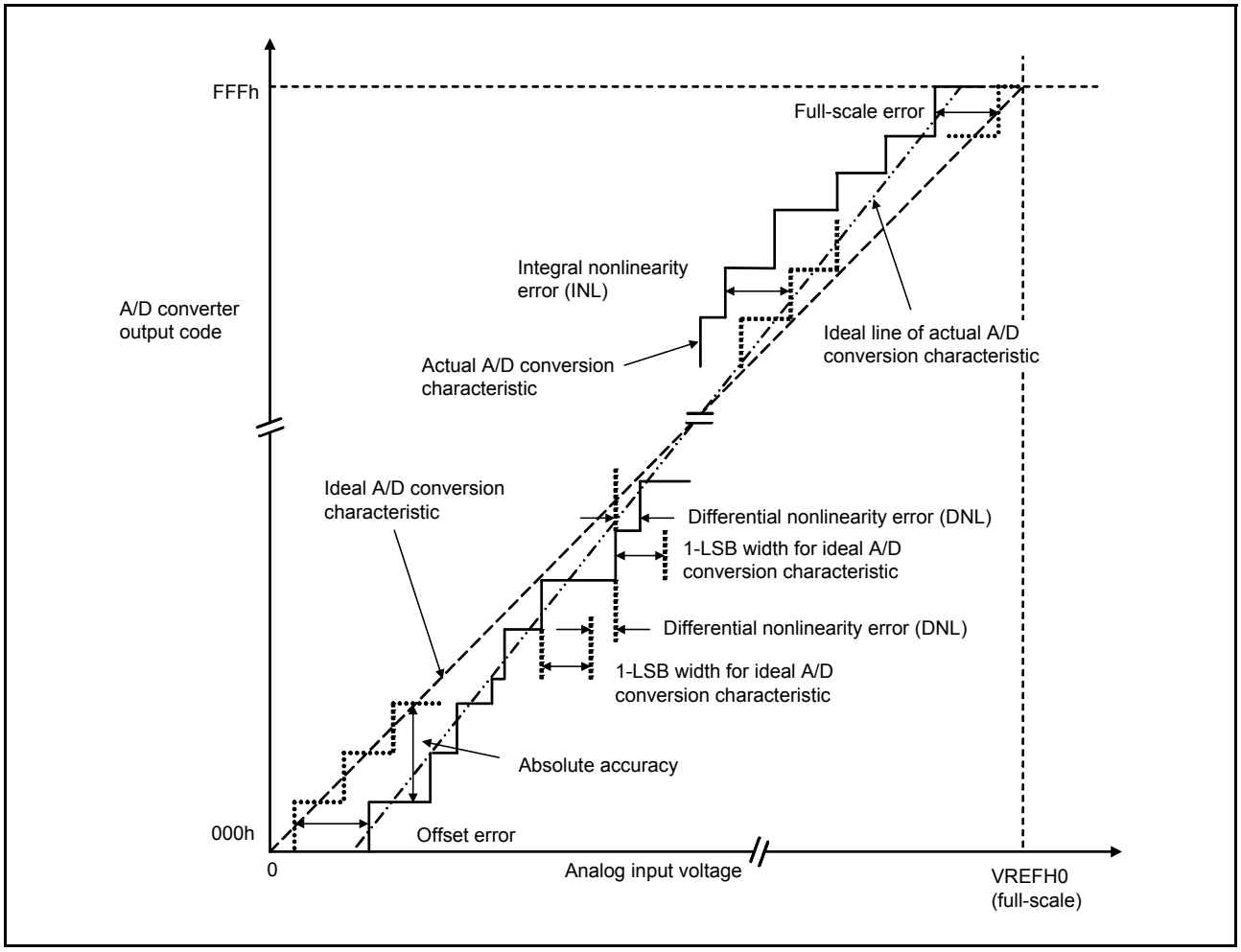

Figure 2.77 Illustration of 14-bit A/D converter characteristic terms

Absolute accuracy

Absolute accuracy is the difference between output code based on the theoretical A/D conversion characteristics, and the actual A/D conversion result. When measuring absolute accuracy, the voltage at the midpoint of the width of analog input voltage (1-LSB width), which can meet the expectation of outputting an equal code based on the theoretical A/D conversion characteristics, is used as the analog input voltage. For example, if 12-bit resolution is used and the reference voltage VREFH0 = 3.072 V, then 1-LSB width becomes 0.75 mV, and 0 mV, 0.75 mV, 1.5 mV are used as the analog input voltages. If analog input voltage is 6 mV, an absolute accuracy of ±5 LSB means that the actual A/D conversion result is in the range of 003h to 00Dh, though an output code of 008h can be expected from the theoretical A/D conversion characteristics.

Integral nonlinearity error (INL)

Integral nonlinearity error is the maximum deviation between the ideal line when the measured offset and full-scale errors are zeroed, and the actual output code.

Differential nonlinearity error (DNL)

Differential nonlinearity error is the difference between 1-LSB width based on the ideal A/D conversion characteristics and the width of the actually output code.

Offset error

Offset error is the difference between the transition point of the ideal first output code and the actual first output code.

Full-scale error

Full-scale error is the difference between the transition point of the ideal last output code and the actual last output code.

2.6 DAC12 Characteristics

Table 2.57 D/A conversion characteristics (1)
Conditions: VCC = AVCC0 = VREFH0 = 1.8 to 5.5 V
Reference voltage = VREFH or VREFL selected

Item	Min	Typ	Max	Unit	Test conditions
Resolution	-	-	12	bit	-
Resistive load	30	-	-	kΩ	-
Capacitive load	-	-	50	pF	-
Output voltage range	0.35	-	AVCC0 – 0.47	V	
DNL differential nonlinearity error	-	±0.5	±1.0	LSB	-
INL integral nonlinearity error	-	±2.0	±8.0	LSB	-
Offset error	-	-	±20	mV	-
Full-scale error	-	-	±20	mV	-
Output impedance	-	5	-	Ω	-
Conversion time	-	-	30	μs	-

Table 2.58 D/A conversion characteristics (2)
Conditions: VCC = AVCC0 = 1.8 to 5.5 V
Reference voltage = AVCC0 or AVSS0 selected

Item	Min	Typ	Max	Unit	Test conditions
Resolution	-	-	12	bit	-
Resistive load	30	-	-	kΩ	-
Capacitive load	-	-	50	pF	-
Output voltage range	0.35	-	AVCC0 – 0.47	V	-
DNL differential nonlinearity error	-	±0.5	±2.0	LSB	-
INL integral nonlinearity error	-	±2.0	±8.0	LSB	-
Offset error	-	-	±30	mV	-
Full-scale error	-	-	±30	mV	-
Output impedance	-	5	-	Ω	-
Conversion time	-	-	30	μs	-

Table 2.59 D/A conversioncharacteristics (3)
Conditions: VCC = AVCC0 = 1.8 to 5.5 V
Reference voltage = internal reference voltage selected

Item	Min	Typ	Max	Unit	Test conditions
Resolution	-	-	12	bit	-
Internal reference voltage (Vbgr)	1.36	1.43	1.50	V	-
Resistive load	30	-	-	kΩ	-
Capacitive load	-	-	50	pF	-
Output voltage range	0.35	-	Vbgr	V	-
DNL differential nonlinearity error	-	±2.0	±16.0	LSB	-
INL integral nonlinearity error	-	±8.0	±16.0	LSB	-
Offset error	-	-	±30	mV	-
Output impedance	-	5	-	Ω	-
Conversion time	-	-	30	μs	-

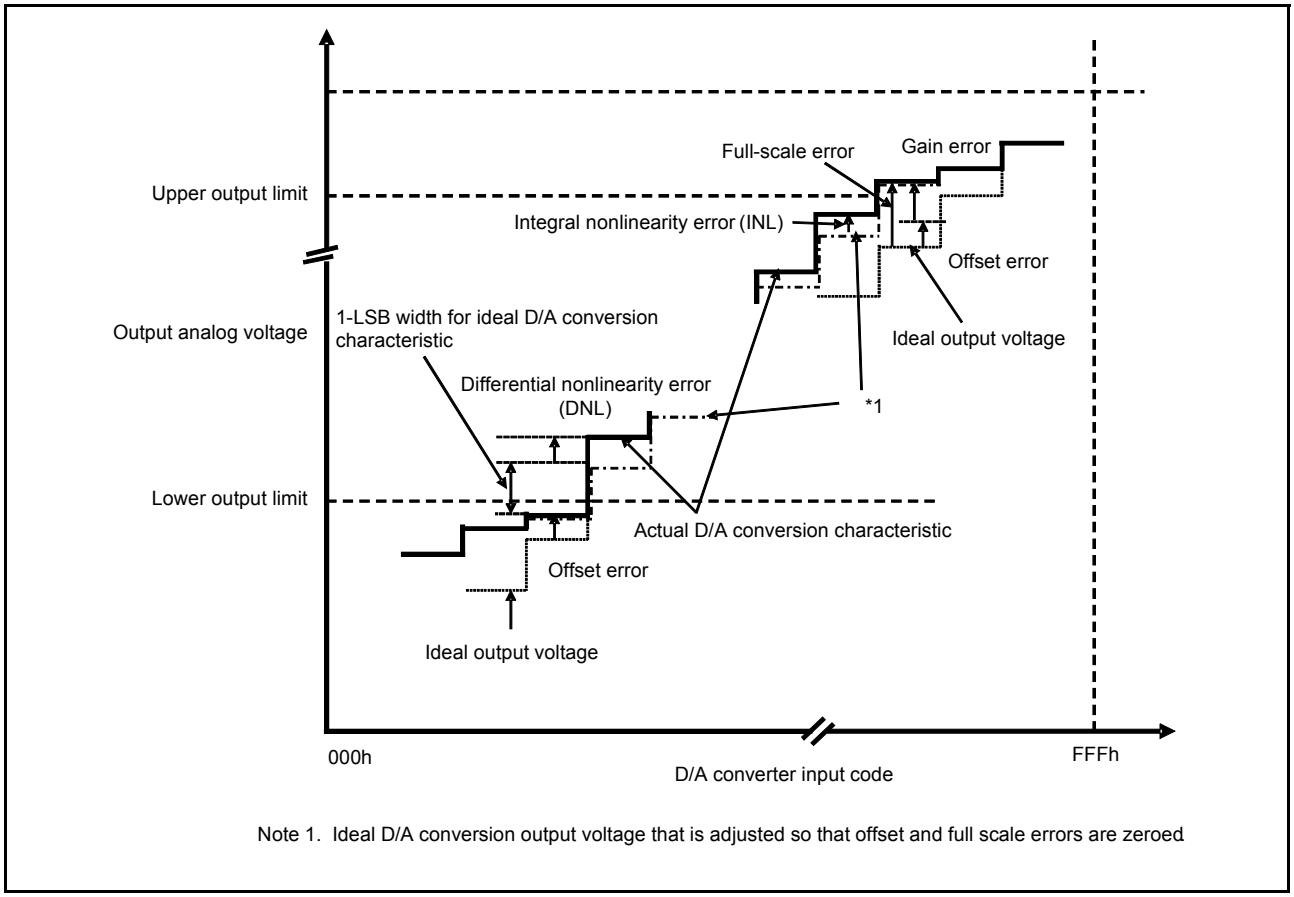

Figure 2.78 Illustration of D/A converter characteristic terms

Integral nonlinearity error (INL)

Integral nonlinearity error is the maximum deviation between the ideal output voltage based on the ideal conversion characteristic when the measured offset and full-scale errors are zeroed, and the actual output voltage.

Differential nonlinearity error (DNL)

Differential nonlinearity error is the difference between 1-LSB voltage width based on the ideal D/A conversion characteristics and the width of the actual output voltage.

Offset error

Offset error is the difference between the highest actual output voltage that falls below the lower output limit and the ideal output voltage based on the input code.

Full-scale error

Full-scale error is the difference between the lowest actual output voltage that exceeds the upper output limit and the ideal output voltage based on the input code.

2.7 TSN Characteristics

Table 2.60 TSN characteristics
Conditions: VCC = AVCC0 = 2.0 to 5.5 V

Item	Symbol	Min	Typ	Max	Unit	Test conditions
Relative accuracy	-	-	±1.5	-	°C	2.4 V or above
	-	-	±2.0	-	°C	Below 2.4 V
Temperature slope	-	-	–3.65	-	mV/°C	-
Output voltage (at 25°C)	-	-	1.05	-	V	VCC = 3.3 V
Temperature sensor start time	t_{START}	-	-	5	μs	-
Sampling time	-	5	-	-	μs	-

2.8 OSC Stop Detect Characteristics

Table 2.61 Oscillation stop detection circuit characteristics

Item	Symbol	Min	Typ	Max	Unit	Test conditions
Detection time	t_{dr}	-	-	1	ms	Figure 2.79

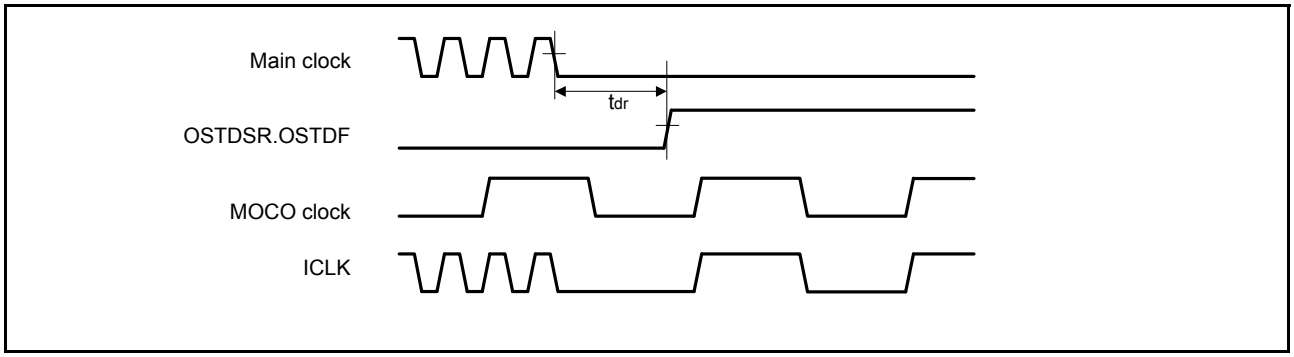

Figure 2.79 Oscillation stop detection timing

2.9 POR and LVD Characteristics

Table 2.62 Power-on reset circuit and voltage detection circuit characteristics (1)
Conditions: VCC = AVCC0 = VCC_USB

Item		Symbol	Min	Typ	Max	Unit	Test conditions
Voltage detection level*1	Power-on reset (POR)	V_{POR}	1.27	1.42	1.57	V	Figure 2.80, Figure 2.81
	Voltage detection circuit (LVD0)*2	V_{det0_0}	3.68	3.85	4.00	V	Figure 2.82 At falling edge VCC
		V_{det0_1}	2.68	2.85	2.96		
		V_{det0_2}	2.38	2.53	2.64		
		V_{det0_3}	1.78	1.90	2.02		
		V_{det0_4}	1.60	1.69	1.82		
	Voltage detection circuit (LVD1)*3	V_{det1_0}	4.13	4.29	4.45	V	Figure 2.83 At falling edge VCC
		V_{det1_1}	3.98	4.16	4.30		
		V_{det1_2}	3.86	4.03	4.18		
		V_{det1_3}	3.68	3.86	4.00		
		V_{det1_4}	2.98	3.10	3.22		
		V_{det1_5}	2.89	3.00	3.11		
		V_{det1_6}	2.79	2.90	3.01		
		V_{det1_7}	2.68	2.79	2.90		
		V_{det1_8}	2.58	2.68	2.78		
		V_{det1_9}	2.48	2.58	2.68		
		V_{det1_A}	2.38	2.48	2.58		
		V_{det1_B}	2.10	2.20	2.30		
		V_{det1_C}	1.84	1.96	2.05		
		V_{det1_D}	1.74	1.86	1.95		
		V_{det1_E}	1.63	1.75	1.84		
		V_{det1_F}	1.60	1.65	1.73		
	Voltage detection circuit (LVD2)*4	V_{det2_0}	4.11	4.31	4.48	V	Figure 2.84 At falling edge VCC
		V_{det2_1}	3.97	4.17	4.34		
		V_{det2_2}	3.83	4.03	4.20		
		V_{det2_3}	3.64	3.84	4.01		

Note 1. These characteristics apply when noise is not superimposed on the power supply. When a setting causes this voltage detection level to overlap with that of the voltage detection circuit (LVD2), it cannot be specified whether LVD1 or LVD2 is used for voltage detection.
Note 2. # in the symbol Vdet0_# denotes the value of the OFS1.VDSEL1[2:0] bits.
Note 3. # in the symbol Vdet1_# denotes the value of the LVDLVLR.LVD1LVL[4:0] bits.
Note 4. # in the symbol Vdet2_# denotes the value of the LVDLVLR.LVD2LVL[2:0] bits.

Table 2.63 Power-on reset circuit and voltage detection circuit characteristics (2)

Conditions: VCC = AVCC0 = VCC_USB

Item		Symbol	Min	Typ	Max	Unit	Test conditions
Wait time after voltage monitoring 0,1,2 reset cancellation	LVD0:enable*1	$t_{LVD0,1,2}$	-	0.6	-	μs	-
	LVD0:disable*2	$t_{LVD1,2}$	-	0.2	-	μs	-
Response delay*3		t_{det}	-	-	350	μs	Figure 2.80, Figure 2.81
Minimum VCC down time		t_{VOFF}	450	-	-	μs	Figure 2.80, VCC = 1.0 V or above
Power-on reset enable time		$t_{W (POR)}$	1	-	-	ms	Figure 2.81, VCC = below 1.0 V
LVD operation stabilization time (after LVD is enabled)		$T_{d (E-A)}$	-	-	300	μs	Figure 2.83, Figure 2.84
Hysteresis width (POR)		V_{PORH}	-	110	-	mV	-
Hysteresis width (LVD1 and LVD2)		V_{LVH}	-	70	-	mV	V_{det1_0} to V_{det1_4} selected.
			-	60	-		V_{det1_5} to V_{det1_9} selected.
			-	50	-		V_{det1_A} or V_{det1_B} selected.
			-	40	-		V_{det1_C} or V_{det1_D} selected.
			-	60	-		LVD2 selected

Note 1. When OFS1.LVDAS = 0.
Note 2. When OFS1.LVDAS = 1.
Note 3. The minimum VCC down time indicates the time when VCC is below the minimum value of voltage detection levels V_{POR}, Vdet0, Vdet1, and Vdet2 for the POR/LVD.

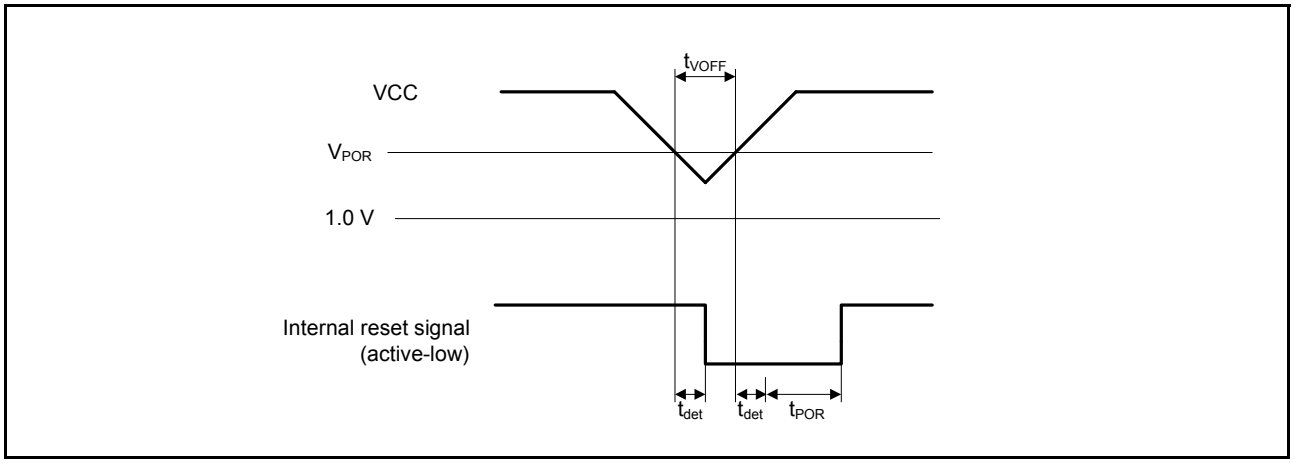

Figure 2.80 Voltage detection reset timing

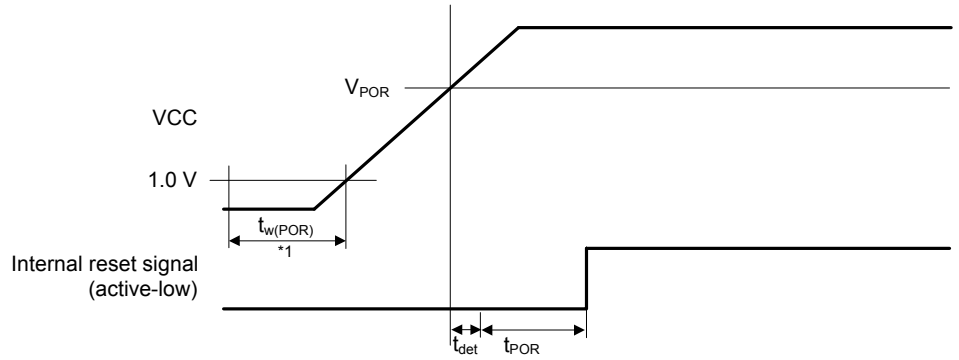

Note: $t_{w(por)}$ is the time required for a power-on reset to be enabled while the external power VCC is being held below the valid voltage (1.0 V).
When VCC turns on, maintain $t_{w(por)}$ for 1.0 ms or more.

Figure 2.81 Power-on reset timing

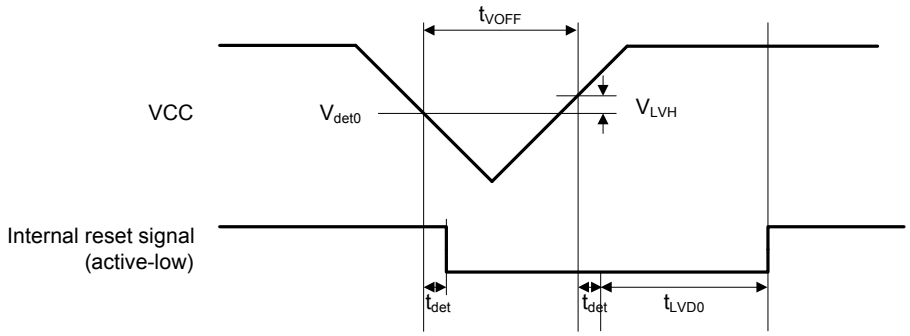

Figure 2.82 Voltage detection circuit timing (V_{det0})

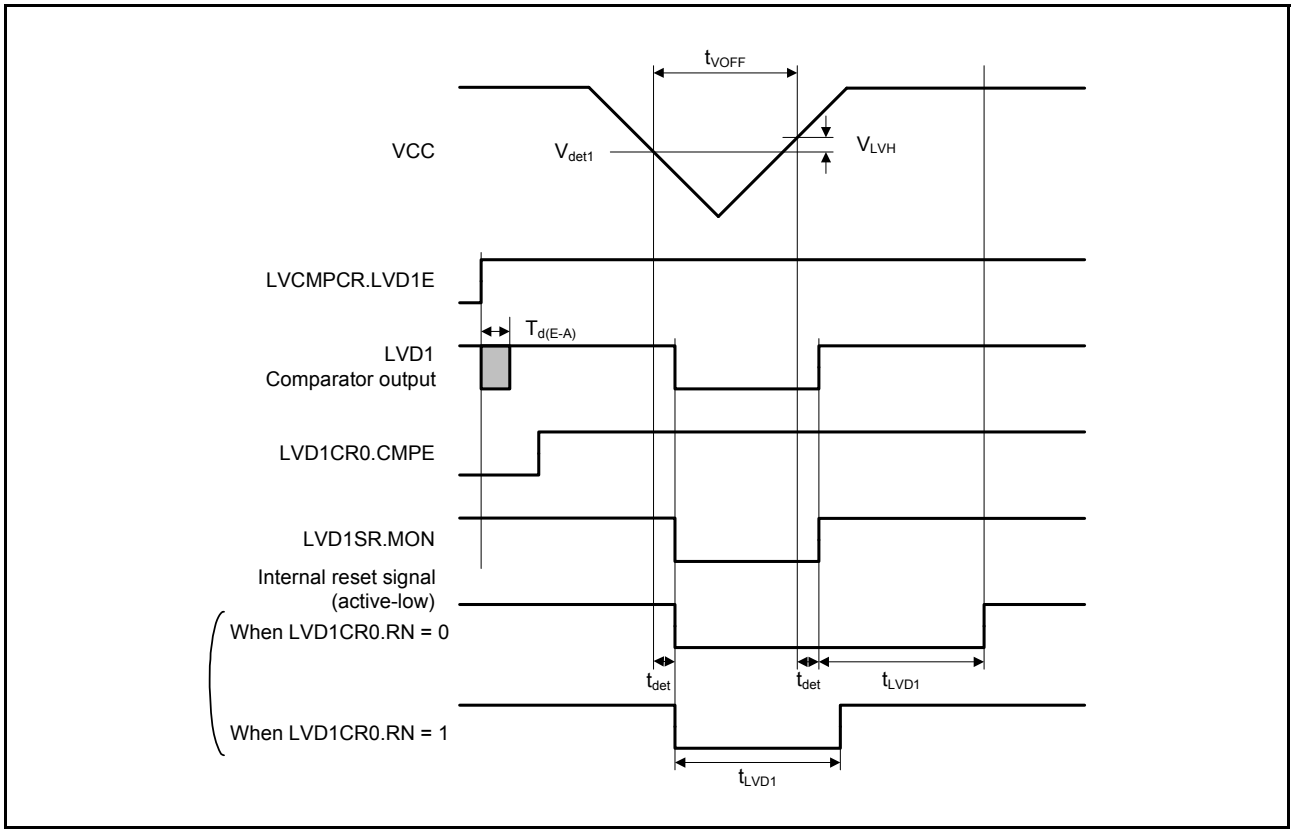

Figure 2.83 Voltage detection circuit timing (V_{det1})

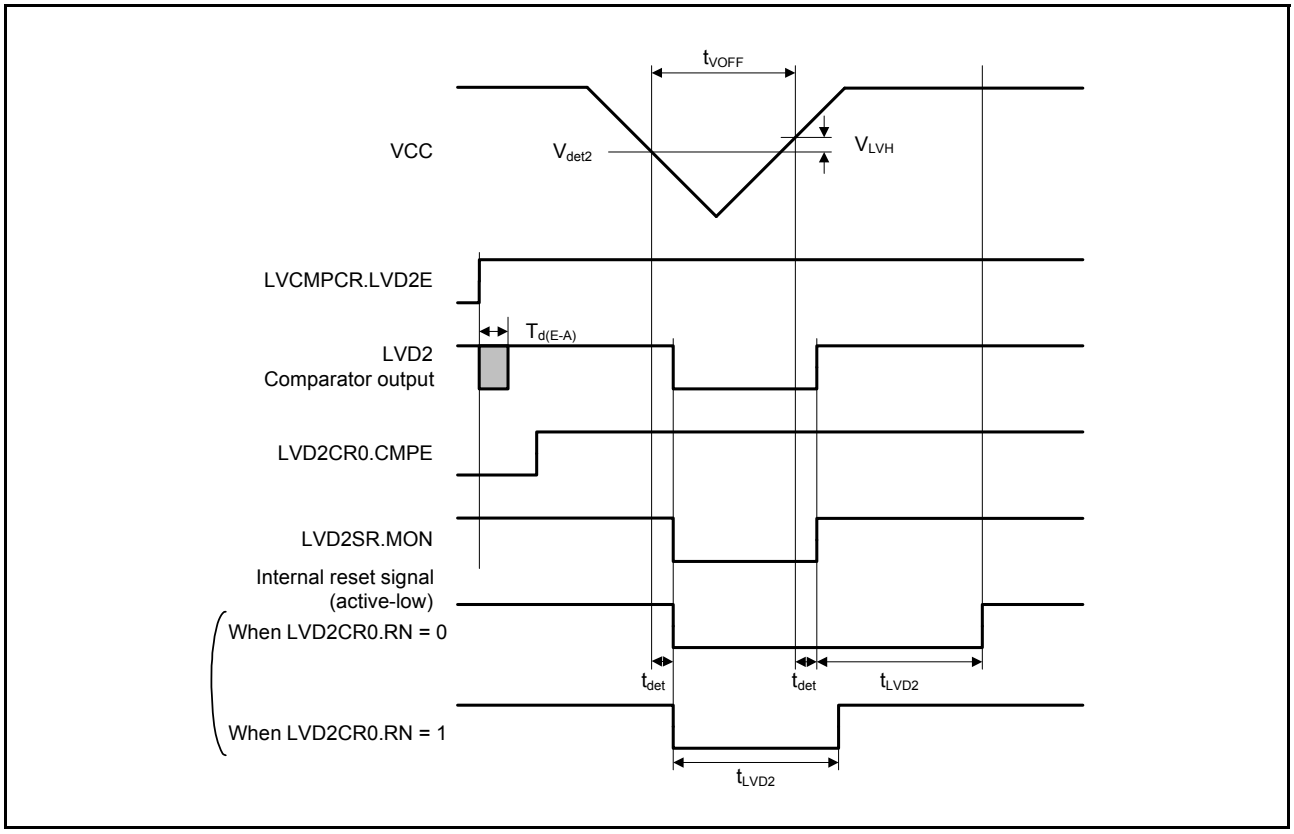

Figure 2.84 Voltage detection circuit timing (V_{det2})

2.10 Battery Backup Function Characteristics

Table 2.64 Battery Backup Function Characteristics

Conditions: VCC = AVCC0 = 1.6V to 5.5V, VBATT = 1.6 to 3.6 V, VSS = AVSS0 = 0V

Item		Symbol	Min	Typ	Max	Unit	Test conditions
Voltage level for switching to battery backup (falling)		$V_{DETBATT}$	1.99	2.09	2.19	V	Figure 2.85, Figure 2.86
Hysteresis width for switching to battery back up		V_{VBATTH}	-	100	-	mV	
VCC-off period for starting power supply switching		$t_{VOFFBATT}$	300	-	-	μs	-
Voltage detection level VBATT_Power-on reset (VBATT_POR)		$V_{VBATPOR}$	1.30	1.40	1.50	V	Figure 2.85, Figure 2.86
Wait time after VBATT_POR reset time cancellation		$t_{VBATPOR}$	-	-	3	mS	-
Level for detection of voltage drop on the VBATT pin (falling)	VBTLVDLVL[1:0] = 10b	$V_{DETBATLVD}$	2.11	2.2	2.29	V	Figure 2.87
	VBTLVDLVL[1:0] = 11b		1.92	2	2.08	V	
Hysteresis width for VBATT pin LVD		$V_{VBATLVDTH}$	-	50	-	mV	
VBATT pin LVD operation stabilization time		t_{d_vbat}	-	-	300	μs	Figure 2.87
VBATT pin LVD response delay time		t_{det_vbat}	-	-	350	μs	
Allowable voltage change rising/falling gradient		dt/dVCC	1.0	-	-	ms/V	-
VCC voltage level for access to the VBATT backup registers		$V_{_BKBATT}$	1.8	-	-	V	-

Note: The VCC-off period for starting power supply switching indicates the period in which VCC is below the minimum value of the voltage level for switching to battery backup ($V_{DETBATT}$).

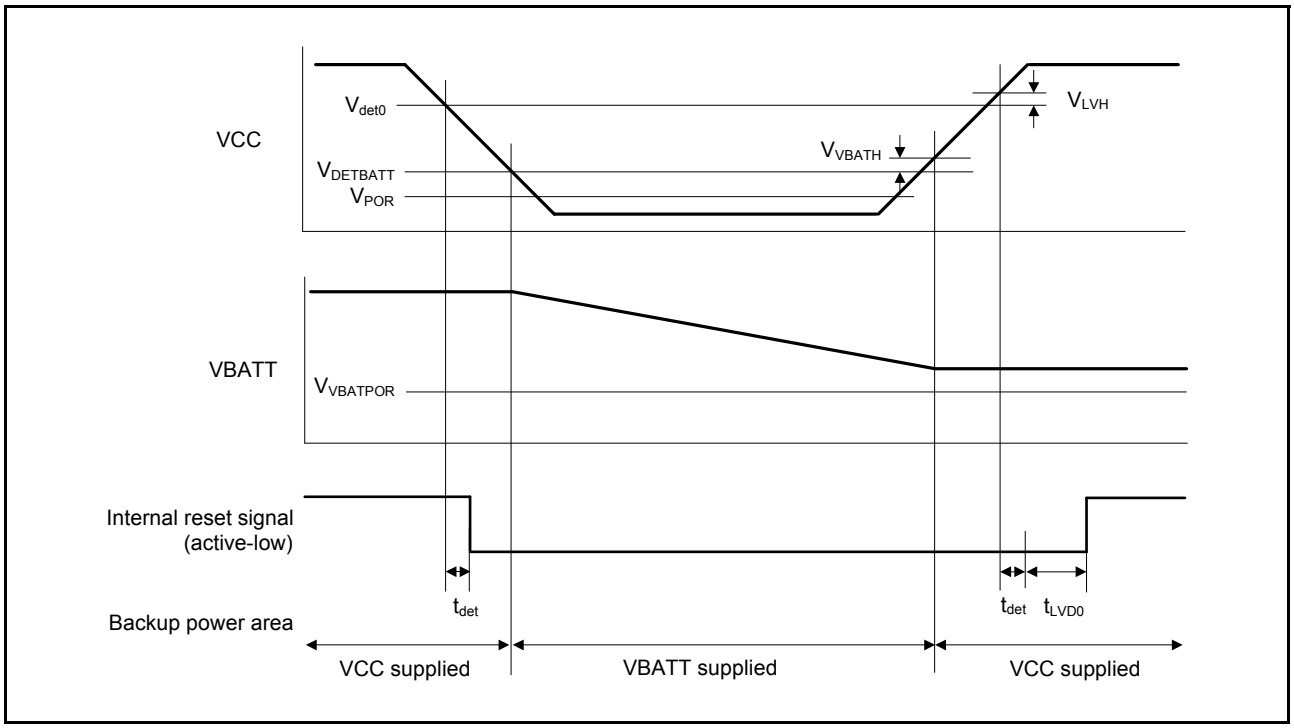

Figure 2.85 Power supply switching and LVD0 reset Timing

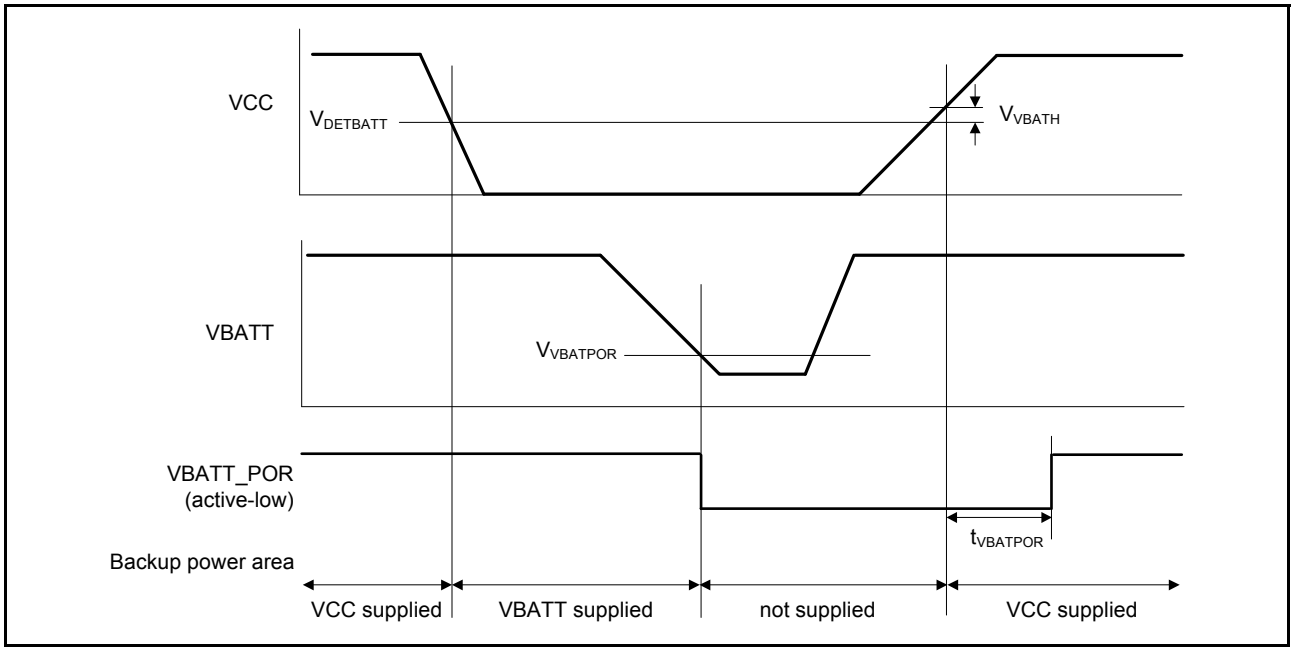

Figure 2.86 VBATT_POR Reset Timing

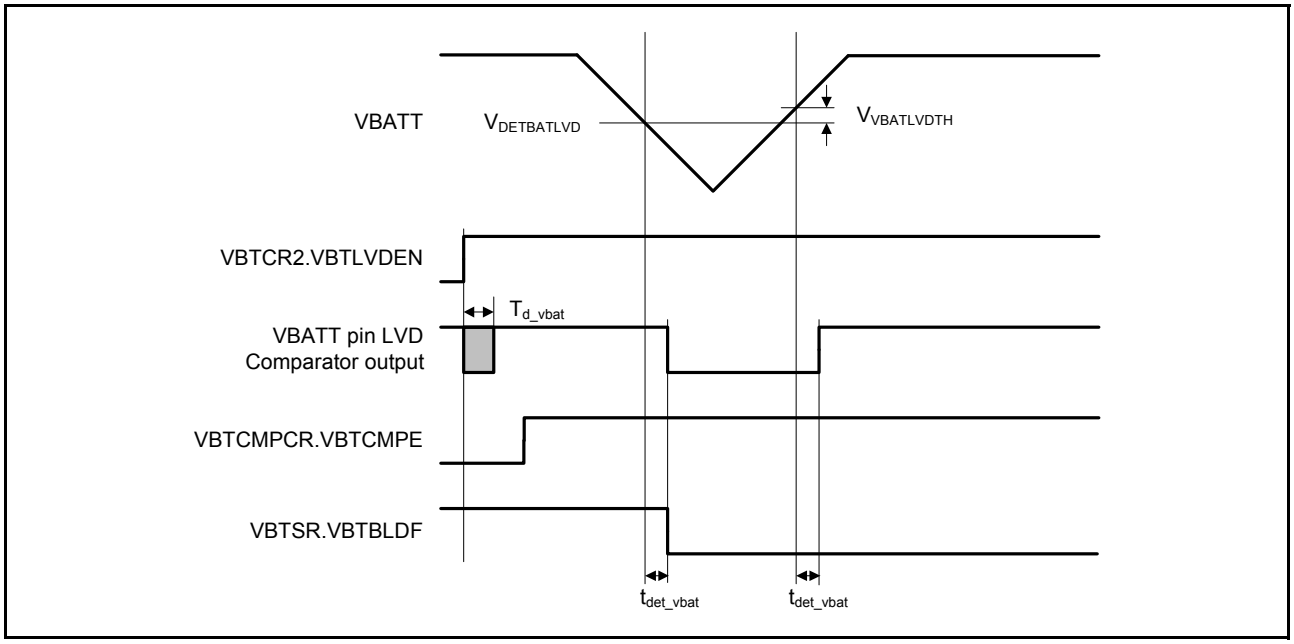

Figure 2.87 VBATT pin Voltage Detection Circuit Timing

2.11 CTSU Characteristics

Table 2.65 CTSU characteristics

Conditions: VCC = AVCC0 = 1.8 to 5.5 V

Item	Symbol	Min	Typ	Max	Unit	Test conditions
External capacitance connected to TSCAP pin	C_{tscap}	9	10	11	nF	-
TS pin capacitive load	C_{base}	-	-	50	pF	-
Permissible output high current	ΣIoH	-	-	-24	mA	When the mutual capacitance method is applied

2.12 Segment LCD Controller/Driver Characteristics

2.12.1 Resistance Division Method

[Static Display Mode]

Table 2.66 Resistance division method LCD characteristics (1)
Conditions: VL4 ≤ VCC ≤ 5.5 V

Item	Symbol	Min	Typ	Max	Unit	Test conditions
LCD drive voltage	V_{L4}	2.0	-	VCC	V	-

[1/2 Bias Method, 1/4 Bias Method]

Table 2.67 Resistance division method LCD characteristics (2)
Conditions: VL4 ≤ VCC ≤ 5.5 V

Item	Symbol	Min	Typ	Max	Unit	Test conditions
LCD drive voltage	V_{L4}	2.7	-	VCC	V	-

[1/3 Bias Method]

Table 2.68 Resistance division method LCD characteristics (3)
Conditions: VL4 ≤ VCC ≤ 5.5 V

Item	Symbol	Min	Typ	Max	Unit	Test conditions
LCD drive voltage	V_{L4}	2.5	-	VCC	V	-

2.12.2 Internal Voltage Boosting Method

[1/3 Bias Method]

Table 2.69 Internal voltage boosting method LCD characteristics
Conditions: VCC = AVCC0 = 1.8 V to 5.5 V

Item	Symbol	Conditions		Min	Typ	Max	Unit	Test conditions
LCD output voltage variation range	V_{L1}	C1 to C4*1 = 0.47 μF	VLCD = 04h	0.90	1.0	1.08	V	-
			VLCD = 05h	0.95	1.05	1.13	V	-
			VLCD = 06h	1.00	1.10	1.18	V	-
			VLCD = 07h	1.05	1.15	1.23	V	-
			VLCD = 08h	1.10	1.20	1.28	V	-
			VLCD = 09h	1.15	1.25	1.33	V	-
			VLCD = 0Ah	1.20	1.30	1.38	V	-
			VLCD = 0Bh	1.25	1.35	1.43	V	-
			VLCD = 0Ch	1.30	1.40	1.48	V	-
			VLCD = 0Dh	1.35	1.45	1.53	V	-
			VLCD = 0Eh	1.40	1.50	1.58	V	-
			VLCD = 0Fh	1.45	1.55	1.63	V	-
			VLCD = 10h	1.50	1.60	1.68	V	-
			VLCD = 11h	1.55	1.65	1.73	V	-
			VLCD = 12h	1.60	1.70	1.78	V	-
			VLCD = 13h	1.65	1.75	1.83	V	-
Doubler output voltage	V_{L2}	C1 to C4*1 = 0.47 μF		$2 \times V_{L1} - 0.1$	$2 \times V_{L1}$	$2 \times V_{L1}$	V	-
Tripler output voltage	V_{L4}	C1 to C4*1 = 0.47 μF		$3 \times V_{L1} - 0.15$	$3 \times V_{L1}$	$3 \times V_{L1}$	V	-
Reference voltage setup time*2	t_{VL1S}			5	-	-	ms	Figure 2.88
LCD output voltage variation range*3	t_{VLWT}	C1 to C4*1 = 0.47 μF		500	-	-	ms	

Note 1. This is a capacitor that is connected between voltage pins used to drive the LCD.

C1: A capacitor connected between CAPH and CAPL
C2: A capacitor connected between VL1 and GND
C3: A capacitor connected between VL2 and GND
C4: A capacitor connected between VL4 and GND
C1 = C2 = C3 = C4 = 0.47 μF ±30%

Note 2. This is the time required to wait from when the reference voltage is specified using the VLCD register (or when the internal voltage boosting method is selected (by setting the MDSET[1:0] bits in the LCDM0 register to 01b) if the default value reference voltage is used) until voltage boosting starts (VLCON = 1).

Note 3. This is the wait time from when voltage boosting is started (VLCON = 1) until display is enabled (LCDON = 1).

[1/4 Bias Method]

Table 2.70 Internal voltage boosting method LCD characteristics

Conditions: VCC = AVCC0 = 1.8 V to 5.5 V

Item	Symbol	Conditions		Min	Typ	Max	Unit	Test conditions
LCD output voltage variation range	V_{L1}	C1 to C5*1 = 0.47 μF	VLCD = 04h	0.90	1.0	1.08	V	-
			VLCD = 05h	0.95	1.05	1.13	V	-
			VLCD = 06h	1.00	1.10	1.18	V	-
			VLCD = 07h	1.05	1.15	1.23	V	-
			VLCD = 08h	1.10	1.20	1.28	V	-
			VLCD = 09h	1.15	1.25	1.33	V	-
			VLCD = 0Ah	1.20	1.30	1.38	V	-
			VLCD = 0Bh	1.25	1.35	1.43	V	-
			VLCD = 0Ch	1.30	1.40	1.48	V	-
Doubler output voltage	V_{L2}	C1 to C5*1 = 0.47 μF		$2V_{L1}$ - 0.08	$2V_{L1}$	$2V_{L1}$	V	-
Tripler output voltage	V_{L3}	C1 to C5*1 = 0.47 μF		$3V_{L1}$ - 0.12	$3V_{L1}$	$3V_{L1}$	V	-
Quadruply output voltage	V_{L4}*4	C1 to C5*1 = 0.47 μF		$4V_{L1}$ - 0.16	$4V_{L1}$	$4V_{L1}$	V	-
Reference voltage setup time*2	t_{VL1S}			5	-	-	ms	Figure 2.88
LCD output voltage variation range*3	t_{VLWT}	C1 to C5*1 = 0.47 μF		500	-	-	ms	

Note 1. This is a capacitor that is connected between voltage pins used to drive the LCD.
C1: A capacitor connected between CAPH and CAPL
C2: A capacitor connected between VL1 and GND
C3: A capacitor connected between VL2 and GND
C4: A capacitor connected between VL3 and GND
C5: A capacitor connected between VL4 and GND
C1 = C2 = C3 = C4 = C5 = 0.47 μF ± 30%

Note 2. This is the time required to wait from when the reference voltage is specified by using the VLCD register (or when the internal voltage boosting method is selected (by setting the MDSET1 and MDSET0 bits in the LCDM0 register to 01b) if the default value reference voltage is used) until voltage boosting starts (VLCON = 1).

Note 3. This is the wait time from when voltage boosting is started (VLCON = 1) until display is enabled (LCDON = 1).

Note 4. V_{L4} must be 5.5 V or lower.

2.12.3 Capacitor Split Method

[1/3 Bias Method]

Table 2.71 Internal voltage boostingmethod LCD characteristics

Conditions: VCC = AVCC0 = 2.2 V to 5.5 V

Item	Symbol	Conditions	Min	Typ	Max	Unit	Test conditions
VL4 voltage*1	V_{L4}	C1 to C4 = 0.47 μF*2	-	VCC	-	V	-
VL2 voltage*1	V_{L2}	C1 to C4 = 0.47 μF*2	2/3 × V_{L4} - 0.07	2/3 × V_{L4}	2/3 × V_{L4} + 0.07	V	-
VL1 voltage*1	V_{L1}	C1 to C4 = 0.47 μF*2	1/3 × V_{L4} - 0.08	1/3 × V_{L4}	1/3 × V_{L4} + 0.08	V	-
Capacitor split wait time*1	t_{WAIT}		100	-	-	ms	Figure 2.88

Note 1. This is the wait time from when voltage bucking is started (VLCON = 1) until display is enabled (LCDON = 1).
Note 2. This is a capacitor that is connected between voltage pins used to drive the LCD.
C1: A capacitor connected between CAPH and CAPL
C2: A capacitor connected between VL1 and GND
C3: A capacitor connected between VL2 and GND
C4: A capacitor connected between VL4 and GND
C1 = C2 = C3 = C4 = 0.47 μF ± 30%

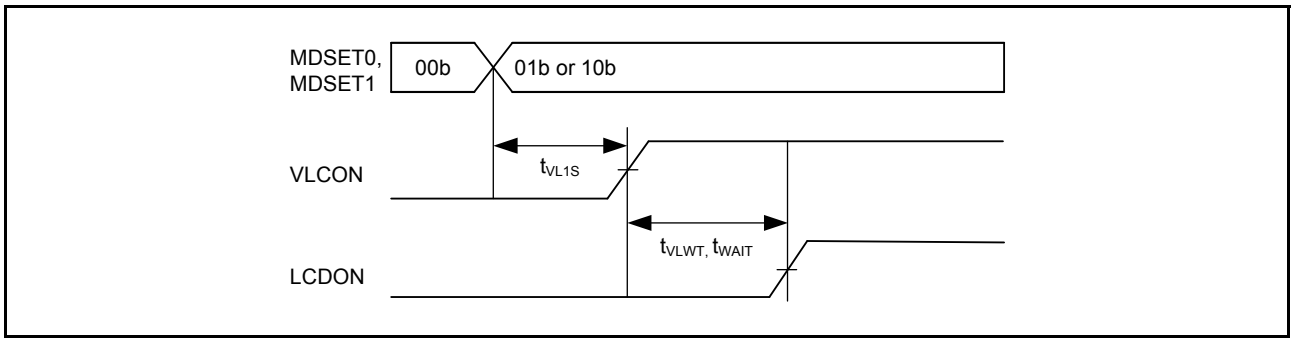

Figure 2.88 LCD reference voltage setup time, voltage boosting wait time, and capacitor split wait time

2.13 Comparator Characteristics

Table 2.72 ACMPHS characteristics

Conditions: VCC = AVCC0 = 2.7 to 5.5 V, VSS = AVSS0 = 0 V

Item	Symbol	Min	Typ	Max	Unit	Test conditions
Input offset voltage	V_{IOCMP}	-	±5	±40	mV	-
Input voltage range	V_{ICMP}	0	-	AVCC0	V	-
Input signal cycle	t_{PCMP}	10	-	-	μs	-
Output delay time	t_d	-	50	100	ns	Input amplitude ± 100 mV
Stabilization wait time during input channel switching*1	t_{WAIT}	300	-	-	ns	Input amplitude ± 100 mV
Operation stabilization wait time*2	t_{CMP}	1	-	-	μs	3.3 V ≤ AVCC0 ≤ 5.5 V
		3	-	-	μs	2.7 V ≤ AVCC0 < 3.3 V

Note 1. Period of time from when the comparator input channel is switched until the comparator is switched to output.
Note 2. Period of time from when the comparator operation is enabled (CMPCTL.HCMPON = 1) until the comparator satisfies the DC/AC characteristics.

Table 2.73 ACMPLP characteristics

Conditions: VCC = AVCC0 = 1.8 to 5.5 V, VSS = AVSS0 = 0 V

Item		Symbol	Min	Typ	Max	Unit	Test conditions
Reference voltage range		VREF	0	-	VCC –1.4	V	-
Input voltage range		VI	0	-	VCC	V	-
Output delay	High-speed mode	Td	-	-	1.2	μs	VCC = 3.0 Slew rate of input signal > 50 mV/μs
	Low-speed mode		-	-	5	μs	
	Window mode		-	-	2	μs	
Offset voltage	High-speed mode	-	-	-	50	mV	-
	Low-speed mode	-	-	-	40	mV	-
	Window mode	-	-	-	60	mV	-
Internal reference voltage for window mode		VRFH	-	0.76 × VCC	-	V	-
		VRFL	-	0.24 × VCC	-	V	-
Operation stabilization wait time		T_{cmp}	100	-	-	μs	-

2.14 OPAMP Characteristics

Table 2.74 OPAMP characteristics

Conditions: Ta = –40 to +105°C, 1.8 V ≤ AVCC0 = VCC ≤ 5.5 V, VSS = AVSS0 = 0 V)

Item	Symbol	Conditions		Min	Typ	Max	Unit
Common mode input range	Vicm1	Low-power consumption mode		0.2	-	AVCC0 – 0.5	V
	Vicm2	High-speed mode		0.3	-	AVCC0 – 0.6	V
Output voltage range	Vo1	Low-power consumption mode		0.1	-	AVCC0 – 0.1	V
	Vo2	High-speed mode		0.1	-	AVCC0 – 0.1	V
Input offset voltage	Vioff	3σ		–10	-	10	mV
Open gain	Av			60	120	-	dB
Gain-bandwidth (GB) product	GBW1	Low-power consumption mode		-	0.04	-	MHz
	GBW2	High-speed mode		-	1.7	-	MHz
Phase margin	PM	CL = 20 pF		50	-	-	deg
Gain margin	GM	CL = 20 pF		10	-	-	dB
Equivalent input noise	Vnoise1	f = 1 kHz	Low-power consumption mode	-	230	-	nV/√Hz
	Vnoise2	f = 10 kHz		-	200	-	nV/√Hz
	Vnoise3	f = 1 kHz	High-speed mode	-	90	-	nV/√Hz
	Vnoise4	f = 2 kHz		-	70	-	nV/√Hz
Power supply reduction ratio	PSRR			-	90	-	dB
Common mode signal reduction ratio	CMRR			-	90	-	dB
Stabilization wait time	Tstd1	CL = 20 pF Only operational amplifier is activated *1	Low-power consumption mode	650	-	-	μs
	Tstd2		High-speed mode	13	-	-	μs
	Tstd3	CL = 20 pF Operational amplifier and reference current circuit are activated simultaneously	Low-power consumption mode	650	-	-	μs
	Tstd4		High-speed mode	13	-	-	μs
Settling time	Tset1	CL = 20 pF	Low-power consumption mode	-	-	750	μs
	Tset2		High-speed mode	-	-	13	μs
Slew rate	Tslew1	CL = 20 pF	Low-power consumption mode	-	0.02	-	V/μs
	Tslew2		High-speed mode	-	1.1	-	V/μs
Load current	Iload1	Low-power consumption mode		–100	-	100	μA
	Iload2	High-speed mode		–100	-	100	μA
Load capacitance	CL			-	-	20	pF

Note 1. When the operational amplifier reference current circuit is activated in advance.

2.15 Flash Memory Characteristics

2.15.1 Code Flash Memory Characteristics

Table 2.75 Code flash characteristics (1)

Item		Symbol	Min	Typ	Max	Unit	Test conditions
Reprogramming/erasure cycle*1		N_{PEC}	1000	-	-	Times	-
Data hold time	After 1000 times of N_{PEC}	t_{DRP}	20*2, *3	-	-	Year	T_a = +85°C

Note 1. The reprogram/erase cycle is the number of erasure for each block. When the reprogram/erase cycle is n times (n = 1,000), erasing can be performed n times for each block. For instance, when 4-byte programming is performed 256 times for different addresses in 1-KB blocks, and then the entire block is erased, the reprogram/erase cycle is counted as one. However, programming the same address for several times as one erasure is not enabled. (overwriting is prohibited).
Note 2. Characteristic when using the flash memory programmer and the self-programming library provided by Renesas Electronics.
Note 3. This result is obtained from reliability testing.

Table 2.76 Code flash characteristics (2)
High-speed operating mode
Conditions: VCC = AVCC0 = 2.7 to 5.5 V

Item		Symbol	FCLK = 1 MHz			FCLK = 32 MHz			Unit
			Min	Typ	Max	Min	Typ	Max	
Programming time	8-byte	t_{P4}	-	116	998	-	54	506	μs
Erasure time	2-KB	t_{E1K}	-	9.03	287	-	5.67	222	ms
Blank check time	8-byte	t_{BC4}	-	-	56.8	-	-	16.6	μs
	2-KB	t_{BC1K}	-	-	1899	-	-	140	μs
Erase suspended time		t_{SED}	-	-	22.5	-	-	10.7	μs
Start-up area switching setting time		t_{SAS}	-	21.7	585	-	12.1	447	ms
Access window time		t_{AWS}	-	21.7	585	-	12.1	447	ms
OCD/serial programmer ID setting time		t_{OSIS}	-	21.7	585	-	12.1	447	ms
ROM mode transition wait time 1		t_{DIS}	2	-	-	2	-	-	μs
ROM mode transition wait time 2		t_{MS}	5	-	-	5	-	-	μs

Note: Does not include the time until each operation of the flash memory is started after instructions are executed by the software.
Note: The lower-limit frequency of FCLK is 1 MHz during programming or erasing the flash memory. When using FCLK at below 4 MHz, the frequency can be set to 1 MHz, 2 MHz, or 3 MHz. A non-integer frequency such as 1.5 MHz cannot be set.
Note: The frequency accuracy of FCLK must be ±3.5%. Confirm the frequency accuracy of the clock source.

Table 2.77 Code flash characteristics (3)
Middle-speed operating mode
Conditions: VCC = AVCC0 = 1.8 to 5.5 V, Ta = –40 to +85°C

Item		Symbol	FCLK = 1 MHz			FCLK = 8 MHz			Unit
			Min	Typ	Max	Min	Typ	Max	
Programming time	8-byte	t_{P4}	-	157	1411	-	101	966	μs
Erasure time	2-KB	t_{E1K}	-	9.10	289	-	6.10	228	ms
Blank check time	8-byte	t_{BC4}	-	-	87.7	-	-	52.5	μs
	2-KB	t_{BC1K}	-	-	1930	-	-	414	μs
Erase suspended time		t_{SED}	-	-	32.7	-	-	21.6	μs
Start-up area switching setting time		t_{SAS}	-	22.5	592	-	14.0	464	ms
Access window time		t_{AWS}	-	22.5	592	-	14.0	464	ms
OCD/serial programmer ID setting time		t_{OSIS}	-	22.5	592	-	14.0	464	ms
Flash memory mode transition wait time 1		t_{DIS}	2	-	-	2	-	-	μs
Flash memory mode transition wait time 2		t_{MS}	720	-	-	720	-	-	ns

Note: Does not include the time until each operation of the flash memory is started after instructions are executed by the software.
Note: The lower-limit frequency of FCLK is 1 MHz during programming or erasing the flash memory. When using FCLK at below 4 MHz, the frequency can be set to 1 MHz, 2 MHz, or 3 MHz. A non-integer frequency such as 1.5 MHz cannot be set.
Note: The frequency accuracy of FCLK must be ±3.5%. Confirm the frequency accuracy of the clock source.

2.15.2 Data Flash Memory Characteristics

Table 2.78 Data flash characteristics (1)

Item		Symbol	Min	Typ	Max	Unit	Test conditions
Reprogramming/erasure cycle*1		N_{DPEC}	100000	1000000	-	Times	-
Data hold time	After 10000 times of N_{DPEC}	t_{DDRP}	20*2, *3	-	-	Year	Ta = +85°C
	After 100000 times of N_{DPEC}		5*2, *3	-	-	Year	
	After 1000000 times of N_{DPEC}		-	1*2, *3	-	Year	Ta = +25°C

Note 1. The reprogram/erase cycle is the number of erasure for each block. When the reprogram/erase cycle is n times (n = 100,000), erasing can be performed n times for each block. For instance, when 1-byte programming is performed 1,000 times for different addresses in 1-byte blocks, and then the entire block is erased, the reprogram/erase cycle is counted as one. However, programming the same address for several times as one erasure is not enabled. (overwriting is prohibited).
Note 2. Characteristics when using the flash memory programmer and the self-programming library provided by Renesas Electronics.
Note 3. These results are obtained from reliability testing.

Table 2.79 Data flash characteristics (2)
High-speed operating mode
Conditions: VCC = AVCC0 = 2.7 to 5.5 V

Item		Symbol	FCLK = 4 MHz			FCLK = 32 MHz			Unit
			Min	Typ	Max	Min	Typ	Max	
Programming time	1-byte	t_{DP1}	-	52.4	463	-	42.1	387	μs
Erasure time	1-KB	t_{DE1K}	-	8.98	286	-	6.42	237	ms
Blank check time	1-byte	t_{DBC1}	-	-	24.3	-	-	16.6	μs
	1-KB	t_{DBC1K}	-	-	1872	-	-	512	μs
Suspended time during erasing		t_{DSED}	-	-	13.0	-	-	10.7	μs
Data flash STOP recovery time		t_{DSTOP}	5	-	-	5	-	-	μs

Note 1. Does not include the time until each operation of the flash memory is started after instructions are executed by the software.
Note 2. The lower-limit frequency of FCLK is 1 MHz during programming or erasing the flash memory. When using FCLK at below 4 MHz, the frequency can be set to 1 MHz, 2 MHz, or 3 MHz. A non-integer frequency such as 1.5 MHz cannot be set.
Note 3. The frequency accuracy of FCLK must be ±3.5%. Confirm the frequency accuracy of the clock source.

Table 2.80 Data flash characteristics (3)
Middle-speed operating mode
Conditions: VCC = AVCC0 = 1.8 to 5.5 V, Ta = –40 to +85°C

Item		Symbol	FCLK = 4 MHz			FCLK = 32 MHz			Unit
			Min	Typ	Max	Min	Typ	Max	
Programming time	1-byte	t_{DP1}	-	94.7	886	-	87.0	837	μs
Erasure time	1-KB	t_{DE1K}	-	9.59	299	-	7.82	266	ms
Blank check time	1-byte	t_{DBC1}	-	-	56.2	-	-	50.9	μs
	1-KB	t_{DBC1K}	-	-	2.17	-	-	1.21	ms
Suspended time during erasing		t_{DSED}	-	-	23.0	-	-	21.0	μs
Data flash STOP recovery time		t_{DSTOP}	720	-	-	720	-	-	ns

Note 1. Does not include the time until each operation of the flash memory is started after instructions are executed by the software.
Note 2. The lower-limit frequency of FCLK is 1 MHz during programming or erasing the flash memory. When using FCLK at below 4 MHz, the frequency can be set to 1 MHz, 2 MHz, or 3 MHz. A non-integer frequency such as 1.5 MHz cannot be set.
Note 3. The frequency accuracy of FCLK must be ±3.5%. Confirm the frequency accuracy of the clock source.

2.16 Boundary Scan

Table 2.81 Boundary scan
Conditions: VCC = AVCC = 2.4 to 5.5 V

Item	Symbol	Min	Typ	Max	Unit	Test conditions
TCK clock cycle time	t_{TCKcyc}	100	-	-	ns	Figure 2.89
TCK clock high pulse width	t_{TCKH}	45	-	-	ns	
TCK clock low pulse width	t_{TCKL}	45	-	-	ns	
TCK clock rise time	t_{TCKr}	-	-	5	ns	
TCK clock fall time	t_{TCKf}	-	-	5	ns	
TMS setup time	t_{TMSS}	20	-	-	ns	Figure 2.90
TMS hold time	t_{TMSH}	20	-	-	ns	
TDI setup time	t_{TDIS}	20	-	-	ns	
TDI hold time	t_{TDIH}	20	-	-	ns	
TDO data delay	t_{TDOD}	-	-	70	ns	
Boundary Scan circuit start up time*1	t_{BSSTUP}	t_{RESWP}	-	-	-	Figure 2.91

Note 1. Boundary scan does not function until Power-On-Reset becomes negative.

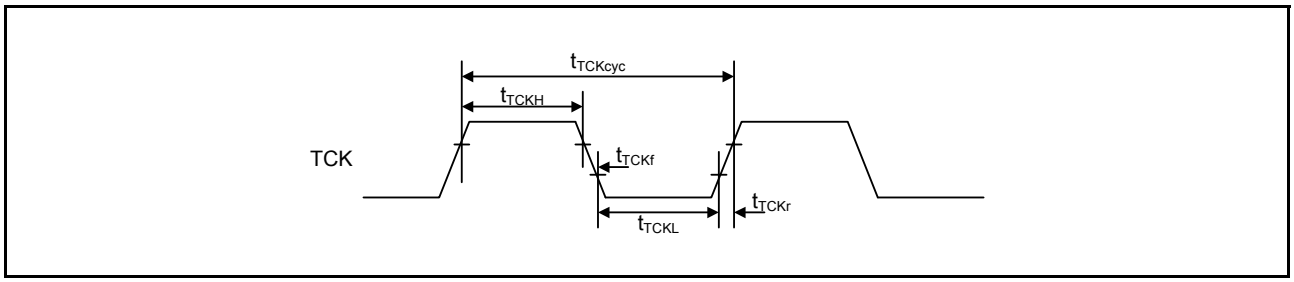

Figure 2.89 Boundary scan TCK timing

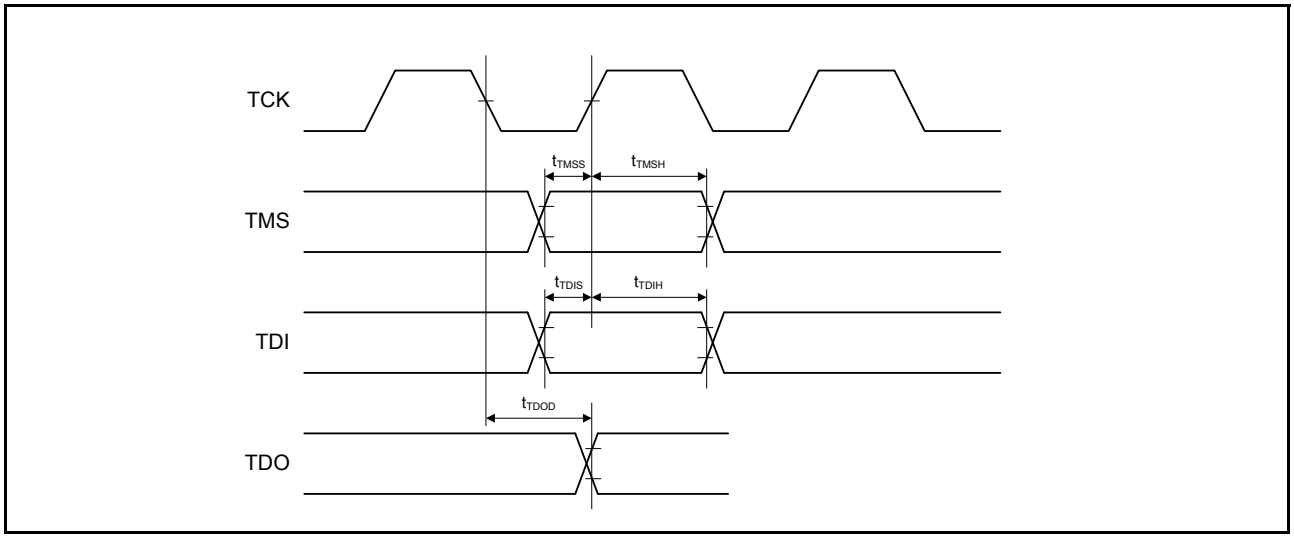

Figure 2.90 Boundary scan input/output timing

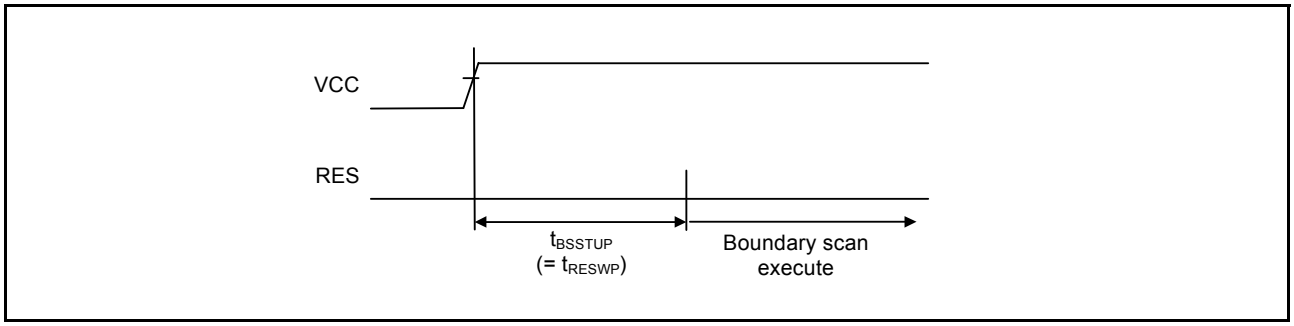

Figure 2.91 Boundary scan circuit start up timing

2.17 Joint European Test Action Group (JTAG)

Table 2.82 JTAG (Debug) characteristics (1)
Conditions: VCC = AVCC = 2.4 to 5.5 V

Item	Symbol	Min	Typ	Max	Unit	Test conditions
TCK clock cycle time	t_{TCKcyc}	80	-	-	ns	Figure 2.92
TCK clock high pulse width	t_{TCKH}	35	-	-	ns	
TCK clock low pulse width	t_{TCKL}	35	-	-	ns	
TCK clock rise time	t_{TCKr}	-	-	5	ns	
TCK clock fall time	t_{TCKf}	-	-	5	ns	
TMS setup time	t_{TMSS}	16	-	-	ns	Figure 2.93
TMS hold time	t_{TMSH}	16	-	-	ns	
TDI setup time	t_{TDIS}	16	-	-	ns	
TDI hold time	t_{TDIH}	16	-	-	ns	
TDO data delay time	t_{TDOD}	-	-	70	ns	

Table 2.83 JTAG (Debug) characteristics (2)
Conditions: VCC = AVCC = 1.6 to 2.4 V

Item	Symbol	Min	Typ	Max	Unit	Test conditions
TCK clock cycle time	t_{TCKcyc}	250	-	-	ns	Figure 2.92
TCK clock high pulse width	t_{TCKH}	120	-	-	ns	
TCK clock low pulse width	t_{TCKL}	120	-	-	ns	
TCK clock rise time	t_{TCKr}	-	-	5	ns	
TCK clock fall time	t_{TCKf}	-	-	5	ns	
TMS setup time	t_{TMSS}	50	-	-	ns	Figure 2.93
TMS hold time	t_{TMSH}	50	-	-	ns	
TDI setup time	t_{TDIS}	50	-	-	ns	
TDI hold time	t_{TDIH}	50	-	-	ns	
TDO data delay time	t_{TDOD}	-	-	150	ns	

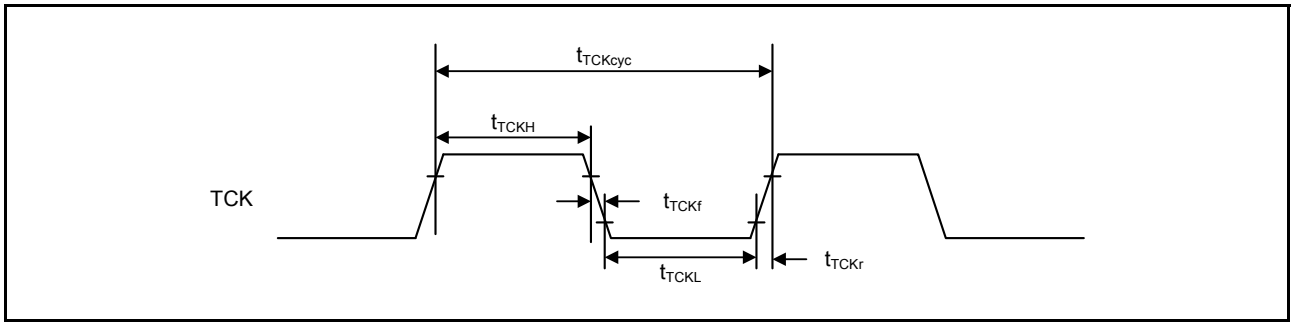

Figure 2.92 JTAG TCK timing

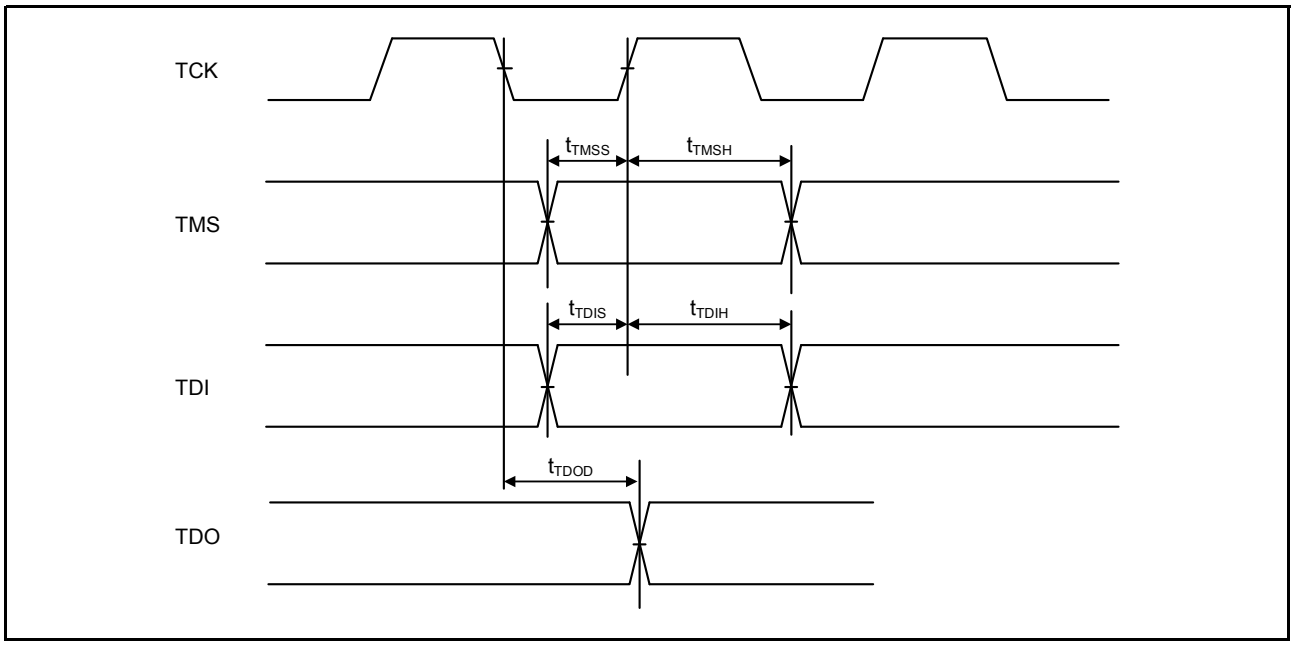

Figure 2.93 JTAG input/output timing

2.17.1 Serial Wire Debug (SWD)

Table 2.84 SWD characteristics (1)
Conditions: VCC = AVCC0 = 2.4 to 5.5 V

Item	Symbol	Min	Typ	Max	Unit	Test conditions
SWCLK clock cycle time	$t_{SWCKcyc}$	80	-	-	ns	Figure 2.94
SWCLK clock high pulse width	t_{SWCKH}	35	-	-	ns	
SWCLK clock low pulse width	t_{SWCKL}	35	-	-	ns	
SWCLK clock rise time	t_{SWCKr}	-	-	5	ns	
SWCLK clock fall time	t_{SWCKf}	-	-	5	ns	
SWDIO setup time	t_{SWDS}	16	-	-	ns	Figure 2.95
SWDIO hold time	t_{SWDH}	16	-	-	ns	
SWDIO data delay time	t_{SWDD}	2	-	70	ns	

Table 2.85 SWD characteristics (2)
Conditions: VCC = AVCC0 = 1.6 to 2.4 V

Item	Symbol	Min	Typ	Max	Unit	Test conditions
SWCLK clock cycle time	$t_{SWCKcyc}$	250	-	-	ns	Figure 2.94
SWCLK clock high pulse width	t_{SWCKH}	120	-	-	ns	
SWCLK clock low pulse width	t_{SWCKL}	120	-	-	ns	
SWCLK clock rise time	t_{SWCKr}	-	-	5	ns	
SWCLK clock fall time	t_{SWCKf}	-	-	5	ns	
SWDIO setup time	t_{SWDS}	50	-	-	ns	Figure 2.95
SWDIO hold time	t_{SWDH}	50	-	-	ns	
SWDIO data delay time	t_{SWDD}	2	-	150	ns	

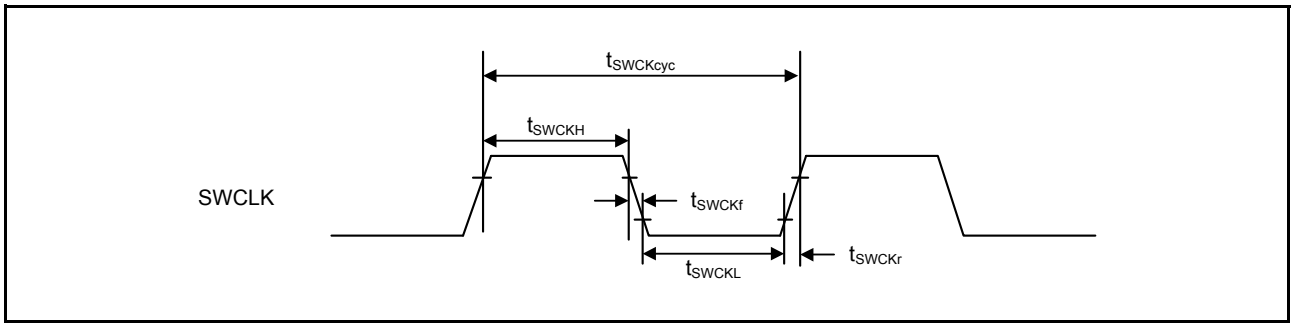

Figure 2.94 SWD SWCLK timing

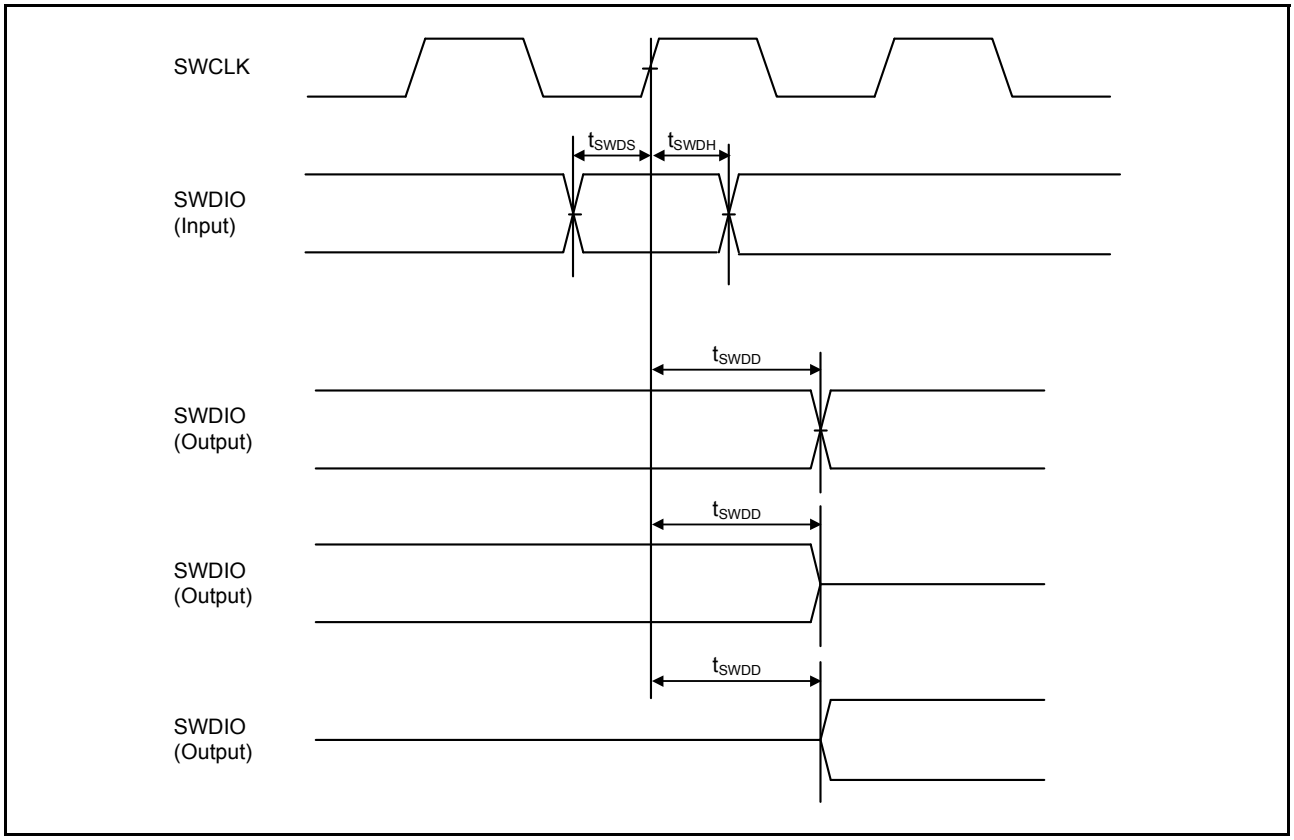

Figure 2.95 SWD input/output timing

Appendix 1. Package Dimensions

Information on the latest version of the package dimensions or mountings is displayed in “Packages” on the Renesas Electronics Corporation website.

JEITA Package Code	RENESAS Code	Previous Code	MASS[Typ.]
P-TFLGA145-7x7-0.50	PTLG0145KA-A	145F0G	0.1g

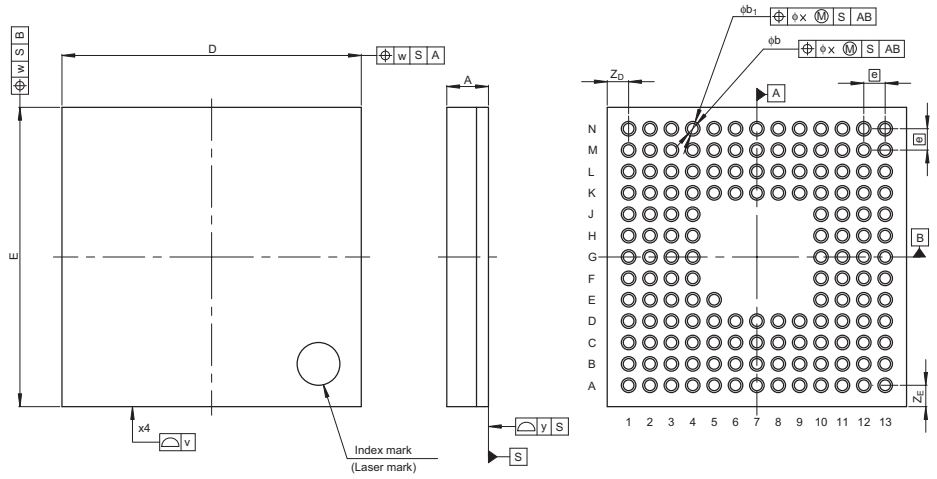

Reference Symbol	Dimension in Millimeters		
	Min	Nom	Max
D	—	7.0	—
E	—	7.0	—
v	—	—	0.15
w	—	—	0.20
A	—	—	1.05
e	—	0.5	—
b	0.21	0.25	0.29
b_1	0.29	0.34	0.39
x	—	—	0.08
y	—	—	0.08
Z_D	—	0.5	—
Z_E	—	0.5	—

Figure 1.1 LGA 145-pin

JEITA Package Code	RENESAS Code	Previous Code	MASS (Typ) [g]
P-LFQFP144-20x20-0.50	PLQP0144KA-B	—	1.2

Unit: mm

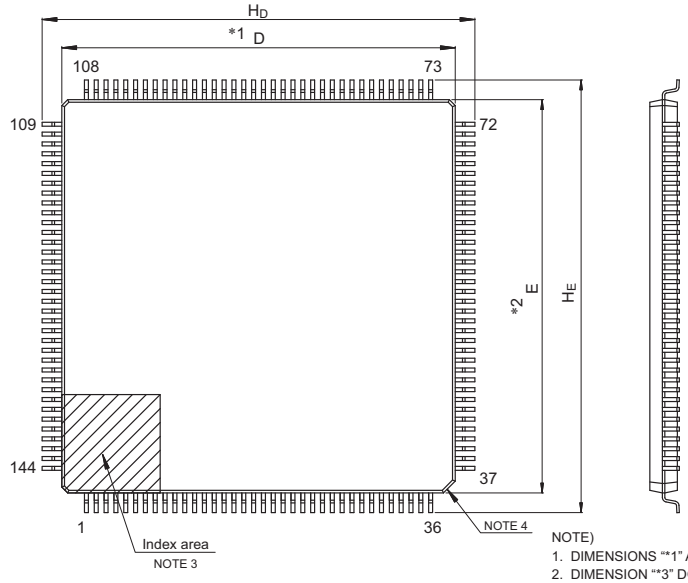

NOTE)
1. DIMENSIONS "*1" AND "*2" DO NOT INCLUDE MOLD FLASH.
2. DIMENSION "*3" DOES NOT INCLUDE TRIM OFFSET.
3. PIN 1 VISUAL INDEX FEATURE MAY VARY, BUT MUST BE LOCATED WITHIN THE HATCHED AREA.
4. CHAMFERS AT CORNERS ARE OPTIONAL, SIZE MAY VARY.

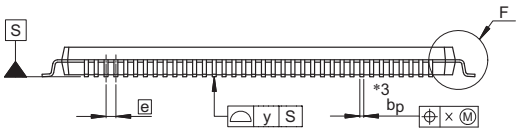

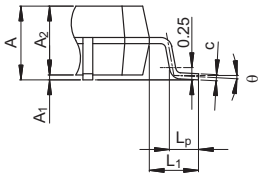

Detail F

Reference Symbol	Dimensions in millimeters		
	Min	Nom	Max
D	19.9	20.0	20.1
E	19.9	20.0	20.1
A_2	—	1.4	—
H_D	21.8	22.0	22.2
H_E	21.8	22.0	22.2
A	—	—	1.7
A_1	0.05	—	0.15
b_p	0.17	0.20	0.27
c	0.09	—	0.20
θ	0°	3.5°	8°
e	—	0.5	—
x	—	—	0.08
y	—	—	0.08
L_p	0.45	0.6	0.75
L_1	—	1.0	—

© 2016 Renesas Electronics Corporation. All rights reserved.

Figure 1.2 LQFP 144-pin

JEITA Package Code	RENESAS Code	Previous Code	MASS (TYP.) [g]
-	PLBG0121JA-A	P121F1-65-CAH	-

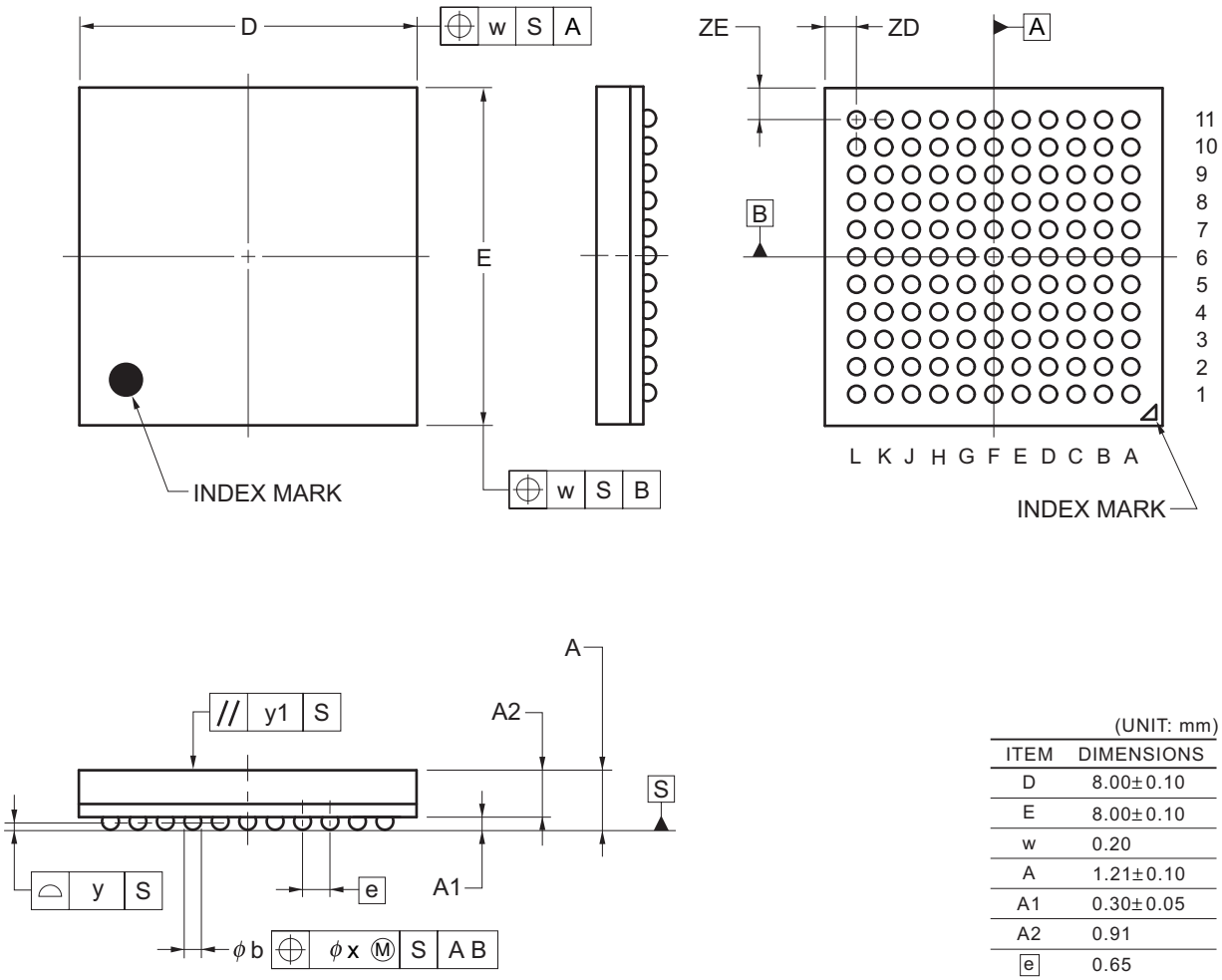

(UNIT: mm)

ITEM	DIMENSIONS
D	8.00±0.10
E	8.00±0.10
w	0.20
A	1.21±0.10
A1	0.30±0.05
A2	0.91
e	0.65
b	0.40±0.05
x	0.08
y	0.10
y1	0.20
ZD	0.75
ZE	0.75

Figure 1.3 BGA 121-pin

JEITA Package Code	RENESAS Code	Previous Code	MASS[Typ.]
P-TFLGA100-7x7-0.65	PTLG0100JA-A	100F0G	0.1g

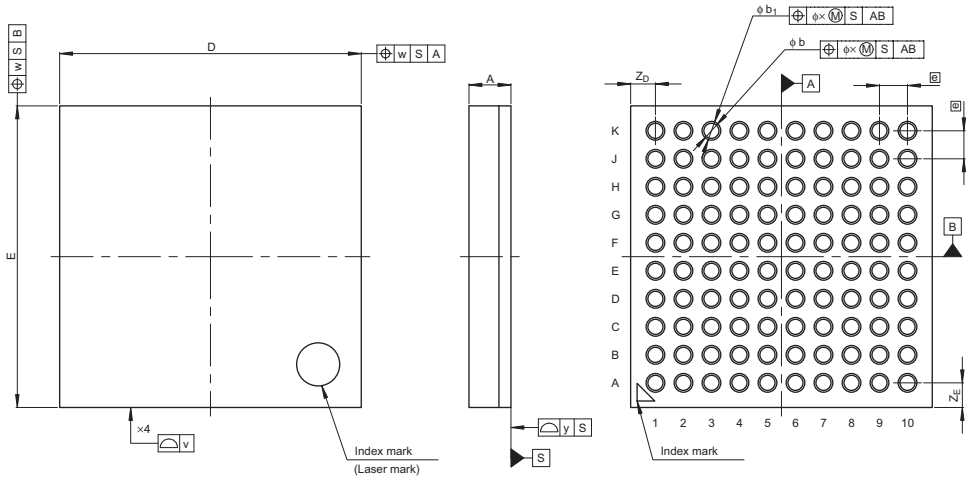

Reference Symbol	Dimension in Millimeters		
	Min	Nom	Max
D	—	7.0	—
E	—	7.0	—
v	—	—	0.15
w	—	—	0.20
A	—	—	1.05
e	—	0.65	—
b	0.31	0.35	0.39
b_1	0.385	0.435	0.485
x	—	—	0.08
y	—	—	0.10
Z_D	—	0.575	—
Z_E	—	0.575	—

Figure 1.4 LGA 100-pin

JEITA Package Code	RENESAS Code	Previous Code	MASS (Typ) [g]
P-LFQFP100-14x14-0.50	PLQP0100KB-B	—	0.6

Unit: mm

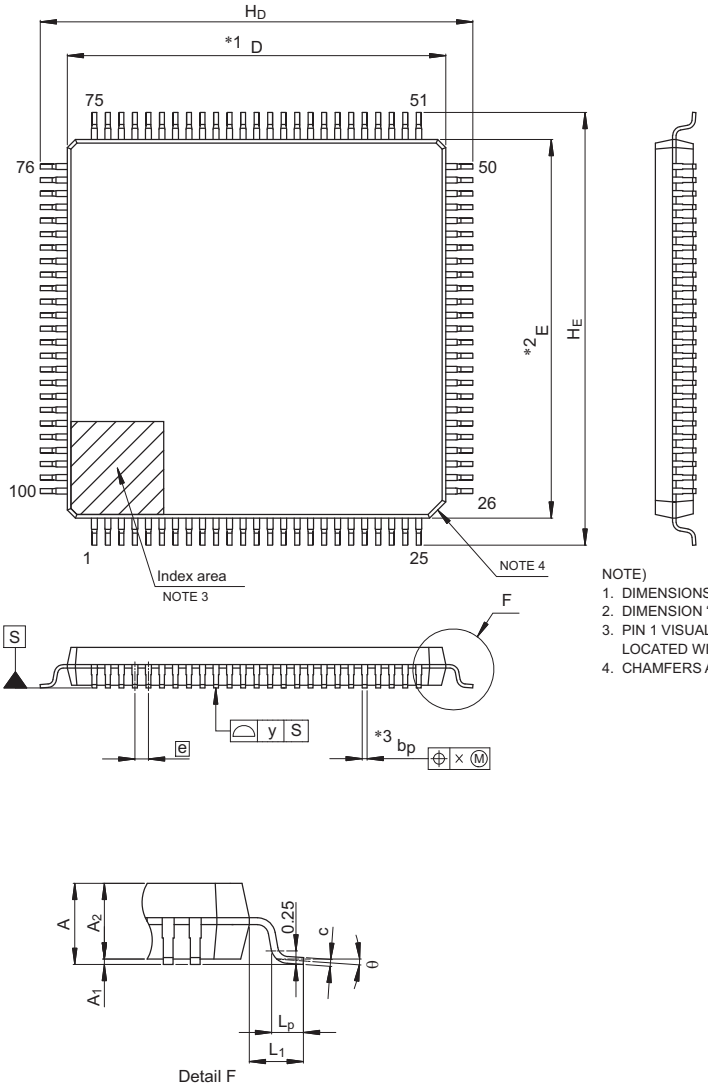

NOTE)
1. DIMENSIONS "*1" AND "*2" DO NOT INCLUDE MOLD FLASH.
2. DIMENSION "*3" DOES NOT INCLUDE TRIM OFFSET.
3. PIN 1 VISUAL INDEX FEATURE MAY VARY, BUT MUST BE LOCATED WITHIN THE HATCHED AREA.
4. CHAMFERS AT CORNERS ARE OPTIONAL, SIZE MAY VARY.

Reference Symbol	Dimensions in millimeters		
	Min	Nom	Max
D	13.9	14.0	14.1
E	13.9	14.0	14.1
A_2	—	1.4	—
H_D	15.8	16.0	16.2
H_E	15.8	16.0	16.2
A	—	—	1.7
A_1	0.05	—	0.15
b_p	0.15	0.20	0.27
c	0.09	—	0.20
θ	0°	3.5°	8°
e	—	0.5	—
x	—	—	0.08
y	—	—	0.08
L_p	0.45	0.6	0.75
L_1	—	1.0	—

© 2015 Renesas Electronics Corporation. All rights reserved.

Figure 1.5 LQFP 100-pin

JEITA Package Code	RENESAS Code	Previous Code	MASS (Typ) [g]
P-LFQFP64-10x10-0.50	PLQP0064KB-C	—	0.3

Unit: mm

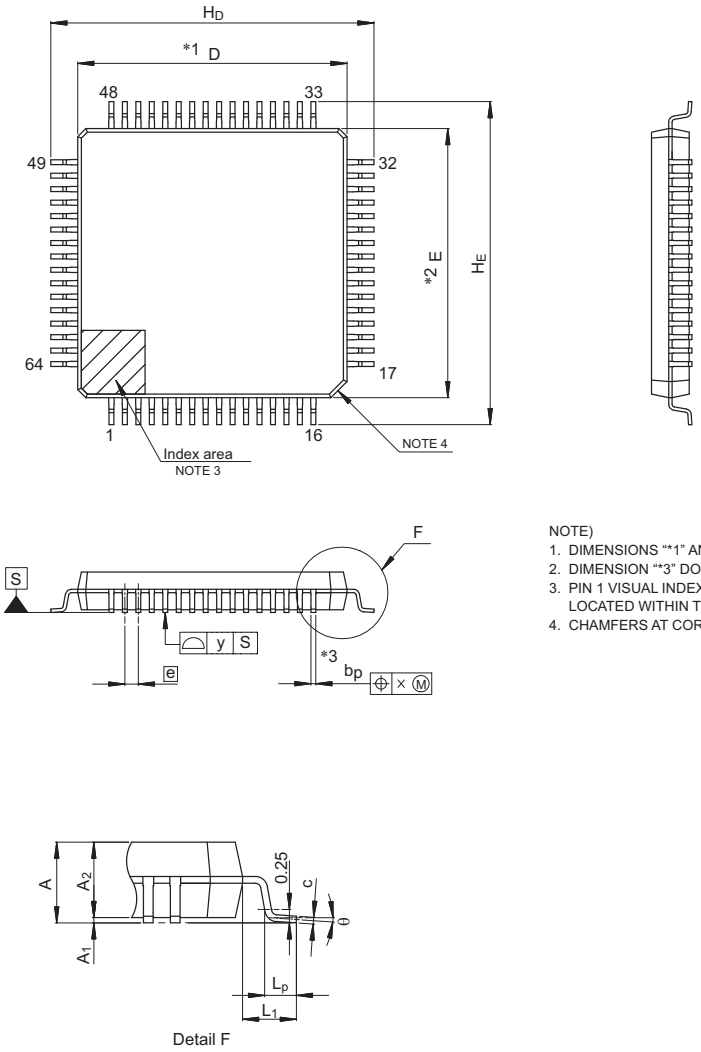

NOTE)
1. DIMENSIONS "*1" AND "*2" DO NOT INCLUDE MOLD FLASH.
2. DIMENSION "*3" DOES NOT INCLUDE TRIM OFFSET.
3. PIN 1 VISUAL INDEX FEATURE MAY VARY, BUT MUST BE LOCATED WITHIN THE HATCHED AREA.
4. CHAMFERS AT CORNERS ARE OPTIONAL, SIZE MAY VARY.

Reference Symbol	Dimensions in millimeters		
	Min	Nom	Max
D	9.9	10.0	10.1
E	9.9	10.0	10.1
A_2	—	1.4	—
H_D	11.8	12.0	12.2
H_E	11.8	12.0	12.2
A	—	—	1.7
A_1	0.05	—	0.15
b_p	0.15	0.20	0.27
c	0.09	—	0.20
θ	0°	3.5°	8°
e	—	0.5	—
x	—	—	0.08
y	—	—	0.08
L_p	0.45	0.6	0.75
L_1	—	1.0	—

© 2015 Renesas Electronics Corporation. All rights reserved.

Figure 1.6 LQFP 64-pin

JEITA Package code	RENESAS code	Previous code	MASS(TYP.)[g]
P-HWQFN64-8x8-0.40	PWQN0064LA-A	P64K8-40-9B5-3	0.16

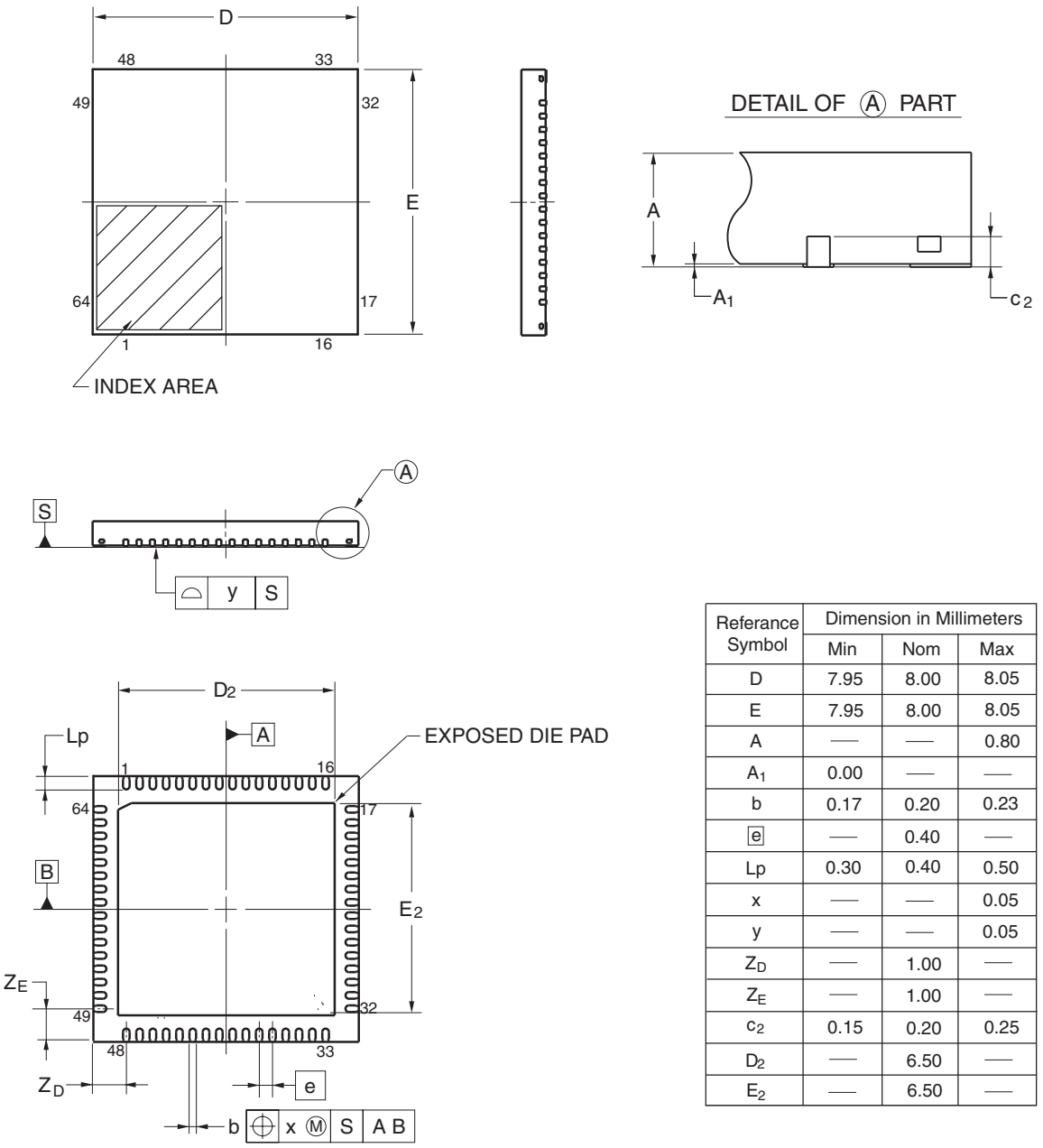

Referance Symbol	Dimension in Millimeters		
	Min	Nom	Max
D	7.95	8.00	8.05
E	7.95	8.00	8.05
A	—	—	0.80
A_1	0.00	—	—
b	0.17	0.20	0.23
e	—	0.40	—
Lp	0.30	0.40	0.50
x	—	—	0.05
y	—	—	0.05
Z_D	—	1.00	—
Z_E	—	1.00	—
c_2	0.15	0.20	0.25
D_2	—	6.50	—
E_2	—	6.50	—

©2013 Renesas Electronics Corporation. All rights reserved.

Figure 1.7 QFN 64-pin

Revision History	S3A7 Datasheet

Rev.	Date	Chapter	Summary
0.80	Oct. 12, 2015	—	First Edition issued
0.85	Dec. 15, 2015	—	Second Edition issued
1.00	Feb. 23, 2016	section 1, Overview	Updated channel number of CTSU in Table 1.14, Function comparison
			Updated pin name of CTSU in section 1.5, Pin Functions
			Updated pin name of CTSU in section 1.7, Pin Lists
		section 2, Electrical Characteris-tics	Added section 2.17, Joint European Test Action Group (JTAG) and section 2.17.1, Serial Wire Debug (SWD) in section 2, Electrical Characteristics
			Updated input voltage in Table 2.1, Absolute maximum ratings
			Added section 2.2.5, I/O Pin Output Characteristics of Low Drive Capacity
			Updated Table 2.6, I/O I_{OH}, I_{OL} in section 2.2.3, I/O I_{OH}, I_{OL} to change from normal drive to low drive
			Changed Note 6 to Note 5. in Table 2.11, Operating and standby current (1)
			Updated the conditions in Table 2.13, Operating and standby current (3)
			Updated Note 2. in Table 2.17, Operation frequency value in high-speed operating mode
			Updated Note 2. in Table 2.18, Operation frequency value in middle-speed mode
			Removed the 2nd note from Table 2.19, Operation frequency value in low-speed mode
			Updated Note 2. in Table 2.20, Operation frequency value in low-voltage mode
			Updated Table 2.22, Clock timing
			Updated the condition of the I/O Ports in Table 2.35, I/O Ports, POEG, GPT, AGT, KINT, and ADC14 trigger timing
			Removed the 2nd note from Table 2.37, SCI timing (1)
			Updated the conditions in Table 2.38, SCI timing (2)
			Updated Figure 2.59, SPI timing (master, CPHA = 0) (bit rate: PCLKA division ratio is set to 1/2)
			Added the conditions in Table 2.42, IIC timing
			Updated Figure 2.68, SSI data transmit/receive timing (SSICR.SCKP = 0)
			Updated the Quantization error in the following tables: · Table 2.48, A/D conversion characteristics (1) in high-speed mode · Table 2.49, A/D conversion characteristics (2) in high-speed mode · Table 2.50, A/D conversion characteristics (3) in high-speed mode · Table 2.51, A/D conversion characteristics (4) in low power mode · Table 2.52, A/D conversion characteristics (5) in low power mode
			Updated Table 2.55, 14-Bit A/D converter channel classification
			Updated Table 2.64, Battery Backup Function Characteristics
			Deleted VLCD = 0Dh to 13h in Table 2.70, Internal voltage boosting method LCD charac-teristics
			Updated the response time in Table 2.72, ACMPHS characteristics
			Added the temperature in Table 2.77, Code flash characteristics (3)
			Added the temperature in Table 2.80, Data flash characteristics (3)
		All	Deleted # from pin names

All trademarks and registered trademarks are the property of their respective owners.

General Precautions in the Handling of Microprocessing Unit and Microcontroller Unit Products

1. Precaution against Electrostatic Discharge (ESD)

A strong electrical field, when exposed to a CMOS device, can cause destruction of the gate oxide and ultimately degrade the device operation. Steps must be taken to stop the generation of static electricity as much as possible, and quickly dissipate it when it occurs. Environmental control must be adequate. When it is dry, a humidifier should be used. This is recommended to avoid using insulators that can easily build up static electricity. Semiconductor devices must be stored and transported in an anti-static container, static shielding bag or conductive material. All test and measurement tools including work benches and floors must be grounded. The operator must also be grounded using a wrist strap. Semiconductor devices must not be touched with bare hands. Similar precautions must be taken for printed circuit boards with mounted semiconductor devices.

2. Processing at power-on

The state of the product is undefined at the time when power is supplied. The states of internal circuits in the LSI are indeterminate and the states of register settings and pins are undefined at the time when power is supplied. In a finished product where the reset signal is applied to the external reset pin, the states of pins are not guaranteed from the time when power is supplied until the reset process is completed. In a similar way, the states of pins in a product that is reset by an on-chip power-on reset function are not guaranteed from the time when power is supplied until the power reaches the level at which resetting is specified.

3. Input of signal during power-off state

Do not input signals or an I/O pull-up power supply while the device is powered off. The current injection that results from input of such a signal or I/O pull-up power supply may cause malfunction and the abnormal current that passes in the device at this time may cause degradation of internal elements. Follow the guideline for input signal during power-off state as described in your product documentation.

4. Handling of unused pins

Handle unused pins in accordance with the directions given under handling of unused pins in the manual. The input pins of CMOS products are generally in the high-impedance state. In operation with an unused pin in the open-circuit state, extra electromagnetic noise is induced in the vicinity of the LSI, an associated shoot-through current flows internally, and malfunctions occur due to the false recognition of the pin state as an input signal become possible.

5. Clock signals

After applying a reset, only release the reset line after the operating clock signal becomes stable. When switching the clock signal during program execution, wait until the target clock signal is stabilized. When the clock signal is generated with an external resonator or from an external oscillator during a reset, ensure that the reset line is only released after full stabilization of the clock signal. Additionally, when switching to a clock signal produced with an external resonator or by an external oscillator while program execution is in progress, wait until the target clock signal is stable.

6. Voltage application waveform at input pin

Waveform distortion due to input noise or a reflected wave may cause malfunction. If the input of the CMOS device stays in the area between VIL (Max.) and VIH (Min.) due to noise, for example, the device may malfunction. Take care to prevent chattering noise from entering the device when the input level is fixed, and also in the transition period when the input level passes through the area between VIL (Max.) and VIH (Min.).

7. Prohibition of access to reserved addresses

Access to reserved addresses is prohibited. The reserved addresses are provided for possible future expansion of functions. Do not access these addresses as the correct operation of the LSI is not guaranteed.

8. Differences between products

Before changing from one product to another, for example to a product with a different part number, confirm that the change will not lead to problems. The characteristics of a microprocessing unit or microcontroller unit products in the same group but having a different part number might differ in terms of internal memory capacity, layout pattern, and other factors, which can affect the ranges of electrical characteristics, such as characteristic values, operating margins, immunity to noise, and amount of radiated noise. When changing to a product with a different part number, implement a system-evaluation test for the given product.

Notice

1. Descriptions of circuits, software and other related information in this document are provided only to illustrate the operation of semiconductor products and application examples. You are fully responsible for the incorporation of these circuits, software, and information in the design of your equipment. Renesas Electronics assumes no responsibility for any losses incurred by you or third parties arising from the use of these circuits, software, or information.
2. Renesas Electronics has used reasonable care in preparing the information included in this document, but Renesas Electronics does not warrant that such information is error free. Renesas Electronics assumes no liability whatsoever for any damages incurred by you resulting from errors in or omissions from the information included herein.
3. Renesas Electronics does not assume any liability for infringement of patents, copyrights, or other intellectual property rights of third parties by or arising from the use of Renesas Electronics products or technical information described in this document. No license, express, implied or otherwise, is granted hereby under any patents, copyrights or other intellectual property rights of Renesas Electronics or others.
4. You should not alter, modify, copy, or otherwise misappropriate any Renesas Electronics product, whether in whole or in part. Renesas Electronics assumes no responsibility for any losses incurred by you or third parties arising from such alteration, modification, copy or otherwise misappropriation of Renesas Electronics product.
5. Renesas Electronics products are classified according to the following two quality grades: "Standard" and "High Quality". The recommended applications for each Renesas Electronics product depends on the product's quality grade, as indicated below.
   "Standard": Computers; office equipment; communications equipment; test and measurement equipment; audio and visual equipment; home electronic appliances; machine tools; personal electronic equipment; and industrial robots etc.
   "High Quality": Transportation equipment (automobiles, trains, ships, etc.); traffic control systems; anti-disaster systems; anti-crime systems; and safety equipment etc.
   Renesas Electronics products are neither intended nor authorized for use in products or systems that may pose a direct threat to human life or bodily injury (artificial life support devices or systems, surgical implantations etc.), or may cause serious property damages (nuclear reactor control systems, military equipment etc.). You must check the quality grade of each Renesas Electronics product before using it in a particular application. You may not use any Renesas Electronics product for any application for which it is not intended. Renesas Electronics shall not be in any way liable for any damages or losses incurred by you or third parties arising from the use of any Renesas Electronics product for which the product is not intended by Renesas Electronics.
6. You should use the Renesas Electronics products described in this document within the range specified by Renesas Electronics, especially with respect to the maximum rating, operating supply voltage range, movement power voltage range, heat radiation characteristics, installation and other product characteristics. Renesas Electronics shall have no liability for malfunctions or damages arising out of the use of Renesas Electronics products beyond such specified ranges.
7. Although Renesas Electronics endeavors to improve the quality and reliability of its products, semiconductor products have specific characteristics such as the occurrence of failure at a certain rate and malfunctions under certain use conditions. Further, Renesas Electronics products are not subject to radiation resistance design. Please be sure to implement safety measures to guard them against the possibility of physical injury, and injury or damage caused by fire in the event of the failure of a Renesas Electronics product, such as safety design for hardware and software including but not limited to redundancy, fire control and malfunction prevention, appropriate treatment for aging degradation or any other appropriate measures. Because the evaluation of microcomputer software alone is very difficult, please evaluate the safety of the final products or systems manufactured by you.
8. Please contact a Renesas Electronics sales office for details as to environmental matters such as the environmental compatibility of each Renesas Electronics product. Please use Renesas Electronics products in compliance with all applicable laws and regulations that regulate the inclusion or use of controlled substances, including without limitation, the EU RoHS Directive. Renesas Electronics assumes no liability for damages or losses occurring as a result of your noncompliance with applicable laws and regulations.
9. Renesas Electronics products and technology may not be used for or incorporated into any products or systems whose manufacture, use, or sale is prohibited under any applicable domestic or foreign laws or regulations. You should not use Renesas Electronics products or technology described in this document for any purpose relating to military applications or use by the military, including but not limited to the development of weapons of mass destruction. When exporting the Renesas Electronics products or technology described in this document, you should comply with the applicable export control laws and regulations and follow the procedures required by such laws and regulations.
10. It is the responsibility of the buyer or distributor of Renesas Electronics products, who distributes, disposes of, or otherwise places the product with a third party, to notify such third party in advance of the contents and conditions set forth in this document, Renesas Electronics assumes no responsibility for any losses incurred by you or third parties as a result of unauthorized use of Renesas Electronics products.
11. This document may not be reproduced or duplicated in any form, in whole or in part, without prior written consent of Renesas Electronics.
12. Please contact a Renesas Electronics sales office if you have any questions regarding the information contained in this document or Renesas Electronics products, or if you have any other inquiries.

(Note 1) "Renesas Electronics" as used in this document means Renesas Electronics Corporation and also includes its majority-owned subsidiaries.

(Note 2) "Renesas Electronics product(s)" means any product developed or manufactured by or for Renesas Electronics.

SALES OFFICES Renesas Electronics Corporation http://www.renesas.com

Refer to "http://www.renesas.com/" for the latest and detailed information.

Renesas Electronics America Inc.
2801 Scott Boulevard Santa Clara, CA 95050-2549, U.S.A.
Tel: +1-408-588-6000, Fax: +1-408-588-6130

Renesas Electronics Canada Limited
9251 Yonge Street, Suite 8309 Richmond Hill, Ontario Canada L4C 9T3
Tel: +1-905-237-2004

Renesas Electronics Europe Limited
Dukes Meadow, Millboard Road, Bourne End, Buckinghamshire, SL8 5FH, U.K
Tel: +44-1628-585-100, Fax: +44-1628-585-900

Renesas Electronics Europe GmbH
Arcadiastrasse 10, 40472 Düsseldorf, Germany
Tel: +49-211-6503-0, Fax: +49-211-6503-1327

Renesas Electronics (China) Co., Ltd.
Room 1709, Quantum Plaza, No.27 ZhiChunLu Haidian District, Beijing 100191, P.R.China
Tel: +86-10-8235-1155, Fax: +86-10-8235-7679

Renesas Electronics (Shanghai) Co., Ltd.
Unit 301, Tower A, Central Towers, 555 Langao Road, Putuo District, Shanghai, P. R. China 200333
Tel: +86-21-2226-0888, Fax: +86-21-2226-0999

Renesas Electronics Hong Kong Limited
Unit 1601-1611, 16/F., Tower 2, Grand Century Place, 193 Prince Edward Road West, Mongkok, Kowloon, Hong Kong
Tel: +852-2265-6688, Fax: +852 2886-9022

Renesas Electronics Taiwan Co., Ltd.
13F, No. 363, Fu Shing North Road, Taipei 10543, Taiwan
Tel: +886-2-8175-9600, Fax: +886 2-8175-9670

Renesas Electronics Singapore Pte. Ltd.
80 Bendemeer Road, Unit #06-02 Hyflux Innovation Centre, Singapore 339949
Tel: +65-6213-0200, Fax: +65-6213-0300

Renesas Electronics Malaysia Sdn.Bhd.
Unit 1207, Block B, Menara Amcorp, Amcorp Trade Centre, No. 18, Jln Persiaran Barat, 46050 Petaling Jaya, Selangor Darul Ehsan, Malaysia
Tel: +60-3-7955-9390, Fax: +60-3-7955-9510

Renesas Electronics India Pvt. Ltd.
No.777C, 100 Feet Road, HAL II Stage, Indiranagar, Bangalore, India
Tel: +91-80-67208700, Fax: +91-80-67208777

Renesas Electronics Korea Co., Ltd.
12F., 234 Teheran-ro, Gangnam-Gu, Seoul, 135-080, Korea
Tel: +82-2-558-3737, Fax: +82-2-558-5141

© 2016 Renesas Electronics Corporation. All rights reserved.
Colophon 5.0