REV	ECO#	DESCRIPTION	DATE

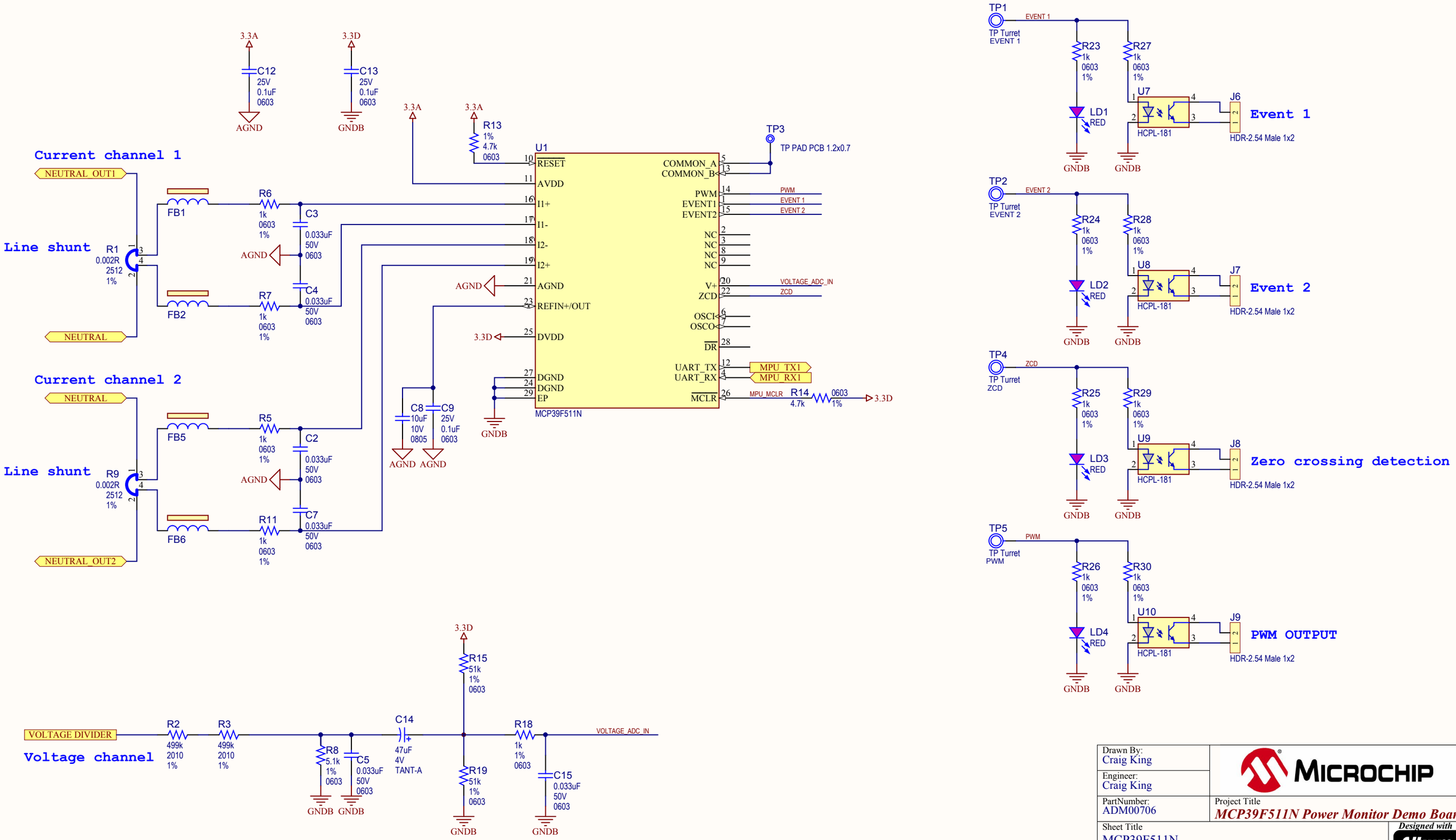

Drawn By: Craig King

Engineer: Craig King

PartNumber: ADM00706

Project Title: *MCP39F511N Power Monitor Demo Board*

Sheet Title: MCP39F511N

Size: B | Sch #:03-10480 | Revision: 1.1 | Date: 12/11/2015 11:00:50 AM | Sheet 1 of 3

File: D01-MCP39F511N.SchDoc

Designed with Altium — Altium.com

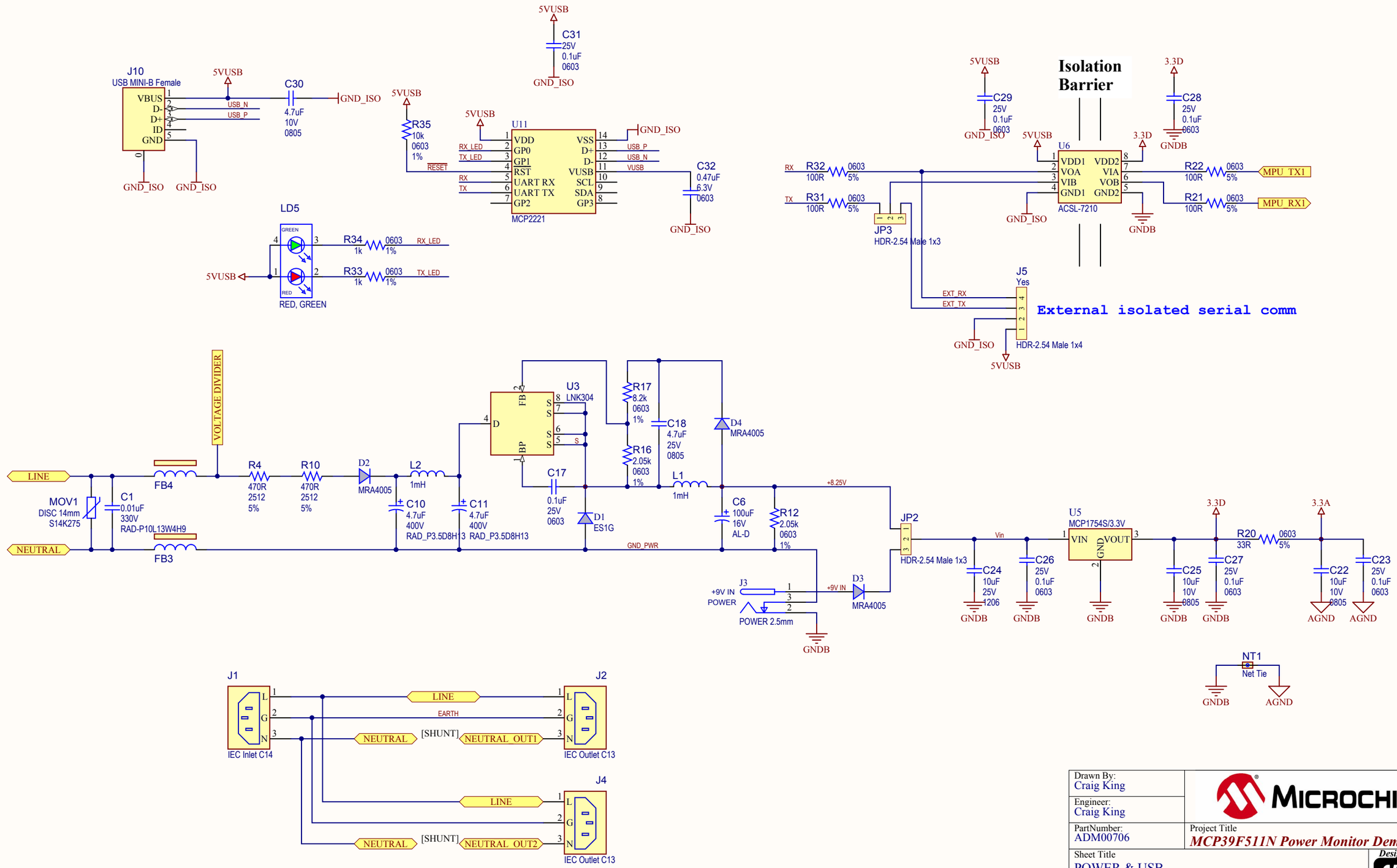

Drawn By: Craig King	MICROCHIP
Engineer: Craig King	
PartNumber: ADM00706	Project Title: *MCP39F511N Power Monitor Demo Board*
Sheet Title: POWER & USB	Designed with Altium — Altium.com
Size: B — Sch #:03-10480 — Revision: 1.1	Date: 12/11/2015 11:00:50 AM — Sheet 2 of 3
File: D02-MCP39F511N POWER & USB.SchDoc	

LABEL1

LABEL2

HIGH VOLTAGE

JP4 JP5

Shunt 2.54mm 1x2 Handle

SCR1 SCR2 SCR3 SCR4 SCR5 SCR6

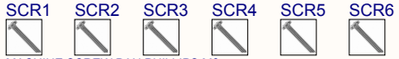

MACHINE SCREW PAN PHILLIPS M3

NUT1 NUT2 NUT3 NUT4 NUT5 NUT6

HEX NUT 0.217" STEEL M3

ENCLOSURE1

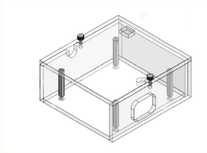

Energy Meter Enclosure

CBL1

USB-A Male to Mini USB-B Male

CBL2

IEC320C14 TO NEMA 5-15R

CBL3

IEC320C14 TO NEMA 5-15R

CBL4

NEMA 5-15P to IEC320C13

Drawn By: Craig King	MICROCHIP
Engineer: Craig King	
PartNumber: ADM00706	Project Title: *MCP39F511N Power Monitor Demo Board*
Sheet Title: Mechanical	Designed with Altium
Size: B / Sch #:03-10480 / Revision: 1.1	Date: 12/11/2015 11:00:51 AM / Sheet 3 of 3
File: D03 - Mechanical.SchDoc	Altium.com