REV	Description	DATE	BY
v1.0	Initial Version	2018.08.30	weifeng
v1.1	change product name	2018.09.07	weifeng

Seeed Studio

TITLE: High Accuracy Pi RTC(DS3231)

CC-BY-SA

Design: | Check:

Date: 2018/9/7 11:38:47 | Vision: | Sheet: 1/1

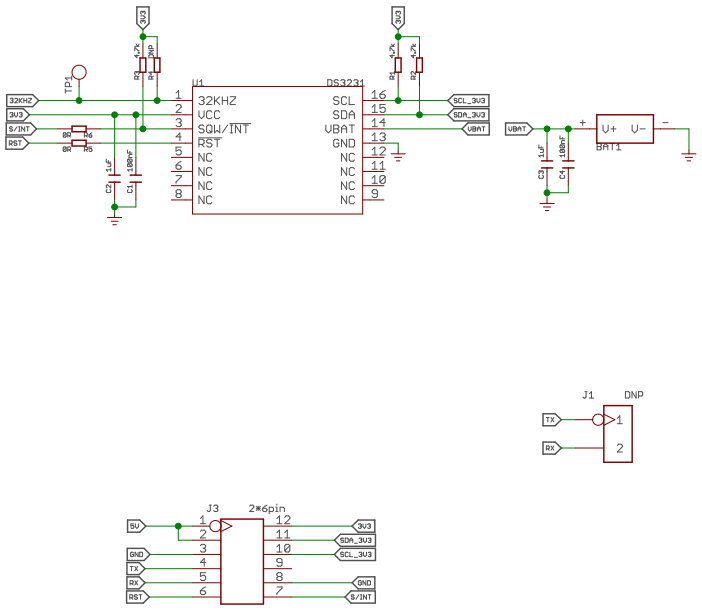

Seeed Studio

TITLE:

CC-BY-SA

Design: | Check:

Date: 2018/9/7 11:38:47 | Vision: | Sheet: 1/1