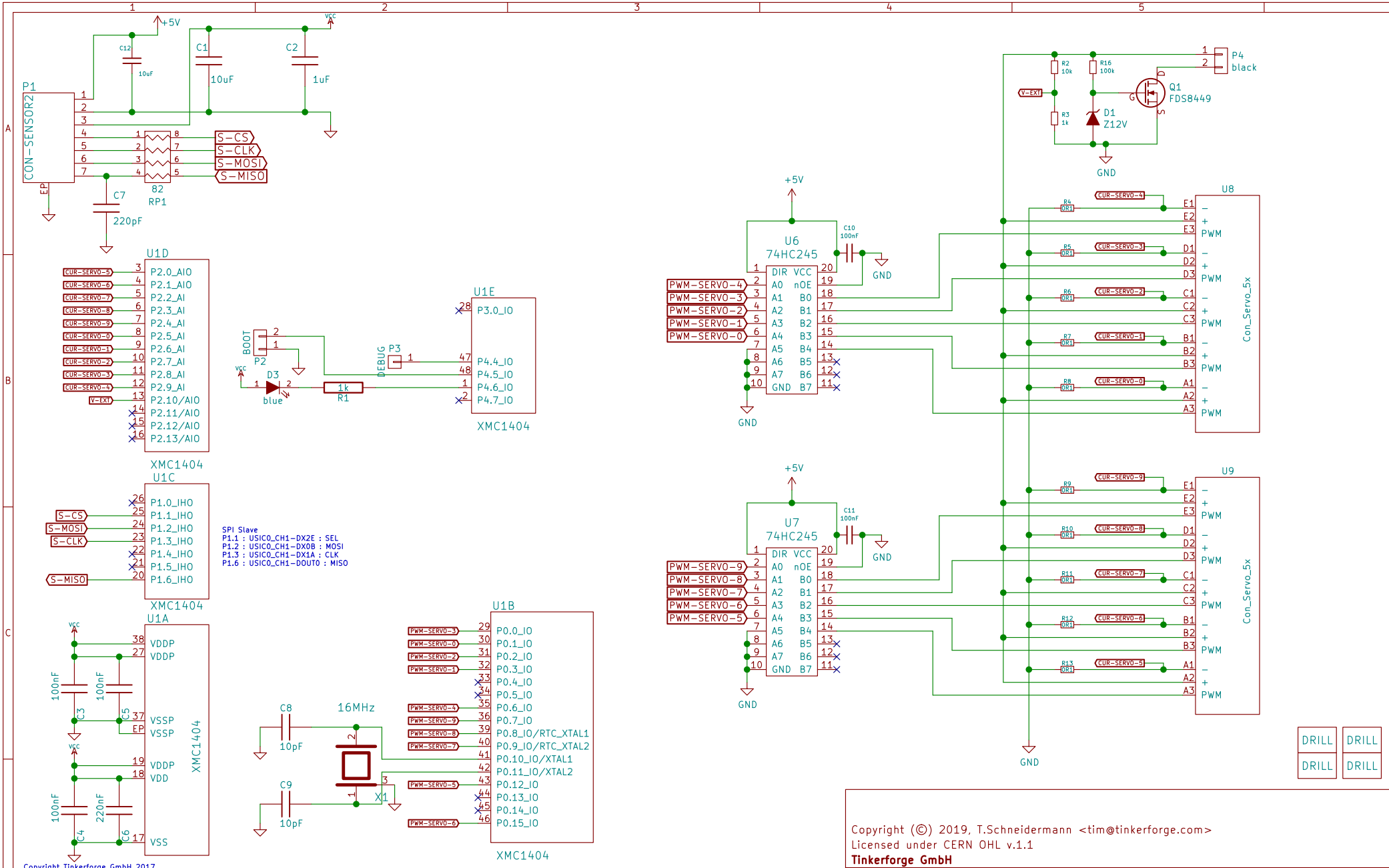

Copyright Tinkerforge GmbH 2017.
This documentation describes Open Hardware and is licensed under the CERN OHL v. 1.1.
You may redistribute and modify this documentation under the terms of the CERN OHL v.1.1. (http://ohwr.org/cernohl). This documentation is distributed WITHOUT ANY EXPRESS OR IMPLIED WARRANTY, INCLUDING OF MERCHANTABILITY, SATISFACTORY QUALITY AND FITNESS FOR A PARTICULAR PURPOSE. Please see the CERN OHL v.1.1 for applicable conditions

TSX-3225 16.0000MF18X-AC0
no C – 1.00017
3pF – 1.00008
4.7pF – 1.00005
9pF – 1.00001
10pF – 1.00000MHz

Copyright (©) 2019, T.Schneidermann <tim@tinkerforge.com>
Licensed under CERN OHL v.1.1
Tinkerforge GmbH

Sheet: /
File: servo.sch

Title: Servo Bricklet

Size: A4	Date: 2019-06-17	**Rev: 1.0**
KiCad E.D.A. kicad 5.1.10-88a1d61d5888ubuntu20.04.1		Id: 1/1