Private LoRa® Stack

# Reference Guide

## Introduction

This application note describes information to use the Private LoRa® stack and its APIs.

## Target Device

MCU: Renesas RL78/G23 (R7F100GSN, R7F100GLG), RL78/G14 (R5F104ML), RL78/G22 (R7F102GGE), RA2E1 (R7FA2E1A9xxFM), RA2L1 (R7FA2L1AB2DFP) or RA0E1 (R7FA0E1073CFJ)
Transceiver: Semtech SX1261 or SX1262

## Contents


1. Overview ..... 3
1.1 Private LoRa Stack Block Diagram ..... 3
1.2 Directories (informative) ..... 3
1.3 Resource Usage Example ..... 4
1.4 Acronyms and Abbreviations ..... 4
1.5 Related Documentation ..... 4

2. Private LoRa Interface ..... 5
2.1 Macros ..... 5
2.1.1 Stack Settings ..... 5
2.1.2 Configuration ..... 5
2.2 Enumerations ..... 6
2.2.1 PrvLoRaRegion_t ..... 6
2.2.2 PrvLoRaStatus_t ..... 6
2.2.3 PrvLoRaEventInfoStatus_t ..... 7
2.2.4 PrvLoRaIb_t ..... 7
2.2.5 PrvLoRaMlme_t ..... 10
2.2.6 PrvLoRaNotifyId_t ..... 10
2.3 Structure Types ..... 11
2.3.1 PrvLoRaIbRequest_t ..... 11
2.3.2 PrvLoRaTxOptions_t ..... 12
2.3.3 PrvLoRaMcpsReq_t ..... 12
2.3.4 PrvLoRaMcpsCfm_t ..... 12
2.3.5 PrvLoRaMcpsInd_t ..... 13
2.3.6 PrvLoRaMlmeReq_t ..... 13
2.3.7 PrvLoRaMlmeKeyReq_t ..... 13
2.3.8 PrvLoRaMlmeDevInfoReq_t ..... 14
2.3.9 PrvLoRaMlmeTxCycleReq_t ..... 14
2.3.10 PrvLoRaMlmeCfm_t ..... 14
2.3.11 LoRaMlmeKeyCfm_t ..... 14

2.3.12 PrvLoRaMlmeDevInfoCfm_t ..... 15
2.3.13 PrvLoRaMlmeTxCycleCfm_t ..... 15
2.3.14 PrvLoRaMlmeInd_t ..... 15
2.3.15 PrvLoRaMlmeKeyInd_t ..... 15
2.3.16 PrvLoRaMlmeTxCycleInd_t ..... 16
2.4 Private LoRa APIs ..... 17
2.4.1 PrivateLoRaInitialization ..... 17
2.4.2 PrivateLoRaStart ..... 18
2.4.3 PrivateLoRaStop ..... 18
2.4.4 PrivateLoRaProcess ..... 18
2.4.5 PrivateLoRaGetRequest ..... 19
2.4.6 PrivateLoRaSetRequest ..... 19
2.4.7 PrivateLoRaRegisterRemoteDevice ..... 20
2.4.8 PrivateLoRaUnregisterRemoteDevice ..... 20
2.4.9 PrivateLoRaMcpsRequest ..... 21
2.4.10 PrivateLoRaMlmeRequest ..... 22
2.5 Private LoRa Primitive Callback Handler (LoRaMacPrimitives_t) ..... 24
2.5.1 PrvLoRaMacMcpsConfirm ..... 24
2.5.2 PrvLoRaMacMcpsIndication ..... 24
2.5.3 PrvLoRaMacMlmeConfirm ..... 24
2.5.4 PrvLoRaMacMlmeIndication ..... 25
2.5.5 PrvLoRaMacNotification ..... 25

3. Timer ..... 26

4. Power Saving ..... 26
4.1 PrivateLoRaSetLowPower ..... 26

5. Sample Code (Informative) ..... 27
5.1 Initialize and Start the Private LoRa ..... 27
5.2 Set Private LoRa IB Parameters ..... 27
5.3 Get Private LoRa IB Parameters ..... 28
5.4 Remote Device Registration for Communication ..... 28
5.5 Send Data ..... 29
5.6 Send Command ..... 29

Revision History ..... 30

# 1. Overview

This application note contains API references and other information to use the Private LoRa stack.
The Private LoRa interfaces are described in chapter 2. The Timer interface is described in chapter 3.
Application can also use Timer APIs, although they are used in the stack.

## 1.1 Private LoRa Stack Block Diagram

Figure 1 shows a block diagram of the Private LoRa Stack.

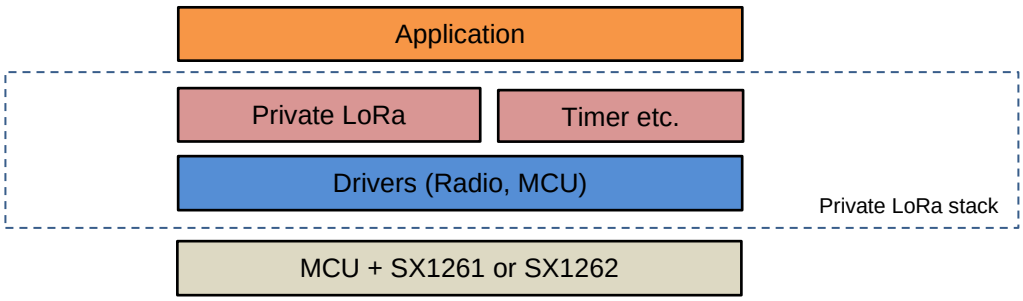


Note: This document covers Private LoRa MAC and Timer.

**Figure 1. Private LoRa Stack Block Diagram**

## 1.2 Directories (informative)

Table 1 shows a basic concept of what kind of codes each directory includes. This is just informative.

**Table 1. Directories**

| Directories | Description |
|---|---|
| `apps` | Application code |
| `boards` | Board specific codes |
| `boards/mcu` | MCU drivers |
| `prvloramac` | Private LoRa stack |
| `radio` | Radio driver for LoRa® |
| `peripherals` | Security related codes |
| `system` | Utility APIs, and so forth. |

## 1.3 Resource Usage Example

Please refer to [3] for RL78 and [4] for RA in the following folder for the resource usage such as memory and peripherals.

Folder: `(package top)\documents\`

## 1.4 Acronyms and Abbreviations

**Table 2. Acronyms and Abbreviations**

| Acronyms | Description |
|---|---|
| MCPS | MAC Common Part Sublayer |
| MLME | MAC Layer Management Entity |
| PSK | Pre-Shared Key |
| RFU | Reserved for Future Use |
| DR | Data rate |
| SF | Spreading factor |
| BW | Modulation bandwidth |
| AS1 | Composed of Asia countries having available frequencies in the 915-928 MHz range |
| AS2 | Composed of Asia countries having available frequencies in the 920-923 MHz range |
| AS3 | Composed of Asia countries having available frequencies in the 915-921 MHz range |
| AS4 | Composed of Asia countries having available frequencies in the 917-920 MHz range |
| JP | Perform ARIB STD-T108 regulation for using in Japan (without low duty cycle method) |
| JP-LDC | Perform ARIB STD-T108 regulation for using in Japan (with low duty cycle method) |
| EU | EU863-870 MHz Band |
| US | US902-928 MHz ISM Band |
| IN | IN865-867 MHz Band |
| AU | AU915-928 MHz Band |
| KR | KR920-923 MHz Band |

## 1.5 Related Documentation

| | Document No. | Title | Author | Language |
|---|---|---|---|---|
| [1] | R11AN0227 | Radio Driver Reference Guide | Renesas Electronics | English |
| [2] | R11AN0834 | Radio Driver Support Functions for Regional Radio Regulations | Renesas Electronics | English |
| [3] | R11AN0595 | RL78/G23, RL78/G22, RL78/G14 LoRa®-based Wireless Software Package | Renesas Electronics | English |
| [4] | R11AN0596 | RA2E1, RA2L1, RA0E1 LoRa®-based Wireless Software Package | Renesas Electronics | English |

# 2. Private LoRa Interface

This section describes the Private LoRa stack interfaces.

## 2.1 Macros

This section includes the following enumeration types.

### 2.1.1 Stack Settings

This subsection defines stack configurations macros. Macros in this subsection need to be defined in the project build option.

**Table 3. Macros for Stack Setting**

| Macro | Description |
|---|---|
| PRIVATELORA_ENABLED | Enable Private LoRa feature. |
| RADIO_CFG_AS_ENABLED | Enable AS1, AS2, AS3, AS4, JP and JP-LDC feature. |
| RADIO_CFG_EU_ENABLED | Enable EU feature. |
| RADIO_CFG_US_ENABLED | Enable US feature. |
| RADIO_CFG_IN_ENABLED | Enable IN feature. |
| RADIO_CFG_AU_ENABLED | Enable AU feature. |
| RADIO_CFG_KR_ENABLED | Enable KR feature. |
| RP_USE_RADIO_CFG_CHECK | Enable the regulatory function for each region in Radio Driver. Refer to [2]. |

### 2.1.2 Configuration

Parameters available for configuration in the Private LoRa stack are defined in `PrivateLoRaConfig.h`.

**Table 4. Macros for Stack Configuration**

| Macro | Description | |
|---|---|---|
| PRVLORA_CONFIG_REMOTE_DEVICE_MAXNUM | **Type:** uint8_t (1 - 3) | Default: 1 |
| | Maximum number of remote devices.<br>Note: the maximum value for RL78/G22 is 1. | |
| PRVLORA_CONFIG_INDIRECT_TX_QUEUE_MAXNUM | **Type:** uint8_t (1 – 3) | Default: 1 |
| | Maximum number of the indirect transmission queue.<br>Note: the maximum value for RL78/G22 is 1.<br>Note: the maximum value depends on RAM. | |
| PRVLORA_CONFIG_SYSTEM_MAX_RX_ERROR | **Type:** uint32_t | Default:<br>(RL78) 35 (RA2) 35 (RA0) 35 |
| | System overall timing error in msec. | |
| PRVLORA_CONFIG_TRXADJUST_TX2RX | **Type:** uint32_t | Default:<br>(RL78) 7 (RA2) 10 (RA0) 7 |
| | Processing time from completion of transmission to start of reception.<br>It is used to fine-tune the start timing of reception. | |
| PRVLORA_CONFIG_TRXADJUST_RX2TXRES_FIXED | **Type:** uint32_t | Default:<br>(RL78) 9 (RA2) 11 (RA0) 8 |
| | Processing time from completion of reception to just before starting response transmission.<br>It is used to fine-tune the start timing of transmission. | |

## 2.2 Enumerations

This section includes the following enumeration types.

**Table 5. Enumerations**

| Types | Description |
|---|---|
| PrvLoRaRegion_t | Region and band. |
| PrvLoRaStatus_t | The status of the requested Private LoRa services. |
| PrvLoRaEventInfoStatus_t | The status of the events of the Private LoRa services. |
| PrvLoRaIb_t | Private LoRa Information Base (IB) type |
| PrvLoRaMlme_t | Private LoRa management service type. |
| PrvLoRaNotifyId_t | Private LoRa notification type. |

### 2.2.1 PrvLoRaRegion_t

This enumeration type contains the following MAC region and frequency bands.

**Table 6. PrvLoRaRegion_t**

| Enumerator | Description |
|---|---|
| PRVLORA_REGION_EU | Europe, band 868 MHz |
| PRVLORA_REGION_IN | India, band 865 MHz |
| PRVLORA_REGION_AS1 | Asia, band 915-928 MHz |
| PRVLORA_REGION_AS2 | Asia, band 920-923 MHz |
| PRVLORA_REGION_AS3 | Asia, band 915-921 MHz |
| PRVLORA_REGION_AS4 | Asia, band 917-920 MHz |
| PRVLORA_REGION_US | North America, band 915 MHz |
| PRVLORA_REGION_AU | Australia, band 915 MHz |
| PRVLORA_REGION_KR | South Korea, band 920 MHz |
| PRVLORA_REGION_JP | Japan, ARIB STD-T108 regulation (without low duty cycle method) |
| PRVLORA_REGION_JP_LDC | Japan, ARIB STD-T108 regulation (with low duty cycle method) |

### 2.2.2 PrvLoRaStatus_t

This enumeration type contains Private LoRa status and indicates the result of requested Private LoRa service as follows.

**Table 7. PrvLoRaStatus_t**

| Enumerator | Description |
|---|---|
| PRVLORA_STATUS_OK | Service started successfully. |
| PRVLORA_STATUS_ERROR | Error - Undefined error. |
| PRVLORA_STATUS_BUSY | Error - Processing request. |
| PRVLORA_STATUS_INACTIVE | Error - Private LoRa is inactive. |
| PRVLORA_STATUS_PARAMETER_INVALID | Error - Invalid parameter. |
| PRVLORA_STATUS_REQUSET_INVALID | Error - Invalid request. |
| PRVLORA_STATUS_NO_ REMOTE_DEVICE_ENTRY | Error - Remote device entry is not found. |
| PRVLORA_STATUS_NOT_SUPPORTED | Error - Request is not supported. |
| PRVLORA_STATUS_SERVICE_UNKNOWN | Error - Unknown request. |
| PRVLORA_STATUS_IB_ATTRIBUTE_INVALID | Error - Invalid access to specified IB. |
| PRVLORA_STATUS_LENGTH_ERROR | Error - Payload length is too long. |
| PRVLORA_STATUS_COMMAND_ERROR | Error - Command error. |
| PRVLORA_STATUS_INSUFFICIENT_MEMORY | Error - Insufficient memory. |
| PRVLORA_STATUS_DATARATE_INVALID | Error - Invalid data rate. |

| | |
|---|---|
| PRVLORA_STATUS_CHANNEL_INVALID | Error - Invalid channel. |
| PRVLORA_STATUS_RADIO_ERROR | Error - Radio driver initialization failure. |
| PRVLORA_STATUS_RADIO_CHANNEL_BUSY | Error - Channel is busy. |
| PRVLORA_STATUS_RADIO_DUTYCYCLE_RESTRICTED | Error - Transmission was aborted due to duty cycle restriction. |
| PRVLORA_STATUS_RADIO_PARAMETER_INVALID | Error - Radio parameter configuration is invalid. |

### 2.2.3 PrvLoRaEventInfoStatus_t

This enumeration type contains the status of the operation of a Private LoRa service as follows.

**Table 8. PrvLoRaEventInfoStatus_t**

| Enumerator | Description |
|---|---|
| PRVLORA_EVENTINFO_STATUS_OK | Service performed successfully. |
| PRVLORA_EVENTINFO_STATUS_ERROR | An error occurred during the execution of the service. |
| PRVLORA_EVENTINFO_STATUS_TX_TIMEOUT | A Tx timeout occurred. |
| PRVLORA_EVENTINFO_STATUS_TX_NOACK | ACK frame from remote device cannot be received. |
| PRVLORA_EVENTINFO_STATUS_TX_CANCELED | Tx request has been canceled. |
| PRVLORA_EVENTINFO_STATUS_TX_CHANNELBUSY | No free channel found by carrier sense. |
| PRVLORA_EVENTINFO_STATUS_TX_DUTYCYCLE_RESTRICTED | Transmission was aborted due to duty cycle restriction. |
| PRVLORA_EVENTINFO_STATUS_TX_RADIO_ERROR | Radio parameter is not supported. |
| PRVLORA_EVENTINFO_STATUS_KEYREQ_FAILED | An error occurred in the KeyReq procedure. |

### 2.2.4 PrvLoRaIb_t

This enumeration type contains the information on the following Private LoRa Information Base (IB). These are used to get or to set the parameters in Private LoRa stack.

**Table 9. PrvLoRaIb_t**

| Enumerator | Description |
|---|---|
| PRVLORA_IB_MACADDR | MAC address. |
| PRVLORA_IB_CHANNEL_ID | Channel ID to decide frequency.<br>See below for the detail. |
| PRVLORA_IB_DR | Data rate ID to decide data rate.<br>See below for the detail. |
| PRVLORA_IB_TXPOWER | Transmission power. |
| PRVLORA_IB_RXONWHENIDLE | Enable/disable reception in the idle state. |
| PRVLORA_IB_KEYREQ_PERMIT | Accept/reject `KeyReq` command frame. |
| PRVLORA_IB_TXCYCLE_TIME | Tx cycle information. |
| PRVLORA_IB_RADIO_CFG_CHECK_ENABLE | Enable/disable the regulatory function for each region in Radio Driver. |

Available data rate IDs and channel IDs are defined for each region.

**Table 10. Available Data Rate ID and Channel ID (AS1)**

| Data Rate ID | Configuration | Indicative physical bit rate | Channel ID | Frequency (MHz) | Steps (kHz) |
|---|---|---|---|---|---|
| 0 | LoRa®: SF12 - BW125 kHz | 250 bps | 0 - 63 | 915.2 - 927.8 | 200 |
| 1 | LoRa®: SF11 - BW125 kHz | 440 bps | 0 - 63 | 915.2 - 927.8 | 200 |
| 2 | LoRa®: SF10 - BW125 kHz | 980 bps | 0 - 63 | 915.2 - 927.8 | 200 |
| 3 | LoRa®: SF9 - BW125 kHz | 1760 bps | 0 - 63 | 915.2 - 927.8 | 200 |
| 4 | LoRa®: SF8 - BW125 kHz | 3125 bps | 0 - 63 | 915.2 - 927.8 | 200 |
| 5 | LoRa®: SF7 - BW125 kHz | 5470 bps | 0 - 63 | 915.2 - 927.8 | 200 |
| 6 | LoRa®: SF7 - BW250 kHz | 11000 bps | 0 - 31 | 915.3 - 927.7 | 400 |
| 7 | FSK | 50 kbps | 0 - 63 | 915.2 - 927.8 | 200 |

**Table 11. Available Data Rate ID and Channel ID (AS2)**

| Data Rate ID | Configuration | Indicative physical bit rate | Channel ID | Frequency (MHz) | Steps (kHz) |
|---|---|---|---|---|---|
| 0 | LoRa®: SF12 - BW125 kHz | 250 bps | 0 - 13 | 920.2 - 922.8 | 200 |
| 1 | LoRa®: SF11 - BW125 kHz | 440 bps | 0 - 13 | 920.2 - 922.8 | 200 |
| 2 | LoRa®: SF10 - BW125 kHz | 980 bps | 0 - 13 | 920.2 - 922.8 | 200 |
| 3 | LoRa®: SF9 - BW125 kHz | 1760 bps | 0 - 13 | 920.2 - 922.8 | 200 |
| 4 | LoRa®: SF8 - BW125 kHz | 3125 bps | 0 - 13 | 920.2 - 922.8 | 200 |
| 5 | LoRa®: SF7 - BW125 kHz | 5470 bps | 0 - 13 | 920.2 - 922.8 | 200 |
| 6 | LoRa®: SF7 - BW250 kHz | 11000 bps | 0 - 5 | 920.5 - 922.5 | 400 |
| 7 | FSK | 50 kbps | 0 - 13 | 920.2 - 922.8 | 200 |

**Table 12. Available Data Rate ID and Channel ID (AS3)**

| Data Rate ID | Configuration | Indicative physical bit rate | Channel ID | Frequency (MHz) | Steps (kHz) |
|---|---|---|---|---|---|
| 0 | LoRa®: SF12 - BW125 kHz | 250 bps | 0 - 28 | 915.2 - 920.8 | 200 |
| 1 | LoRa®: SF11 - BW125 kHz | 440 bps | 0 - 28 | 915.2 - 920.8 | 200 |
| 2 | LoRa®: SF10 - BW125 kHz | 980 bps | 0 - 28 | 915.2 - 920.8 | 200 |
| 3 | LoRa®: SF9 - BW125 kHz | 1760 bps | 0 - 28 | 915.2 - 920.8 | 200 |
| 4 | LoRa®: SF8 - BW125 kHz | 3125 bps | 0 - 28 | 915.2 - 920.8 | 200 |
| 5 | LoRa®: SF7 - BW125 kHz | 5470 bps | 0 - 28 | 915.2 - 920.8 | 200 |
| 6 | LoRa®: SF7 - BW250 kHz | 11000 bps | 0 - 13 | 915.3 - 920.5 | 400 |
| 7 | FSK | 50 kbps | 0 - 28 | 915.2 - 920.8 | 200 |

**Table 13. Available Data Rate ID and Channel ID (AS4)**

| Data Rate ID | Configuration | Indicative physical bit rate | Channel ID | Frequency (MHz) | Steps (kHz) |
|---|---|---|---|---|---|
| 0 | LoRa®: SF12 - BW125 kHz | 250 bps | 0 - 14 | 917.1 - 919.9 | 200 |
| 1 | LoRa®: SF11 - BW125 kHz | 440 bps | 0 - 14 | 917.1 - 919.9 | 200 |
| 2 | LoRa®: SF10 - BW125 kHz | 980 bps | 0 - 14 | 917.1 - 919.9 | 200 |
| 3 | LoRa®: SF9 - BW125 kHz | 1760 bps | 0 - 14 | 917.1 - 919.9 | 200 |
| 4 | LoRa®: SF8 - BW125 kHz | 3125 bps | 0 - 14 | 917.1 - 919.9 | 200 |
| 5 | LoRa®: SF7 - BW125 kHz | 5470 bps | 0 - 14 | 917.1 - 919.9 | 200 |
| 6 | LoRa®: SF7 - BW250 kHz | 11000 bps | 0 - 6 | 917.3 - 919.7 | 400 |
| 7 | FSK | 50 kbps | 0 - 14 | 917.1 - 919.9 | 200 |

**Table 14. Available Data Rate ID and Channel ID (JP)**

| Data Rate ID | Configuration | Indicative physical bit rate | Channel ID | Frequency (MHz) | Steps (kHz) |
|---|---|---|---|---|---|
| 0 | LoRa®: SF12 - BW125 kHz | 250 bps | 0 - 14 | 920.6 - 923.4 | 200 |
| 1 | LoRa®: SF11 - BW125 kHz | 440 bps | 0 - 14 | 920.6 - 923.4 | 200 |
| 2 | LoRa®: SF10 - BW125 kHz | 980 bps | 0 - 14 | 920.6 - 923.4 | 200 |
| 3 | LoRa®: SF9 - BW125 kHz | 1760 bps | 0 - 14 | 920.6 - 923.4 | 200 |
| 4 | LoRa®: SF8 - BW125 kHz | 3125 bps | 0 - 37 | 920.6 - 928.0 | 200 |
| 5 | LoRa®: SF7 - BW125 kHz | 5470 bps | 0 - 37 | 920.6 - 928.0 | 200 |
| 6 | LoRa®: SF7 - BW250 kHz | 11000 bps | 0 - 3 | 920.7 - 921.9 | 400 |
| 7 | LoRa®: SF7 - BW250 kHz | 11000 bps | 0 - 13 | 922.7 - 927.9 | 400 |
| 8 | LoRa®: SF7 - BW250 kHz | 11000 bps | 0 - 18 | 920.9 - 928.1 | 400 |
| 9 | FSK | 50 kbps | 0 - 37 | 920.6 - 928.0 | 200 |

**Table 15. Available Data Rate ID and Channel ID (JP-LDC)**

| Data Rate ID | Configuration | Indicative physical bit rate | Channel ID | Frequency (MHz) | Steps (kHz) |
|---|---|---|---|---|---|
| 0 | LoRa®: SF12 - BW125 kHz | 250 bps | 0 - 14 | 920.6 - 923.4 | 200 |
| 1 | LoRa®: SF11 - BW125 kHz | 440 bps | 0 - 14 | 920.6 - 923.4 | 200 |
| 2 | LoRa®: SF10 - BW125 kHz | 980 bps | 0 - 14 | 920.6 - 923.4 | 200 |
| 3 | LoRa®: SF9 - BW125 kHz | 1760 bps | 0 - 14 | 920.6 - 923.4 | 200 |
| 4 | LoRa®: SF8 - BW125 kHz | 3125 bps | 0 - 14 | 920.6 - 923.4 | 200 |
| 5 | LoRa®: SF7 - BW125 kHz | 5470 bps | 0 - 14 | 920.6 - 923.4 | 200 |
| 6 | FSK | 50 kbps | 0 - 14 | 920.6 - 923.4 | 200 |

**Table 16. Available Data Rate ID and Channel ID (EU)**

| Data Rate ID | Configuration | Indicative physical bit rate | Channel ID | Frequency (MHz) | Steps (kHz) |
|---|---|---|---|---|---|
| 0 | LoRa®: SF12 - BW125 kHz | 250 bps | 0 - 27 | 863.1 - 868.5 | 200 |
| 1 | LoRa®: SF11 - BW125 kHz | 440 bps | 0 - 27 | 863.1 - 868.5 | 200 |
| 2 | LoRa®: SF10 - BW125 kHz | 980 bps | 0 - 27 | 863.1 - 868.5 | 200 |
| 3 | LoRa®: SF9 - BW125 kHz | 1760 bps | 0 - 27 | 863.1 - 868.5 | 200 |
| 4 | LoRa®: SF8 - BW125 kHz | 3125 bps | 0 - 27 | 863.1 - 868.5 | 200 |
| 5 | LoRa®: SF7 - BW125 kHz | 5470 bps | 0 - 27 | 863.1 - 868.5 | 200 |
| 6 | LoRa®: SF7 - BW250 kHz | 11000 bps | 0 - 11 | 863.2 - 867.6 | 400 |
| 7 | FSK | 50 kbps | 0 - 27 | 863.1 - 868.5 | 200 |

**Table 17. Available Data Rate ID and Channel ID (US)**

| Data Rate ID | Configuration | Indicative physical bit rate | Channel ID | Frequency (MHz) | Steps (kHz) |
|---|---|---|---|---|---|
| 0 | LoRa®: SF8 - BW125 kHz | 3125 bps | 0 - 41 | 920.9 - 927.5 | 600 |

**Table 18. Available Data Rate ID and Channel ID (AU)**

| Data Rate ID | Configuration | Indicative physical bit rate | Channel ID | Frequency (MHz) | Steps (kHz) |
|---|---|---|---|---|---|
| 0 | LoRa®: SF8 - BW125 kHz | 3125 bps | 0 - 21 | 915.5 - 928.1 | 600 |

**Table 19. Available Data Rate ID and Channel ID (IN)**

| Data Rate ID | Configuration | Indicative physical bit rate | Channel ID | Frequency (MHz) | Steps (kHz) |
|---|---|---|---|---|---|
| 0 | LoRa®: SF12 - BW125 kHz | 250 bps | 0 - 14 | 865.1 - 867.9 | 200 |
| 1 | LoRa®: SF11 - BW125 kHz | 440 bps | 0 - 14 | 865.1 - 867.9 | 200 |
| 2 | LoRa®: SF10 - BW125 kHz | 980 bps | 0 - 14 | 865.1 - 867.9 | 200 |
| 3 | LoRa®: SF9 - BW125 kHz | 1760 bps | 0 - 14 | 865.1 - 867.9 | 200 |
| 4 | LoRa®: SF8 - BW125 kHz | 3125 bps | 0 - 14 | 865.1 - 867.9 | 200 |
| 5 | LoRa®: SF7 - BW125 kHz | 5470 bps | 0 - 14 | 865.1 - 867.9 | 200 |
| 6 | FSK | 50 kbps | 0 - 14 | 865.1 - 867.9 | 200 |

**Table 20. Available Data Rate ID and Channel ID (KR)**

| Data Rate ID | Configuration | Indicative physical bit rate | Channel ID | Frequency (MHz) | Steps (kHz) |
|---|---|---|---|---|---|
| 0 | LoRa®: SF12 - BW125 kHz | 250 bps | 0 - 14 | 865.1 - 867.9 | 200 |
| 1 | LoRa®: SF11 - BW125 kHz | 440 bps | 0 - 14 | 865.1 - 867.9 | 200 |
| 2 | LoRa®: SF10 - BW125 kHz | 980 bps | 0 - 14 | 865.1 - 867.9 | 200 |
| 3 | LoRa®: SF9 - BW125 kHz | 1760 bps | 0 - 14 | 865.1 - 867.9 | 200 |
| 4 | LoRa®: SF8 - BW125 kHz | 3125 bps | 0 - 14 | 865.1 - 867.9 | 200 |
| 5 | LoRa®: SF7 - BW125 kHz | 5470 bps | 0 - 14 | 865.1 - 867.9 | 200 |
| 6 | FSK | 50 kbps | 0 - 14 | 865.1 - 867.9 | 200 |

### 2.2.5 PrvLoRaMlme_t

This enumeration type contains the following Private LoRa management services.

**Table 21. PrvLoRaMlme_t**

| Enumerator | Description |
|---|---|
| PRVLORA_MLME_KEY | Issues MAC command `KeyReq` to exchange the session key. |
| PRVLORA_MLME_DEVINFO | Issues MAC command `DevInfoReq` to get the remote device information. |
| PRVLORA_MLME_TXCYCLE | Issues MAC command `TxCycleReq` to request cyclic transmission to the remote device. |

### 2.2.6 PrvLoRaNotifyId_t

This enumeration type contains the following Private LoRa notification type.

**Table 22. PrvLoRaMlme_t**

| Enumerator | Description |
|---|---|
| PRVLORA_NOTIFY_UPDATE_REMOTEDEV | Remote device information is updated. |

## 2.3 Structure Types

This section describes the following types.

**Table 23. Structure Types**

| Types | Description |
|---|---|
| PrvLoRaIbRequest_t | Private LoRa IB parameters. |
| PrvLoRaTxOptions_t | Transmit options. |
| PrvLoRaMcpsReq_t | MCPS-Request primitive. |
| PrvLoRaMcpsCfm_t | MCPS-Confirm primitive. |
| PrvLoRaMcpsInd_t | MCPS-Indication primitive. |
| PrvLoRaMlmeReq_t | MLME-Request primitive. |
| PrvLoRaMlmeKeyReq_t | MLME-Request primitive - PRVLORA_MLME_KEY. |
| PrvLoRaMlmeDevInfoReq_t | MLME-Request primitive - PRVLORA_MLME_DEVINFO. |
| PrvLoRaMlmeTxCycleReq_t | MLME-Request primitive - PRVLORA_MLME_TXCYCLE. |
| PrvLoRaMlmeCfm_t | MLME-Confirm primitive. |
| PrvLoRaMlmeKeyCfm_t | MLME-Confirm primitive - PRVLORA_MLME_KEY. |
| PrvLoRaMlmeDevInfoCfm_t | MLME-Confirm primitive - PRVLORA_MLME_DEVINFO. |
| PrvLoRaMlmeTxCycleCfm_t | MLME-Confirm primitive - PRVLORA_MLME_TXCYCLE. |
| PrvLoRaMlmeInd_t | MLME-Indication primitive |
| PrvLoRaMlmeKeyInd_t | MLME-Indication primitive - PRVLORA_MLME_KEY |
| PrvLoRaMlmeTxCycleInd_t | MLME-Indication primitive - PRVLORA_MLME_TXCYCLE |
| PrvLoRaNotification_t | Private LoRa notification |
| PrvLoRaNotifyUpdatedRemoteDev_t | Private LoRa notification - PRVLORA_NOTIFY_UPDATE_REMOTEDEV |

### 2.3.1 PrvLoRaIbRequest_t

This union type contains Private LoRa IB parameters. Each member type is a data structure for Private LoRa IB listed in 'PrvLoRaIb_t' enumeration.

**Table 24. PrvLoRaIbRequest_t (union)**

| Member type | Member | Description | |
|---|---|---|---|
| uint8_t | macAddr[ 8 ] | [ PRVLORA_IB_MACADDR ]<br>MAC address. | |
| uint8_t | channelId | [ PRVLORA_IB_CHANNEL_ID ]<br>Channel ID to decide frequency.<br>Available channel ID and actual frequencies are defined for each region. See 2.2.4. | |
| uint8_t | drIndex | [ PRVLORA_IB_DR ]<br>Data rate ID to decide data rate.<br>Available data rate is defined for each region. See 2.2.4. | |
| int8_t | txPower | [ PRVLORA_IB_TXPOWER ]<br>transmission power in dB.<br>Range: -128 - 127<br>Actual transmit power is determined by the regulation of each region and/or ability of the transceiver. | |
| bool | rxOnWhenIdle | [PRVLORA_IB_RXONWHENIDLE]<br>Enable/disable reception in the idle state. | |
| | | true | Enable reception. |
| | | false | Disable reception. |

| | | | |
|---|---|---|---|
| bool | keyReqPermit | [PRVLORA_IB_KEYREQ_PERMIT]<br>Accept/reject `KeyReq` command frame. | |
| | | true | Accept `KeyReq` command. |
| | | false | Reject `KeyReq` command. |
| PrvLoRaIbReqTxCycle_t | txCycle | [PRVLORA_IB_TXCYCLE_TIME]<br>Tx cycle information. | |
| | | uint8_t dstMacAddr[ 8 ] | Destination MAC address to send periodicity. |
| | | uint32_t txCycleTime | Periodic time in sec.<br>Range:<br>0, 10 - 131071 (0x1FFFF) |
| bool | radioCfgCheckEnable | [PRVLORA_IB_RADIO_CFG_CHECK_ENABLE]<br>Enable/disable the regulatory function for each region in Radio Driver. | |
| | | true | Enable the regulatory function. |
| | | false | Disable the regulatory function. |

### 2.3.2 PrvLoRaTxOptions_t

This union type contains information on Private LoRa transmit options.

**Table 25. PrvLoRaTxOptions_t (union)**

| Member type | Member | Description |
|---|---|---|
| uint8_t | txOptValue | 1Byte value of transmit options. |
| struct { | | (bit field) |
| uint8_t | AckRequest : 1 | Request ACK to the destination. |
| uint8_t | SecEnable : 1 | Encrypts data. |
| uint8_t | IndirectTx : 1 | Indirect transmission. |
| uint8_t | _reserved : 6 | RFU |
| } | options | |

### 2.3.3 PrvLoRaMcpsReq_t

This structure type contains information on Private LoRa MCPS-Request.

**Table 26. PrvLoRaMcpsReq_t**

| Member type | Member | Description |
|---|---|---|
| uint8_t | dstMacAddr[ 8 ] | Destination MAC address. |
| uint8_t | *p_txData | Pointer to the buffer of frame payload to send. |
| uint8_t | txDataSize | Size of frame payload to send. |
| uint16_t | txHandle | Handle value. |
| uint8_t | txOption | Transmit options. See 2.3.2. |

### 2.3.4 PrvLoRaMcpsCfm_t

This structure type contains information on Private LoRa MCPS-Confirm.

**Table 27. PrvLoRaMcpsCfm_t**

| Member type | Member | Description |
|---|---|---|
| PrvLoRaEventInfoStatus_t | eventStatus | Status of the operation. See 2.2.3. |
| uint16_t | txHandle | Handle value set for PrvLoRaMcpsReq_t. See 2.3.3. |

### 2.3.5 PrvLoRaMcpsInd_t

This structure type contains information on Private LoRa MCPS-Indication.

**Table 28. PrvLoRaMcpsInd_t**

| Member type | Member | Description |
|---|---|---|
| PrvLoRaEventInfoStatus_t | eventStatus | Status of the operation. See 2.2.3. |
| uint8_t | *p_srcMacAddr | Pointer to the buffer of source MAC address (8Byte). |
| uint8_t | *p_rxData | Pointer to the received data stream. |
| uint8_t | rxDataSize | Size of the received data stream. |
| int16_t | rssi | RSSI of the received packet. |
| int8_t | snr | SNR of the received packet. |
| bool | isAck | True if source device set ACK in the frame. |
| bool | isSecurity | True if the received frame is encrypted. |

### 2.3.6 PrvLoRaMlmeReq_t

This structure type contains information on Private LoRa MLME-Request.

**Table 29. PrvLoRaMlmeReq_t**

| Member type | Member | Description |
|---|---|---|
| PrvLoRaMlme_t | mlmeType | Type of Private LoRa management services.<br>See 2.2.5. |
| union { | | |
| PrvLoRaMlmeKeyReq_t | keyReq | PRVLORA_MLME_KEY.request parameters.<br>See 2.3.7. |
| PrvLoRaMlmeDevInfoReq_t | devInfoReq | PRVLORA_MLME_DEVINFO.request parameters.<br>See 0. |
| PrvLoRaMlmeTxCycleReq_t | txCycleReq | PRVLORA_MLME_TXCYCLE.request parameters.<br>See 2.3.9. |
| } | req | |

### 2.3.7 PrvLoRaMlmeKeyReq_t

This structure type contains information on Private LoRa MLME-Request to request session key to the destination.

**Table 30. PrvLoRaMlmeKeyReq_t**

| Member type | Member | Description |
|---|---|---|
| uint8_t | dstMacAddr[ 8 ] | MAC address of the destination. |
| PrvLoRaTxOptions_t | txOptions | Transmit options. See 2.3.2.<br>IndirectTx is available, others are ignored. |

### 2.3.8 PrvLoRaMlmeDevInfoReq_t

This structure type contains information on Private LoRa MLME-Request to request device information to the destination.

**Table 31. PrvLoRaMlmeDevInfoReq_t**

| Member type | Member | Description |
|---|---|---|
| uint8_t | dstMacAddr[ 8 ] | MAC address of the destination. |
| PrvLoRaTxOptions_t | txOptions | Transmit options. See 2.3.2.<br>SecEnable and IndirectTx are available, others are ignored. |

### 2.3.9 PrvLoRaMlmeTxCycleReq_t

This structure type contains information on Private LoRa MLME-Request to request cyclic transmission to the destination.

**Table 32. PrvLoRaMlmeTxCycleReq_t**

| Member type | Member | Description |
|---|---|---|
| uint8_t | dstMacAddr[ 8 ] | MAC address of the destination. |
| PrvLoRaTxOptions_t | txOptions | Transmit options. See 2.3.2.<br>SecEnable and IndirectTx are available, others are ignored. |
| uint32_t | txCycleTime | Periodicity in sec. (0, 10 - 0x0001FFFF) |

### 2.3.10 PrvLoRaMlmeCfm_t

This structure type contains information on Private LoRa MLME-Confirm primitive.

**Table 33. PrvLoRaMlmeCfm_t**

| Member type | Member | Description |
|---|---|---|
| PrvLoRaMlme_t | mlmeType | Type of Private LoRa management services.<br>See 2.2.5. |
| union { | | |
| PrvLoRaMlmeKeyCfm_t | keyCfm | PRVLORA_MLME_KEY.confirm parameters.<br>See 2.3.11. |
| PrvLoRaMlmeDevInfoCfm_t | devInfoCfm | PRVLORA_MLME_DEVINFO.confirm parameters.<br>See 2.3.12. |
| PrvLoRaMlmeTxCycleCfm_t | txCycleCfm | PRVLORA_MLME_TXCYCLE.confirm parameters.<br>See 2.3.13. |
| } | cfm | |

### 2.3.11 LoRaMlmeKeyCfm_t

This structure type contains information on Private LoRa MLME-Confirm to request session key to the destination.

**Table 34. PrvLoRaMlmeKeyCfm_t**

| Member type | Member | Description |
|---|---|---|
| PrvLoRaEventInfoStatus_t | status | Status of the operation. See 2.2.3. |
| uint8_t | dstMacAddr[ 8 ] | MAC address of the destination. |

### 2.3.12 PrvLoRaMlmeDevInfoCfm_t

This structure type contains information on Private LoRa MLME-Confirm to request device information to the destination.

**Table 35 PrvLoRaMlmeDevInfoCfm_t**

| Member type | Member | Description |
|---|---|---|
| PrvLoRaEventInfoStatus_t | status | Status of the operation. See 2.2.3. |
| uint8_t | snr | S/N ratio. |
| uint8_t | txPower | Transmission power. |
| uint32_t | txCycleTime | Periodicity of cyclic transmission. |

### 2.3.13 PrvLoRaMlmeTxCycleCfm_t

This structure type contains information on Private LoRa MLME-Confirm to request periodical transmission to the destination.

**Table 36 PrvLoRaMlmeTxCycleCfm_t**

| Member type | Member | Description |
|---|---|---|
| PrvLoRaEventInfoStatus_t | status | Status of the operation. See 2.2.3. |

### 2.3.14 PrvLoRaMlmeInd_t

This structure type contains information on Private LoRa MLME-Indication primitive.

**Table 37. PrvLoRaMlmeInd_t**

| Member type | Member | Description |
|---|---|---|
| PrvLoRaMlme_t | mlmeType | Type of Private LoRa management services.<br>See 2.2.5. |
| union { | | |
| PrvLoRaMlmeKeyInd_t | keyInd | PRVLORA_MLME_KEY.indiation parameters.<br>See 2.3.15. |
| PrvLoRaMlmeTxCycleInd_t | txCycleInd | PRVLORA_MLME_TXCYCLE.indication parameters.<br>See 2.3.16. |
| } | ind | |

### 2.3.15 PrvLoRaMlmeKeyInd_t

This structure type contains information on Private LoRa MLME-Indication when a remote device requests the exchange of session key.

**Table 38 PrvLoRaMlmeKeyInd_t**

| Member type | Member | Description |
|---|---|---|
| uint8_t | srcMacAddr[ 8 ] | MAC address of the remote device. |

### 2.3.16 PrvLoRaMlmeTxCycleInd_t

This structure type contains information on Private LoRa MLME-Indication when a remote device requests cyclic transmission.

**Table 39 PrvLoRaMlmeTxCycleInd_t**

| Member type | Member | Description |
|---|---|---|
| uint8_t | srcMacAddr[ 8 ] | MAC address of the remote device. |
| uint32_t | txCycleTime | Periodicity in sec. |
| bool | isSecurity | True if the received `TxCycleReq` command is encrypted. |

## 2.4 Private LoRa APIs

This section contains the following functions.

**Table 40. Private LoRa APIs**

| function | Description |
|---|---|
| PrivateLoRaInitialization | Initialize Private LoRa. |
| PrivateLoRaStart | Start Private LoRa. |
| PrivateLoRaStop | Stop Private LoRa. |
| PrivateLoRaProcess | Process the interruption. |
| PrivateLoRaGetRequest | Request Private LoRa Information Base service to get attribute of the Private LoRa layer. |
| PrivateLoRaSetRequest | Request Private LoRa Information Base service to set attribute of the Private LoRa layer. |
| PrivateLoRaRegisterRemoteDevice | Register the set of remote device and security information. |
| PrivateLoRaUnregisterRemoteDevice | Unregister the set of remote device and security information. |
| PrivateLoRaMcpsRequest | Request the Mac Layer Management Entity to handle the management service. |
| PrivateLoRaMlmeRequest | Request the Mac Common Part Sublayer to handle the data services |

### 2.4.1 PrivateLoRaInitialization

| **PrvLoRaStatus_t PrivateLoRaInitialization( PrvLoRaPrimitives_t *p_primitives, PrvLoRaRegion_t region )** | | |
|---|---|---|
| This function initializes Private LoRa layer.<br>Event handler functions to be set in 'p_primitives' are mandatory and user must implement them. | | |
| **Parameters** | | |
| | [IN] p_primitives | Pointer to a structure defining the Private LoRa event handler functions.<br>Must set all handler functions. See 0. |
| | [IN] region | The region to start. See 2.2.1. |
| **Return** | | |
| | PRVLORA_STATUS_OK | Initialization finished successfully. |
| | PRVLORA_STATUS_ERROR | Initialization failure. |
| | PRVLORA_STATUS_PARAMETER_INVALID | Requested parameter is invalid. |
| | PRVLORA_STATUS_NOT_SUPPORTED | Requested region is not supported. |
| | PRVLORA_STATUS_RADIO_ERROR | Radio driver initialization failure. |

### 2.4.2 PrivateLoRaStart

| **PrvLoRaStatus_t PrivateLoRaStart( void )** | |
|---|---|
| This function starts Private LoRa MAC process. | |
| **Parameters** | |
| - | |
| **Return** | |
| PRVLORA_STATUS_OK | Private LoRa was started successfully. |
| PRVLORA_STATUS_ERROR | Private LoRa could not be started or already started. |
| PRVLORA_STATUS_RADIO_PARAMETER_INVALID | Private LoRa could not be started because radio parameter (set of data rate and channel) is invalid. |

### 2.4.3 PrivateLoRaStop

| **PrvLoRaStatus_t PrivateLoRaStop( void )** | |
|---|---|
| This function stops Private LoRa MAC process. | |
| Parameters | |
| - | |
| **Return** | |
| PRVLORA_STATUS_OK | Private LoRa was stopped successfully. |
| PRVLORA_STATUS_ERROR | Private LoRa is not initialized. |
| PRVLORA_STATUS_BUSY | Private LoRa is busy and could not be stopped. |

### 2.4.4 PrivateLoRaProcess

| **void PrivateLoRaProcess( void )** |
|---|
| This function processes events that the Private LoRa may hold.<br>Application must periodically call this function in its main loop at an interval as short as possible. |
| **Parameters** |
| - |
| **Return** |
| - |

### 2.4.5 PrivateLoRaGetRequest

| **PrvLoRaStatus_t PrivateLoRaGetRequest( PrvLoRaIb_t ibId, PrvLoRaIbRequest_t *p_ibGet )** | |
|---|---|
| This function is the Private LoRa information base service to get attributes of the Private LoRa layer. | |
| **Parameters** | |
| [IN] ibId | Private LoRa MAC attribute type to get. See 2.2.4. |
| [OUT] p_ibGet | Parameters got from Private LoRa. See 2.3.1. |
| **Return** | |
| PRVLORA_STATUS_OK | The request is finished successfully. |
| PRVLORA_STATUS_ERROR | Private LoRa is not initialized. |
| PRVLORA_STATUS_PARAMETER_INVALID | Requested parameter is invalid. |
| PRVLORA_STATUS_SERVICE_UNKNOWN | Requested information base is unknown. |

### 2.4.6 PrivateLoRaSetRequest

| **PrvLoRaStatus_t PrivateLoRaSetRequest( PrvLoRaIb_t ibId, PrvLoRaIbRequest_t *p_ibSet )** | |
|---|---|
| This function is the PrivateLoRa information base service to set attributes of the Private LoRa layer.<br>Information base cannot be changed when PrivateLoRa service is running.<br>Information base parameters set by this function are initialized to their default values upon calling `PrivateLoRaInitialization()`. | |
| **Parameters** | |
| [IN] ibId | Private LoRa MAC attribute type to set. See 2.2.4. |
| [IN] p_ibSet | Parameters got from Private LoRa. See 2.3.1. |
| **Return** | |
| PRVLORA_STATUS_OK | The request is finished successfully. |
| PRVLORA_STATUS_ERROR | Private LoRa is not initialized. |
| PRVLORA_STATUS_BUSY | Private LoRa is busy. Another service is running. |
| PRVLORA_STATUS_PARAMETER_INVALID | Requested parameter is invalid. |
| PRVLORA_STATUS_SERVICE_UNKNOWN | Requested information base is unknown. |
| PRVLORA_STATUS_IB_ATTRIBUTE_INVALID | Requested information base is read only. |

### 2.4.7 PrivateLoRaRegisterRemoteDevice

| | |
|---|---|
| **PrvLoRaStatus_t PrivateLoRaRegisterRemoteDevice( uint8_t *p_remoteMacAddr, uint8_t *p_psk, uint8_t *p_sessionKey, uint32_t initFrameCounterTx, uint32_t initFrameCounterRx )** | |
| This function is to register the set of remote device and security information.<br>Registration is required to send and receive frames with the remote device.<br>If secured frame never be used, set dummy data to PSK (`*p_psk`) and frame counter (`initFrameCounterTx` and `initFrameCounterRx`). | |
| **Parameters** | |
| [IN] p_remoteMacAddr | MAC address of the remote device to register. |
| [IN] p_psk | Set 128bit (16Byte) PSK. NULL cannot be set.<br>If secured frame never be used, set dummy data. |
| [IN] p_sessionKey | Set 128bit (16Byte) session key if it is known. Otherwise set NULL. |
| [IN] initFrameCounterTx | Initial frame counter for Tx.<br>If secured frame never be used, set dummy value. |
| [IN] initFrameCounterRx | Initial frame counter for Rx. Note that set 0xFFFFFFFF to receive the frame whose frame counter is zero.<br>If secured frame never be used, set dummy value. |
| **Return** | |
| PRVLORA_STATUS_OK | The request is finished successfully. |
| PRVLORA_STATUS_ERROR | Private LoRa is not initialized, or no free entry to register new device information. |
| PRVLORA_STATUS_BUSY | Private LoRa is busy. Another service is running. |
| PRVLORA_STATUS_PARAMETER_INVALID | Requested parameter is invalid. |

### 2.4.8 PrivateLoRaUnregisterRemoteDevice

| | |
|---|---|
| **PrvLoRaStatus_t PrivateLoRaUnregisterRemoteDevice( uint8_t *p_remoteMacAddr )** | |
| This function is to unregister the set of remote device and security information.<br>Note that if indirect transmission requests to the specified remote device is remained, these are canceled. | |
| **Parameters** | |
| [IN] p_remoteMacAddr | MAC address of the remote device to unregister.<br>All remote device information will be unregistered if it is NULL. |
| **Return** | |
| PRVLORA_STATUS_OK | The request is finished successfully. |
| PRVLORA_STATUS_ERROR | Private LoRa is not initialized. |
| PRVLORA_STATUS_BUSY | Private LoRa is busy. Another service is running. |
| PRVLORA_STATUS_PARAMETER_INVALID | Requested parameter is invalid. |
| PRVLORA_STATUS_NO_ REMOTE_DEVICE_ENTRY | Specified remote device is not registered. |

### 2.4.9 PrivateLoRaMcpsRequest

| **PrvLoRaStatus_t PrivateLoRaMcpsRequest( PrvLoRaMcpsReq_t *p_mcpsReq )** | |
|---|---|
| This function requests Private LoRa MCPS-Request (send data message).<br>When the process of the transmission and the reception finish, the callback function `PrvLoRaMacMcpsConfirm()` in the `PrvLoRaPrimitives_t` will be called. | |
| **Parameters** | |
| [IN] p_mcpsReq | Pointer to a structure of MCPS-Request. See 2.3.3. |
| **Return** | |
| PRVLORA_STATUS_OK | The request is finished successfully. |
| PRVLORA_STATUS_ERROR | Private LoRa is not initialized. |
| PRVLORA_STATUS_INACTIVE | Private LoRa is not started. |
| PRVLORA_STATUS_BUSY | Private LoRa is busy. Another service is running. |
| PRVLORA_STATUS_PARAMETER_INVALID | Requested parameter is invalid. |
| PRVLORA_STATUS_NO_NETWORK | Not joined to the network. |
| PRVLORA_STATUS_NO_ REMOTE_DEVICE_ENTRY | The destination device is not registered. See 2.4.7. |

A flow diagram of MCPS sequence is shown below for reference.

- Direct transmission

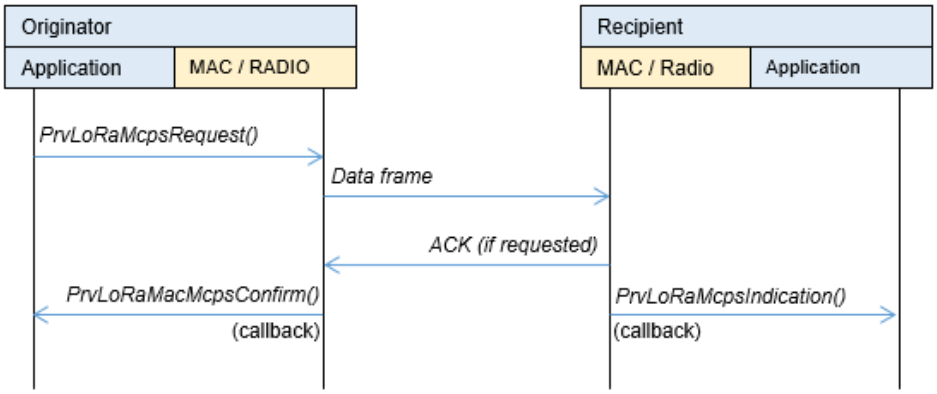


- Indirect transmission

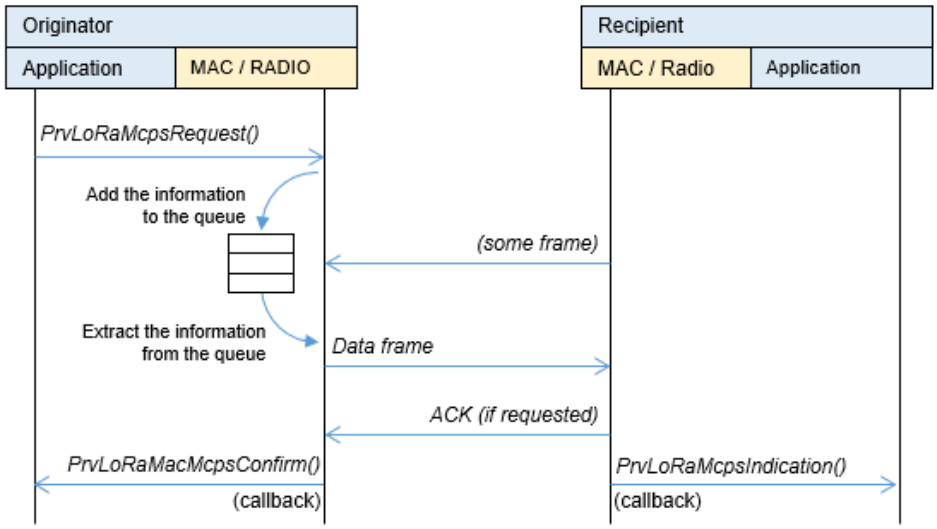

### 2.4.10 PrivateLoRaMlmeRequest

| **PrvLoRaStatus_t PrivateLoRaMlmeRequest( PrvLoRaMlmeReq_t *p_mlmeReq )** | |
|---|---|
| This function requests Private LoRa MLME-Request (send MAC command).<br>When the process of the transmission and the reception finish, the callback function `PrvLoRaMacMlmeConfirm()` in the `PrvLoRaPrimitives_t` will be called. | |
| **Parameters** | |
| [IN] p_mlmeReq | Pointer to a structure of MLME-Request. See 2.3.6. |
| **Return** | |
| PRVLORA_STATUS_OK | The request is finished successfully. |
| PRVLORA_STATUS_ERROR | Private LoRa is not initialized. |
| PRVLORA_STATUS_INACTIVE | Private LoRa is not started. |
| PRVLORA_STATUS_BUSY | Private LoRa is busy. Another service is running. |
| PRVLORA_STATUS_PARAMETER_INVALID | Requested parameter is invalid. |
| PRVLORA_STATUS_NO_NETWORK | Not joined to the network. |
| PRVLORA_STATUS_NO_ REMOTE_DEVICE_ENTRY | The destination device is not registered. See 2.4.7. |

A flow diagram of MLME sequence is shown below for reference.

- PRVLORA_MLME_KEY

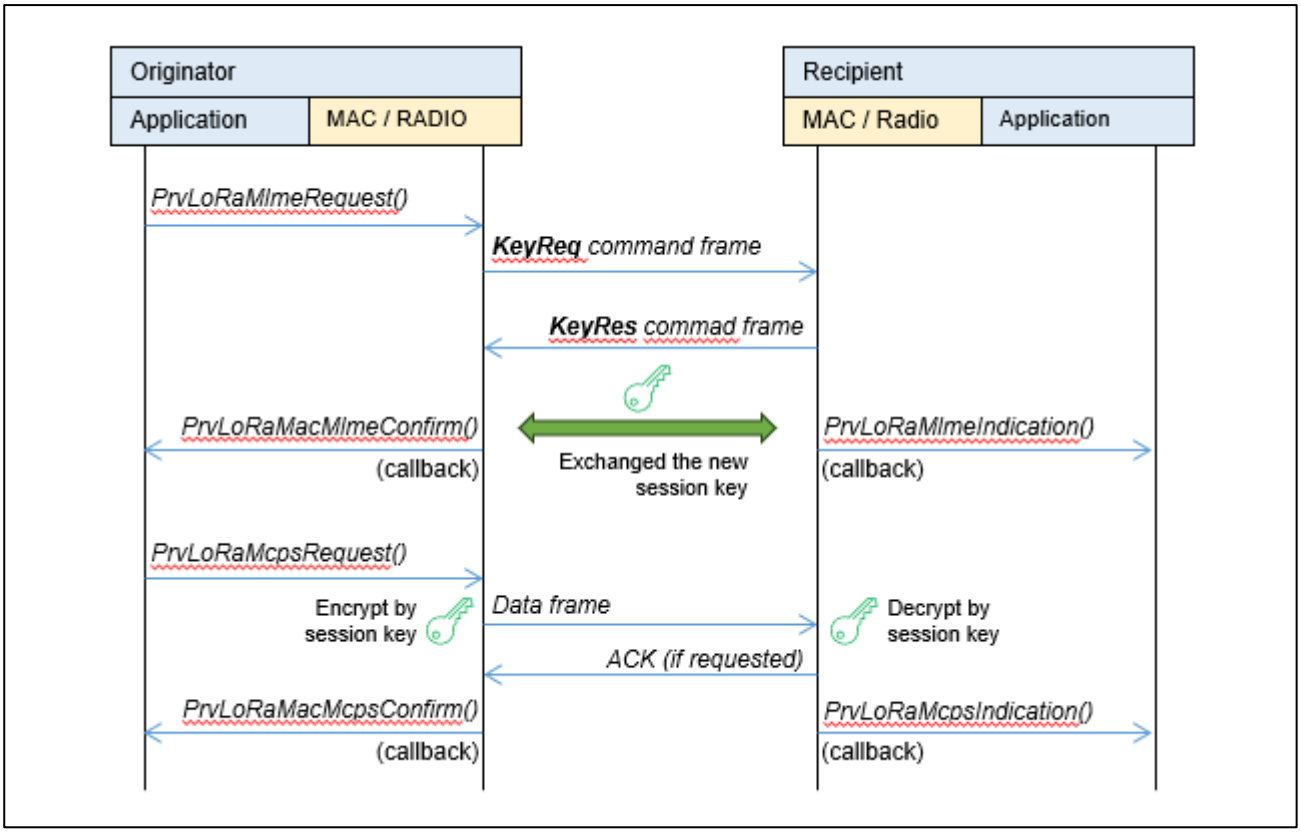

- PRVLORA_MLME_DEVINFO

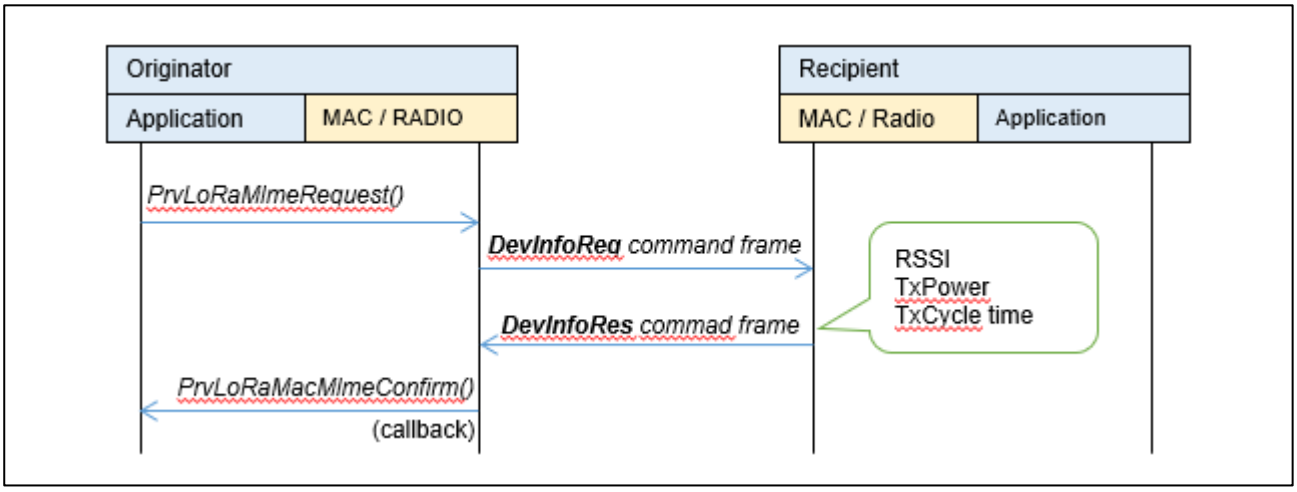


- PRVLORA_MLME_TXCYCLE

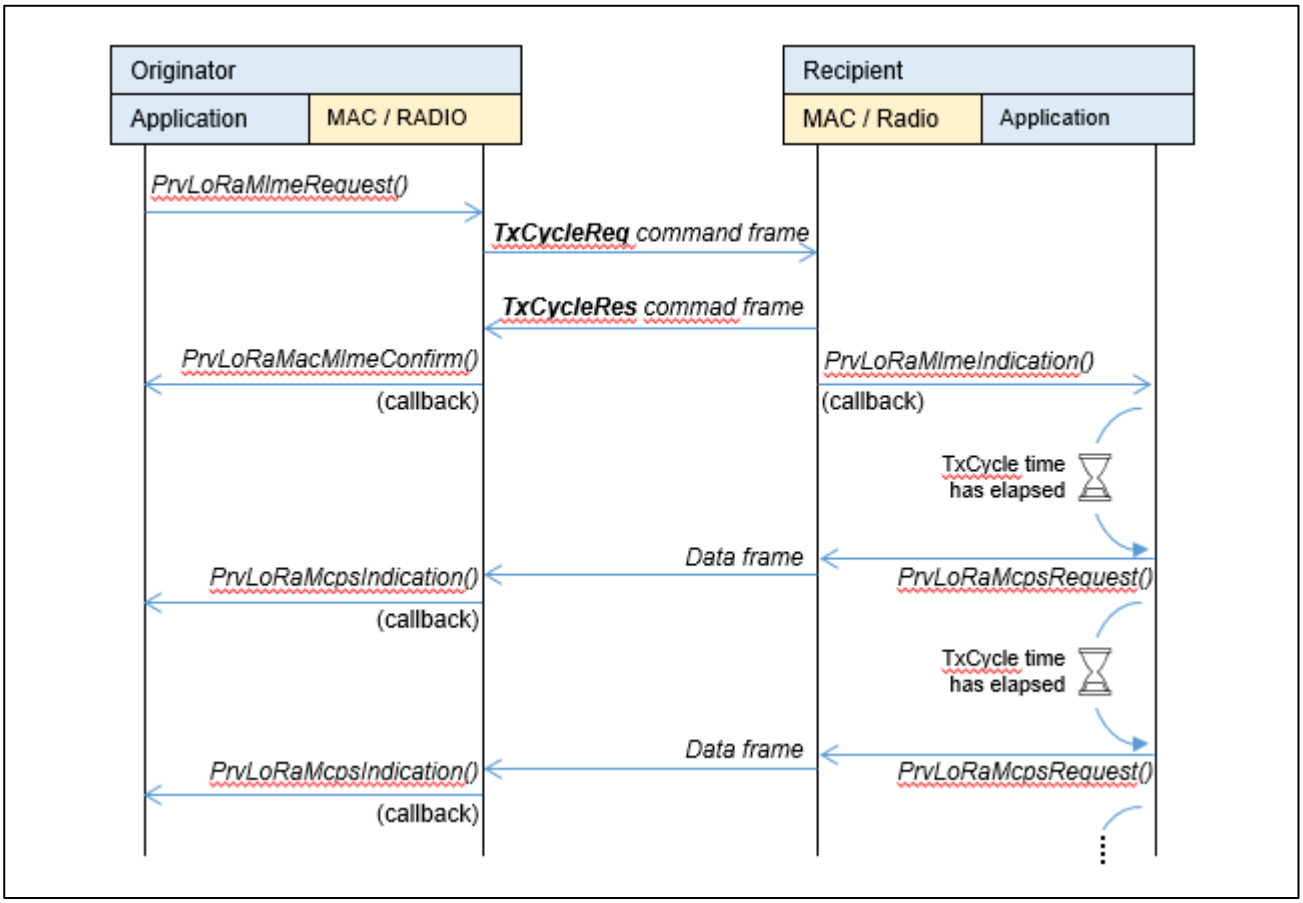

## 2.5 Private LoRa Primitive Callback Handler (LoRaMacPrimitives_t)

This type is a structure containing Private LoRa events handler functions used to notify upper layers Private LoRa primitive events. This structure includes the following member functions. These members must be set before calling `PrivateLoRaInitialization()` (see 2.4.1).

**Table 41. PrvLoRaPrimitives_t**

| Member | Description |
|---|---|
| void ( *PrvLoRaMacMcpsConfirm )( PrvLoRaMcpsCfm_t *p_mcpsCfm ) | Notify `PrivateLoRaMcpsRequest()` processed (see 2.4.9). |
| void ( *PrvLoRaMacMcpsIndication )( PrvLoRaMcpsInd_t *p_mcpsInd ) | Notify the payload received. |
| void ( *PrvLoRaMacMlmeConfirm )( PrvLoRaMlmeCfm_t *p_MlmeCfm ) | Notify `PrivateLoRaMlmeRequest()` was accepted (see 2.4.10). |
| void ( *PrvLoRaMacMlmeIndication )( PrvLoRaMlmeInd_t *p_MlmeInd ) | Notify the requested message received. |
| void ( *PrvLoRaMacNotification )( PrvLoRaNotification_t *p_notify ) | Notify the Private LoRa event. |

### 2.5.1 PrvLoRaMacMcpsConfirm

| **void ( *PrvLoRaMacMcpsConfirm )( PrvLoRaMcpsCfm_t *p_mcpsCfm )** | |
|---|---|
| This function notify that `PrivateLoRaMcpsRequest()` processed. | |
| **Parameters** | |
| [IN] p_mcpsCfm | Pointer to a structure of MCPS-Confirm. See 2.3.4. |
| **Return** | |
| - | |

### 2.5.2 PrvLoRaMacMcpsIndication

| **void ( *PrvLoRaMacMcpsIndication )( PrvLoRaMcpsInd_t *p_mcpsInd )** | |
|---|---|
| This function notifies the received payload. | |
| **Parameters** | |
| [IN] p_mcpsInd | Pointer to a structure of MCPS-Indication. See 2.3.5. |
| **Return** | |
| - | |

### 2.5.3 PrvLoRaMacMlmeConfirm

| **void ( *PrvLoRaMacMlmeConfirm )( PrvLoRaMlmeCfm_t *p_MlmeCfm )** | |
|---|---|
| This function notifies `PrivateLoRaMlmeRequest()` was completed | |
| **Parameters** | |
| [IN] p_mlmeCfm | Pointer to a structure of MLME-Confirm. See 2.3.9. |
| **Return** | |
| - | |

### 2.5.4 PrvLoRaMacMlmeIndication

| | |
|---|---|
| **void ( *PrvLoRaMacMlmeIndication )( PrvLoRaMlmeInd_t *p_MlmeInd )** | |
| This function notifies Private LoRa MLME-Indication primitive | |
| **Parameters** | |
| [IN] p_mlmeInd | Pointer to a structure of MLME-Indication. See 2.3.13. |
| **Return** | |
| - | |

### 2.5.5 PrvLoRaMacNotification

| | |
|---|---|
| **void ( *PrvLoRaMacMlmeIndication )( PrvLoRaMlmeInd_t *p_MlmeInd )** | |
| This function notifies Private LoRa MLME-Indication primitive | |
| **Parameters** | |
| [IN] p_mlmeInd | Pointer to a structure of MLME-Indication. See 2.3.13. |
| **Return** | |
| - | |

# 3. Timer

Timer provides timer event and a system time value.
For more details, please refer to [1].

# 4. Power Saving

## 4.1 PrivateLoRaSetLowPower

| **PrvLoRaStatus_t PrivateLoRaSetLowPower( void )** | |
|---|---|
| This function sets MCU to the low power mode. Application can call this function when it can be in the low power mode. In this function, MCU will be in the low power mode if Private LoRa is not busy. This function is not available for Private LoRa coordinator and devices which Rx is running when in idle. | |
| **Parameters** | |
| - | |
| **Return** | |
| PRVLORA_STATUS_OK | MCU could be set to the low power mode and returned to the normal mode successfully. |
| PRVLORA_STATUS_BUSY | MCU cannot be set to the low power mode due to the following reasons:<br>- Private LoRa is busy.<br>- Application disallows MCU to be set to low power mode. (See below) |
| **Additional explanation** | |
| Application can allow/disallow MCU low power by using `BoardIsLowPowerAllowed()` function. It is called before MCU will be in the low power mode.<br><br>`[board.c] bool BoardIsLowPowerAllowed( void )`<br><br>Please make `BoardIsLowPowerAllowed` return true if MCU can be set to the low power mode, false if not. | |

# 5. Sample Code (Informative)

## 5.1 Initialize and Start the Private LoRa

The following code-snippet shows how to use the API to initialize and start the Private LoRa.

```
#include "PrivateLoRa.h"

static void AppPrvLoRaCallbackMcpsConfirm( PrvLoRaMcpsCfm_t *p_mcpsCfm );
static void AppPrvLoRaCallbackMcpsIndication( PrvLoRaMcpsInd_t *p_mcpsInd );
static void AppPrvLoRaCallbackMlmeConfirm( PrvLoRaMlmeCfm_t *p_mlmeCfm );
static void AppPrvLoRaCallbackMlmeIndication( PrvLoRaMlmeInd_t *p_mlmeInd );
static void AppPrvLoRaCallbackMacNotification(PrvLoRaNotification_t *p_notify );

PrvLoRaPrimitives_t  appPrvLoRaPrimitives;

/* Set Private LoRa primitives */
appPrvLoRaPrimitives.PrvLoRaMacMcpsConfirm      = AppPrvLoRaCallbackMcpsConfirm;
appPrvLoRaPrimitives.PrvLoRaMacMcpsIndication   = AppPrvLoRaCallbackMcpsIndication;
appPrvLoRaPrimitives.PrvLoRaMacMlmeConfirm      = AppPrvLoRaCallbackMlmeConfirm;
appPrvLoRaPrimitives.PrvLoRaMacMlmeIndication   = AppPrvLoRaCallbackMlmeIndication;
appPrvLoRaPrimitives.PrvLoRaMacNotification     = AppPrvLoRaCallbackMacNotification;

/* Initialize Private LoRa */
PrivateLoRaInitialization( &appPrvLoRaPrimitives, PRVLORA_REGION_EU );

/* Start Private LoRa */
PrivateLoRaStart();
```

## 5.2 Set Private LoRa IB Parameters

The following code-snippet shows how to use the API to set the parameters; `MAC address`, `channel ID`, and `data rate ID`.

```
static uint8_t MacAddr[ 8 ] = { 0x00, 0x11, 0x22, 0x33, 0x44, 0x55, 0x66 0x77 };

PrvLoRaIbRequest_t  ibSet;

/* MAC address */
memcpy( &(ibSet.macAddr[0]), MacAddr, 8 );
PrivateLoRaSetRequest( PRVLORA_IB_MACADDR, &ibSet );

/* Channel ID and data rate */
ibSet.drIndex = 2;  // Data rate ID = 2 : LoRa®: SF10 - BW125 kHz
PrivateLoRaSetRequest( PRVLORA_IB_DR, &ibSet );

ibSet.channelId = 1;  // channel ID = 1 : 863.3MHz (in case data rate ID = 2)
PrivateLoRaSetRequest( PRVLORA_IB_CHANNEL_ID, &ibSet );
```

## 5.3 Get Private LoRa IB Parameters

The following code-snippet shows how to use the API to get the parameters; `MAC address`, `channel ID`, and `data rate ID`.

```
static uint8_t MacAddr[ 8 ], datarate_ID, channel_ID;

PrvLoRaIbRequest_t  ibGet;
PrvLoRaStatus_t       status;

/* MAC Address */
status = PrivateLoRaGetRequest( PRVLORA_IB_MACADDR, &ibGet );
if( status == PRVLORA_STATUS_OK )
{
        memcpy( MacAddr, &(ibGet.macAddr[0]), 8 );
}

/* Channel ID and data rate */
status = PrivateLoRaGetRequest( PRVLORA_IB_DR, &ibGet );
if( status == PRVLORA_STATUS_OK )
{
        datarate_ID = ibGet.drIndex;
}
status = PrivateLoRaGetRequest( PRVLORA_IB_CHANNEL_ID, &ibGet );
if( status == PRVLORA_STATUS_OK )
{
        channel_ID = ibGet.channelId;
}
```

## 5.4 Remote Device Registration for Communication

The following code-snippet shows how to use the API to communicate with remote device. Registration is required to send and receive frames with the remote device. If secured frame never be used, set dummy data to PSK and frame counter.

```
static uint8_t DestMacAddr[ 8 ] = { 0x88, 0x99, 0xAA, 0xBB, 0xCC, 0xDD, 0xEE, 0xFF };
static uint8_t PSK[ 16 ] = { 0x2B, 0x7E, 0x15, 0x16, 0x28, 0xAE, 0xD2, 0xA6, 0xAB, 0xF7, 0x15, 0x88,
0x09, 0xCF, 0x4F, 0x3C };

uint8_t *p_sessionKey = NULL;  // set session key (16 Byte) if known.

/* Resigter remote device */
PrivateLoRaRegisterRemoteDevice( DevMacAddr, PSK, p_sessionKey, 0, 0xFFFFFFFF );
```

## 5.5 Send Data

The following code-snippet shows how to use the API to send data.

```
static uint8_t DestMacAddr[ 8 ] = { 0x88, 0x99, 0xAA, 0xBB, 0xCC, 0xDD, 0xEE, 0xFF };
uint8_t DataBuff[ 3 ] = { 1, 2, 3 };

PrvLoRaMcpsReq_t   mcpsReq;
PrvLoRaStatus_t    status;

memcpy( &(mcpsReq.dstMacAddr[0]), &(DestMacAddr[0]), 8 );
mcpsReq.p_txData                          = DataBuff;
mcpsReq.txDataSize                        = sizeof( DataBuff );
mcpsReq.txHandle                          = 0;   // arbitrary value
mcpsReq.txOptions.txOptValue              = 0;   // (initialize)
mcpsReq.txOptions.options.AckRequest      = 1;   // request ACK to the destination (if necessary)
mcpsReq.txOptions.options.SecEnable       = 1;   // encrypt message (if necessary)

status = PrivateLoRaMcpsRequest( &mcpsReq );
if( status == PRVLORA_STATUS_OK )
{
    // Service started successfully. Waiting for the MCPS-Confirm event (callback).
}
```

## 5.6 Send Command

The following code-snippet shows how to use the API to send command `KeyReq`.

```
static uint8_t DestMacAddr[ 8 ] = { 0x88, 0x99, 0xAA, 0xBB, 0xCC, 0xDD, 0xEE, 0xFF };

PrvLoRaMlmeReq_t   mlmeReq;
PrvLoRaStatus_t    status;

mlmeReq.mlmeType = PRVLORA_MLME_KEY;
memcpy( &(mlmeReq.req.keyReq.dstMacAddr[0]), &(DestMacAddr[0]), 8 );
mlmeReq.req.keyReq.TxOption.txOptValue            = 0;
mlmeReq.req.keyReq.TxOption.options.InderectTx = 0;   // indirect transmission (set 1 if necessary)

status = PrivateLoRaMlmeRequest( &mlmeReq );
if( status == PRVLORA_STATUS_OK )
{
    // Service started successfully. Waiting for the MLME-Confirm event (callback).
}
```

## Revision History

| Rev. | Date | Description | |
|---|---|---|---|
| | | Section | Summary |
| 04.40 | Dec.22.23 | - | Initial Release |
| 04.50 | May.24.24 | - | Supported RA0E1 (R7FA0E1073CFJ) as a target device. |

# General Precautions in the Handling of Microprocessing Unit and Microcontroller Unit Products

The following usage notes are applicable to all Microprocessing unit and Microcontroller unit products from Renesas. For detailed usage notes on the products covered by this document, refer to the relevant sections of the document as well as any technical updates that have been issued for the products.

1. Precaution against Electrostatic Discharge (ESD)

   A strong electrical field, when exposed to a CMOS device, can cause destruction of the gate oxide and ultimately degrade the device operation. Steps must be taken to stop the generation of static electricity as much as possible, and quickly dissipate it when it occurs. Environmental control must be adequate. When it is dry, a humidifier should be used. This is recommended to avoid using insulators that can easily build up static electricity. Semiconductor devices must be stored and transported in an anti-static container, static shielding bag or conductive material. All test and measurement tools including work benches and floors must be grounded. The operator must also be grounded using a wrist strap. Semiconductor devices must not be touched with bare hands. Similar precautions must be taken for printed circuit boards with mounted semiconductor devices.

2. Processing at power-on

   The state of the product is undefined at the time when power is supplied. The states of internal circuits in the LSI are indeterminate and the states of register settings and pins are undefined at the time when power is supplied. In a finished product where the reset signal is applied to the external reset pin, the states of pins are not guaranteed from the time when power is supplied until the reset process is completed. In a similar way, the states of pins in a product that is reset by an on-chip power-on reset function are not guaranteed from the time when power is supplied until the power reaches the level at which resetting is specified.

3. Input of signal during power-off state

   Do not input signals or an I/O pull-up power supply while the device is powered off. The current injection that results from input of such a signal or I/O pull-up power supply may cause malfunction and the abnormal current that passes in the device at this time may cause degradation of internal elements. Follow the guideline for input signal during power-off state as described in your product documentation.

4. Handling of unused pins

   Handle unused pins in accordance with the directions given under handling of unused pins in the manual. The input pins of CMOS products are generally in the high-impedance state. In operation with an unused pin in the open-circuit state, extra electromagnetic noise is induced in the vicinity of the LSI, an associated shoot-through current flows internally, and malfunctions occur due to the false recognition of the pin state as an input signal become possible.

5. Clock signals

   After applying a reset, only release the reset line after the operating clock signal becomes stable. When switching the clock signal during program execution, wait until the target clock signal is stabilized. When the clock signal is generated with an external resonator or from an external oscillator during a reset, ensure that the reset line is only released after full stabilization of the clock signal. Additionally, when switching to a clock signal produced with an external resonator or by an external oscillator while program execution is in progress, wait until the target clock signal is stable.

6. Voltage application waveform at input pin

   Waveform distortion due to input noise or a reflected wave may cause malfunction. If the input of the CMOS device stays in the area between $V_{IL}$ (Max.) and $V_{IH}$ (Min.) due to noise, for example, the device may malfunction. Take care to prevent chattering noise from entering the device when the input level is fixed, and also in the transition period when the input level passes through the area between $V_{IL}$ (Max.) and $V_{IH}$ (Min.).

7. Prohibition of access to reserved addresses

   Access to reserved addresses is prohibited. The reserved addresses are provided for possible future expansion of functions. Do not access these addresses as the correct operation of the LSI is not guaranteed.

8. Differences between products

   Before changing from one product to another, for example to a product with a different part number, confirm that the change will not lead to problems. The characteristics of a microprocessing unit or microcontroller unit products in the same group but having a different part number might differ in terms of internal memory capacity, layout pattern, and other factors, which can affect the ranges of electrical characteristics, such as characteristic values, operating margins, immunity to noise, and amount of radiated noise. When changing to a product with a different part number, implement a system-evaluation test for the given product.

# Notice

1. Descriptions of circuits, software and other related information in this document are provided only to illustrate the operation of semiconductor products and application examples. You are fully responsible for the incorporation or any other use of the circuits, software, and information in the design of your product or system. Renesas Electronics disclaims any and all liability for any losses and damages incurred by you or third parties arising from the use of these circuits, software, or information.
2. Renesas Electronics hereby expressly disclaims any warranties against and liability for infringement or any other claims involving patents, copyrights, or other intellectual property rights of third parties, by or arising from the use of Renesas Electronics products or technical information described in this document, including but not limited to, the product data, drawings, charts, programs, algorithms, and application examples.
3. No license, express, implied or otherwise, is granted hereby under any patents, copyrights or other intellectual property rights of Renesas Electronics or others.
4. You shall be responsible for determining what licenses are required from any third parties, and obtaining such licenses for the lawful import, export, manufacture, sales, utilization, distribution or other disposal of any products incorporating Renesas Electronics products, if required.
5. You shall not alter, modify, copy, or reverse engineer any Renesas Electronics product, whether in whole or in part. Renesas Electronics disclaims any and all liability for any losses or damages incurred by you or third parties arising from such alteration, modification, copying or reverse engineering.
6. Renesas Electronics products are classified according to the following two quality grades: “Standard” and “High Quality”. The intended applications for each Renesas Electronics product depends on the product’s quality grade, as indicated below.
   "Standard": Computers; office equipment; communications equipment; test and measurement equipment; audio and visual equipment; home electronic appliances; machine tools; personal electronic equipment; industrial robots; etc.
   "High Quality": Transportation equipment (automobiles, trains, ships, etc.); traffic control (traffic lights); large-scale communication equipment; key financial terminal systems; safety control equipment; etc.
   Unless expressly designated as a high reliability product or a product for harsh environments in a Renesas Electronics data sheet or other Renesas Electronics document, Renesas Electronics products are not intended or authorized for use in products or systems that may pose a direct threat to human life or bodily injury (artificial life support devices or systems; surgical implantations; etc.), or may cause serious property damage (space system; undersea repeaters; nuclear power control systems; aircraft control systems; key plant systems; military equipment; etc.). Renesas Electronics disclaims any and all liability for any damages or losses incurred by you or any third parties arising from the use of any Renesas Electronics product that is inconsistent with any Renesas Electronics data sheet, user’s manual or other Renesas Electronics document.
7. No semiconductor product is absolutely secure. Notwithstanding any security measures or features that may be implemented in Renesas Electronics hardware or software products, Renesas Electronics shall have absolutely no liability arising out of any vulnerability or security breach, including but not limited to any unauthorized access to or use of a Renesas Electronics product or a system that uses a Renesas Electronics product. RENESAS ELECTRONICS DOES NOT WARRANT OR GUARANTEE THAT RENESAS ELECTRONICS PRODUCTS, OR ANY SYSTEMS CREATED USING RENESAS ELECTRONICS PRODUCTS WILL BE INVULNERABLE OR FREE FROM CORRUPTION, ATTACK, VIRUSES, INTERFERENCE, HACKING, DATA LOSS OR THEFT, OR OTHER SECURITY INTRUSION (“Vulnerability Issues”). RENESAS ELECTRONICS DISCLAIMS ANY AND ALL RESPONSIBILITY OR LIABILITY ARISING FROM OR RELATED TO ANY VULNERABILITY ISSUES. FURTHERMORE, TO THE EXTENT PERMITTED BY APPLICABLE LAW, RENESAS ELECTRONICS DISCLAIMS ANY AND ALL WARRANTIES, EXPRESS OR IMPLIED, WITH RESPECT TO THIS DOCUMENT AND ANY RELATED OR ACCOMPANYING SOFTWARE OR HARDWARE, INCLUDING BUT NOT LIMITED TO THE IMPLIED WARRANTIES OF MERCHANTABILITY, OR FITNESS FOR A PARTICULAR PURPOSE.
8. When using Renesas Electronics products, refer to the latest product information (data sheets, user’s manuals, application notes, “General Notes for Handling and Using Semiconductor Devices” in the reliability handbook, etc.), and ensure that usage conditions are within the ranges specified by Renesas Electronics with respect to maximum ratings, operating power supply voltage range, heat dissipation characteristics, installation, etc. Renesas Electronics disclaims any and all liability for any malfunctions, failure or accident arising out of the use of Renesas Electronics products outside of such specified ranges.
9. Although Renesas Electronics endeavors to improve the quality and reliability of Renesas Electronics products, semiconductor products have specific characteristics, such as the occurrence of failure at a certain rate and malfunctions under certain use conditions. Unless designated as a high reliability product or a product for harsh environments in a Renesas Electronics data sheet or other Renesas Electronics document, Renesas Electronics products are not subject to radiation resistance design. You are responsible for implementing safety measures to guard against the possibility of bodily injury, injury or damage caused by fire, and/or danger to the public in the event of a failure or malfunction of Renesas Electronics products, such as safety design for hardware and software, including but not limited to redundancy, fire control and malfunction prevention, appropriate treatment for aging degradation or any other appropriate measures. Because the evaluation of microcomputer software alone is very difficult and impractical, you are responsible for evaluating the safety of the final products or systems manufactured by you.
10. Please contact a Renesas Electronics sales office for details as to environmental matters such as the environmental compatibility of each Renesas Electronics product. You are responsible for carefully and sufficiently investigating applicable laws and regulations that regulate the inclusion or use of controlled substances, including without limitation, the EU RoHS Directive, and using Renesas Electronics products in compliance with all these applicable laws and regulations. Renesas Electronics disclaims any and all liability for damages or losses occurring as a result of your noncompliance with applicable laws and regulations.
11. Renesas Electronics products and technologies shall not be used for or incorporated into any products or systems whose manufacture, use, or sale is prohibited under any applicable domestic or foreign laws or regulations. You shall comply with any applicable export control laws and regulations promulgated and administered by the governments of any countries asserting jurisdiction over the parties or transactions.
12. It is the responsibility of the buyer or distributor of Renesas Electronics products, or any other party who distributes, disposes of, or otherwise sells or transfers the product to a third party, to notify such third party in advance of the contents and conditions set forth in this document.
13. This document shall not be reprinted, reproduced or duplicated in any form, in whole or in part, without prior written consent of Renesas Electronics.
14. Please contact a Renesas Electronics sales office if you have any questions regarding the information contained in this document or Renesas Electronics products.

(Note1) “Renesas Electronics” as used in this document means Renesas Electronics Corporation and also includes its directly or indirectly controlled subsidiaries.
(Note2) “Renesas Electronics product(s)” means any product developed or manufactured by or for Renesas Electronics.

(Rev.5.0-1 October 2020)


## Corporate Headquarters

TOYOSU FORESIA, 3-2-24 Toyosu,
Koto-ku, Tokyo 135-0061, Japan
www.renesas.com

## Contact information

For further information on a product, technology, the most up-to-date version of a document, or your nearest sales office, please visit:
www.renesas.com/contact/.


## Trademarks

Arm® and Cortex® are registered trademarks of Arm Limited. Semtech, the Semtech logo, LoRa, LoRaWAN and LoRa Alliance are registered trademarks or service marks, or trademarks or service marks, of Semtech Corporation and/or its affiliates. Renesas and the Renesas logo are trademarks of Renesas Electronics Corporation. All trademarks and registered trademarks are the property of their respective owners.

© 2023 Renesas Electronics Corporation. All rights reserved.