iC-TW39

24-Bit Magnetic On-Axis Angle Sensor

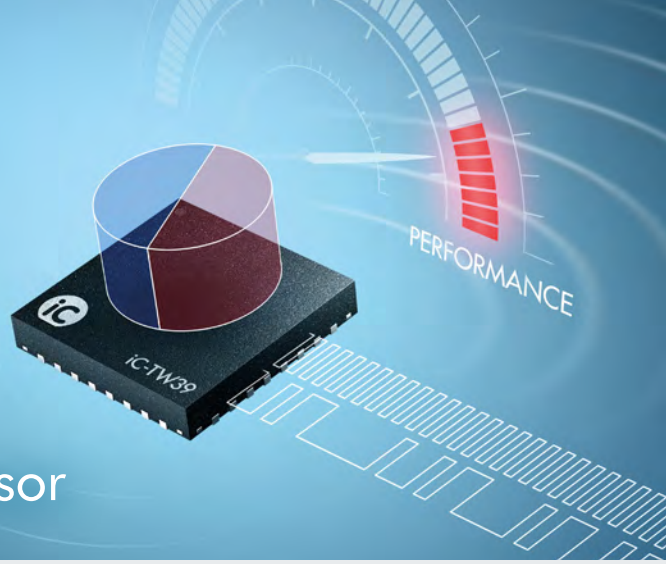

Description

The iC-TW39 is a very compact TMR-based system-on-chip solution for 360-degree absolute angle sensing in the end-of-shaft position. The sensor tracks the magnetic field direction in the X-Y chip plane, with relaxed tolerances for IC placement and operating distance to the diametrical magnet. Utilizing a high-resolution interpolator with digital filtering and automatic error correction, the chip ensures minimal angular error, excellent position jitter even at low speeds, and unmatched position noise at standstill.

The fast data processing refreshes the absolute angle position every 20 ns for immediate output via BiSS, SSI or SPI. In addition, incremental ABZ signals are available with resolutions of 1 to 65,536 cycles per revolution, or alternatively, UVW commutation signals for 1 to 32 pole-pair motors. The iC-TW39 can be configured using the bidirectional BiSS interface or SPI. Extensive status and signal quality monitoring capabilities allow detection and notification of poor operating conditions, as well as drive monitoring for predictive maintenance.

Applications

- High-resolution angle sensing
- Brushless motor commutation (2...64 poles)
- Servo motor control
- Incremental or absolute rotary encoders

Features

- TMR-based absolute angle sensor over 360°
- High operating distance and axial play tolerance
- Push-button calibration for ease of installation
- Automatic signal error correction in operation
- Rotation speed up to 360,000 rpm
- User-programmable ABZ output with 1 up to 65,536 pulses
- Adjustable zero position and length
- Fast AB output up to 12.5 MHz, adjustable minimum transition distance
- Outstanding AB jitter performance (e.g. ±2 % at 2500 cpr)
- UVW output at 1 up to 32 cpr, adjustable rotor angle
- Bidirectional open-source BiSS interface, profile compatible
- 20 MHz SPI interface
- High angle resolution of up to 24 bits
- 24-bit revolution counting (initialization by MT interface is optional)
- High accuracy (INL ±0.15°) and repeatability (0.04°)
- Ultra-low output lag of 1.5 µs
- Configurable status monitoring for alarm output
- User-programmable on-chip EEPROM
- Operation at 3.3 V from –40 °C to +125 °C

Block Diagram

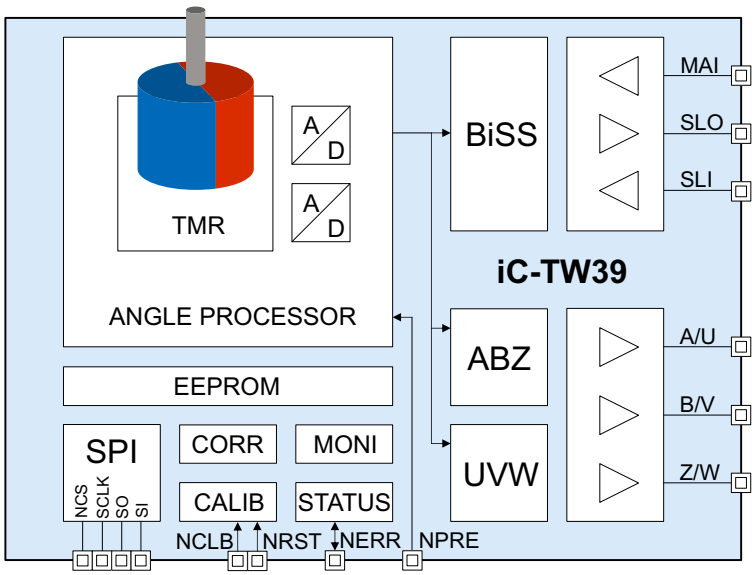

iC-TW39
24-Bit Magnetic On-Axis Angle Sensor

Key Specifications

General	
Supply Voltage	3.1 V to 3.6 V, 30 mA typical
Startup Time	10 ms max.
Operating Temperature Range	–40 °C to 125 °C
Magnetic Field Range	30 mT to 160 mT
Magnetic Input Frequency	0 … 6 kHz
Reference Target	Diametrical magnet, recommended min. size: Ø 9 mm × 2.5 mm, approx. 60 mT
Operating Distance	0.5 … 2 mm (typ. air gap)

Performance	
Accuracy (INL)	± 0.15°
Jitter (DNL)	± 0.002° at 10,000 AB cycles
Angle Noise (Nrms)	25 arc seconds at standstill
Noise-free Resolution	13 bits
Position Update Rate	20 ns
Output Lag	1.5 µs

Incremental Outputs and Interfaces	
Serial I/O	BiSS (10 MHz), SSI (1 MHz), SPI (20 MHz), BiSS/SSI/SPI angle resolution up to 24 bits (adjustable zero position), revolution counting with up to 24 bits (optional with multiturn data processing)
Incremental	A/B with Z index (adjustable gating and position), up to 65536 pulses per rev. U/V/W with 1 up to 32 pulses per rev. (adjustable commutation angle)

Monitoring Features

Signal loss and sensor failure detection, maximum rotation speed detection, excessive signal error deviation, signal processing malfunction, corrupt configuration data, excessive temperature

Pin Configuration QFN32-5×5

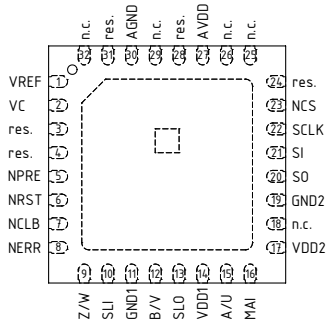

Pin Functions

No.	Name	Function
1, 2	VREF, VC	ADC Reference Voltages
6	NRST	Reset Input (low active)
5	NPRE	BiSS Position Preset Input (low active)
7	NCLB	Auto-Calibration Input (low active)
8	NERR	Error Output (low active)
9	Z/W	Incremental Output
12	B/V	Incremental Output (optional: MTDAT)
15	A/U	Incremental Output (optional: MTCLK)
10	SLI	BiSS Interface, Data Input
13	SLO	BiSS Interface, Data Output
16	MAI	BiSS Interface, Clock Input
20	SO	SPI Slave Output (Master Input)
21	SI	SPI Slave Input (Master Output)
22	SCLK	SPI Clock Input
23	NCS	SPI Slave Select Input (low active)
14, 17	VDDx	+3.3 V Digital Supply Inputs
11, 19	GNDx	Digital Grounds
27	AVDD	+3.3 V Analog Supply Input
30	AGND	Analog Ground
3, 4, 24, 28, 31	res.	Reserved (refer to datasheet for instructions)
	n.c.	Not connected

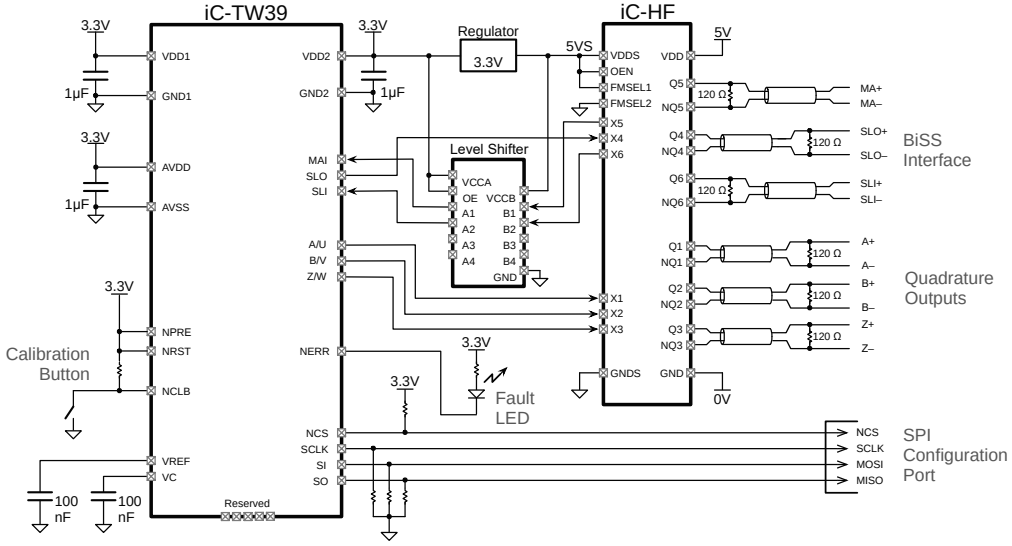

Application circuit example of serial absolute BiSS encoder featuring additional RS-422 quadrature outputs.

Am Kuemmerling 18 · D-55294 Bodenheim, Germany
Phone: +49 (6135) 9292-30 00 · Fax: +49 (6135) 9292-192
www.ichaus.com

This preliminary information is not a guarantee of device characteristics or performance. All rights to technical changes reserved.
© iC-Haus GmbH · Rev. 7.0