| REVISIONS | | | | |
|---|---|---|---|---|
| ZONE | REV. | DESCRIPTION | DATE | APPROVED |
| | 0 | INITIAL DRAWING RELEASE | 07/04/2025 | |

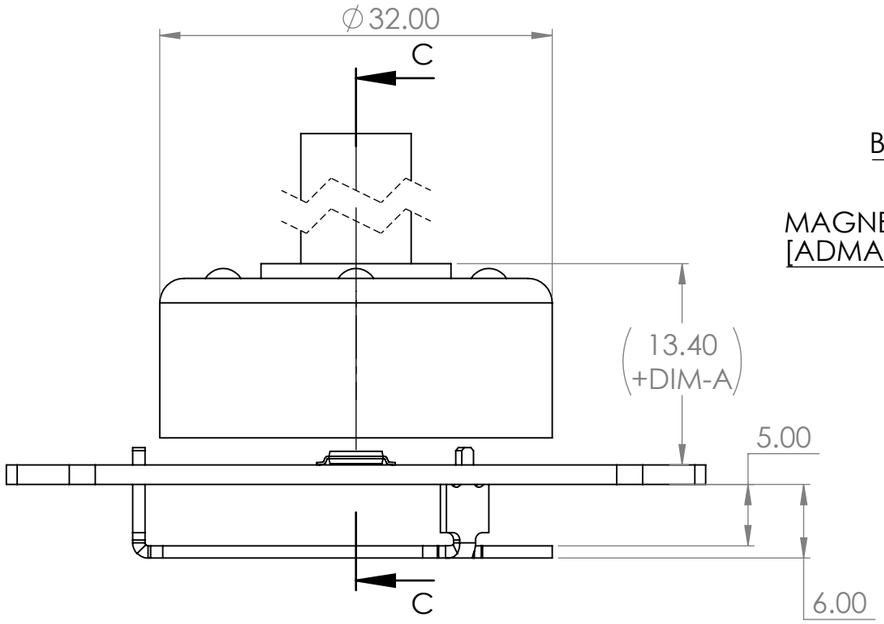


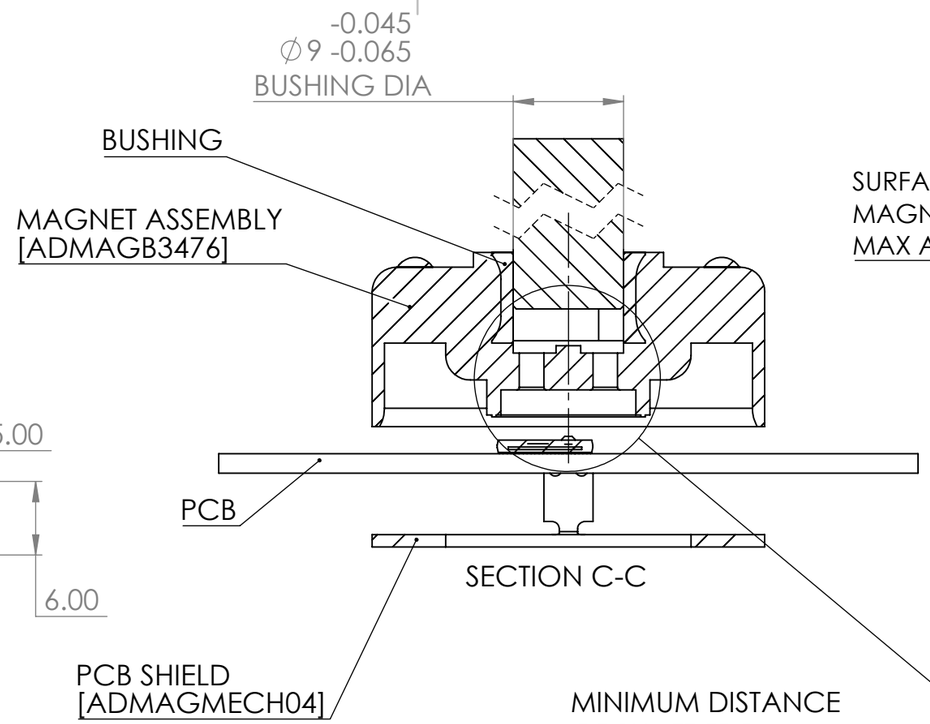


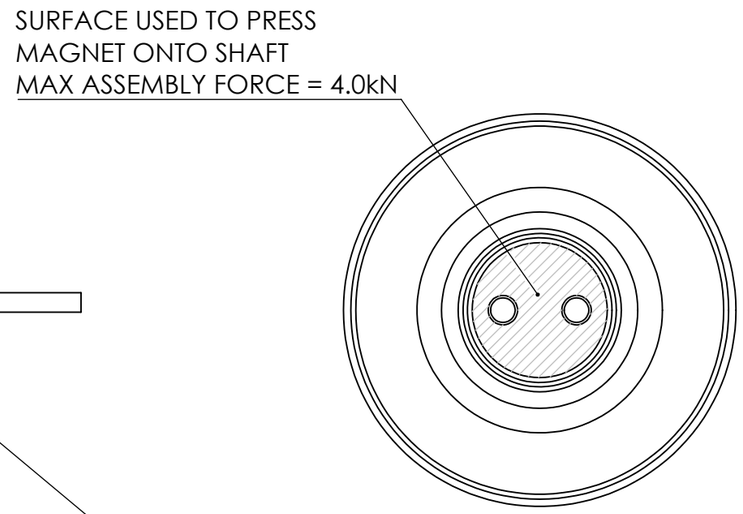


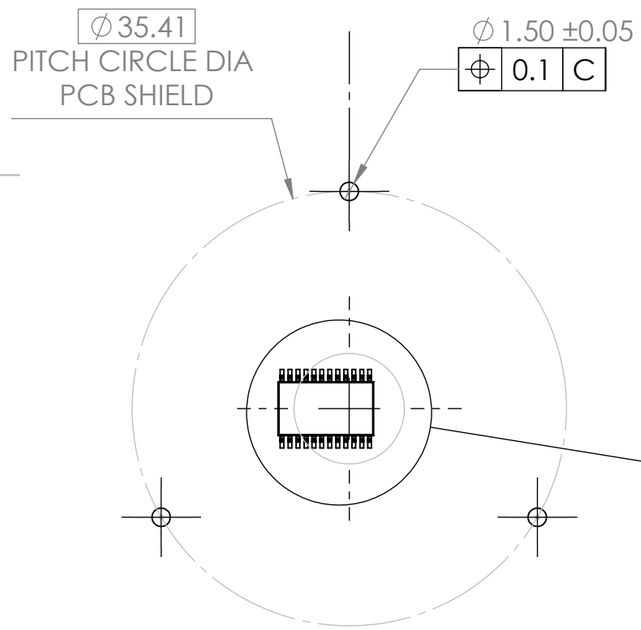


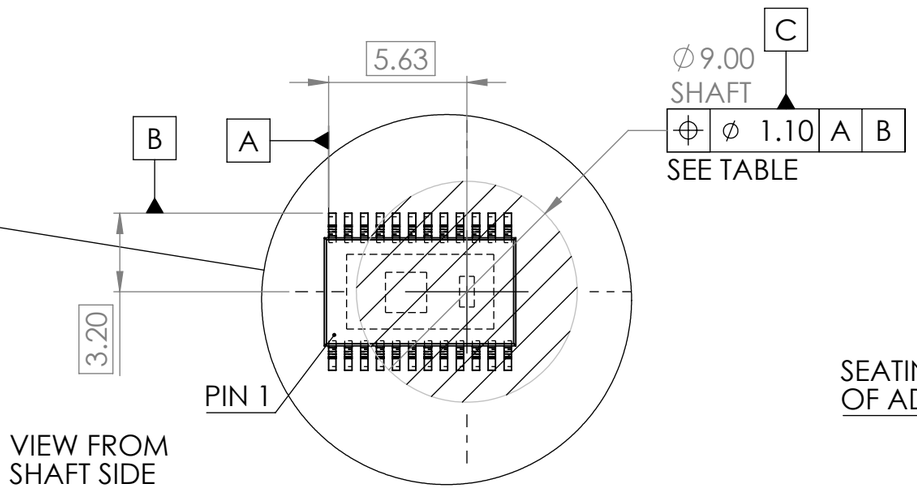


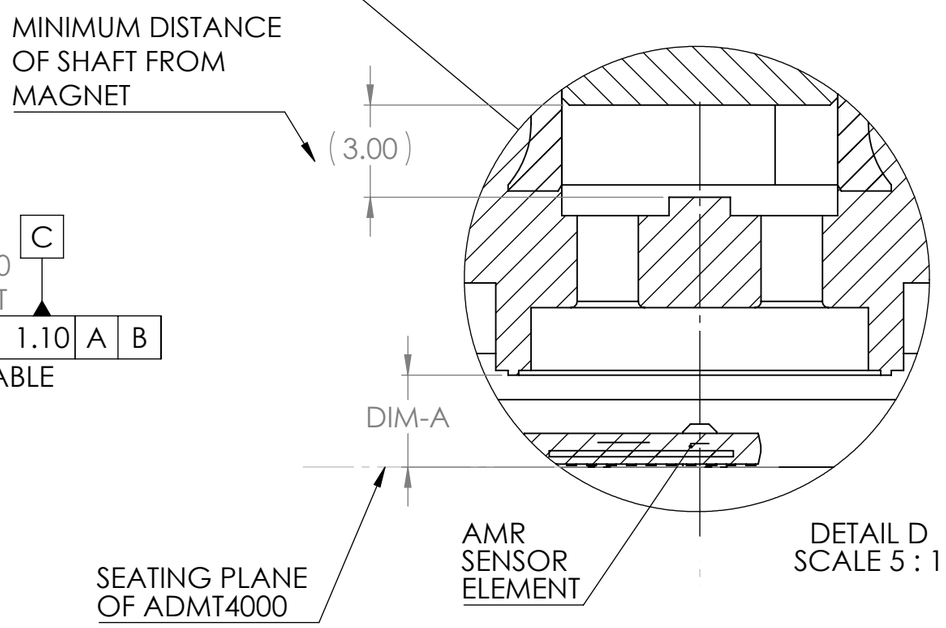


| | DIM-A | SHAFT POS TOL |
|---|---|---|
| WITH PCB SHIELD | 3.09 ±0.52 | 1.10 |
| WITHOUT PCB SHIELD | 3.26 ±0.50 | 1.08 |

DRAFT REVIEW
WIP 08/04/2025

DO NOT SCALE DRAWING | REVISION 0

ADI MagIC+™

TITLE:

ADMAG3476

DWG NO. EV-ADMT4000KTZ_CUST_R0 | A3

SCALE:2:1 | SHEET 1 OF 1