Wire-to-Board Connectors

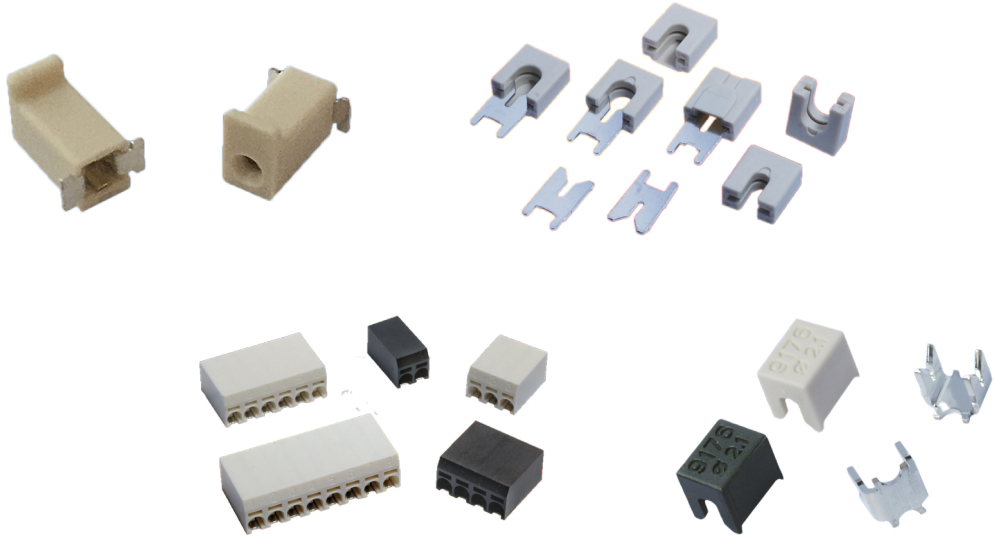

090721

IMPORTANT INFORMATION/DISCLAIMER

All product specifications, statements, information and data (collectively, the "Information") in this datasheet or made available on the website are subject to change. The customer is responsible for checking and verifying the extent to which the Information contained in this publication is applicable to an order at the time the order is placed. All Information given herein is believed to be accurate and reliable, but it is presented without guarantee, warranty, or responsibility of any kind, expressed or implied.

Statements of suitability for certain applications are based on KYOCERA AVX knowledge of typical operating conditions for such applications, but are not intended to constitute and KYOCERA AVX specifically disclaims any warranty concerning suitability for a specific customer application or use.

ANY USE OF PRODUCT OUTSIDE OF SPECIFICATIONS OR ANY STORAGE OR INSTALLATION INCONSISTENT WITH PRODUCT GUIDANCE VOIDS ANY WARRANTY.

The Information is intended for use only by customers who have the requisite experience and capability to determine the correct products for their application. Any technical advice inferred from this Information or otherwise provided by KYOCERA AVX with reference to the use of KYOCERA AVX products is given without regard, and KYOCERA AVX assumes no obligation or liability for the advice given or results obtained.

Although KYOCERA AVX designs and manufactures its products to the most stringent quality and safety standards, given the current state of the art, isolated component failures may still occur. Accordingly, customer applications which require a high degree of reliability or safety should employ suitable designs or other safeguards (such as installation of protective circuitry or redundancies) in order to ensure that the failure of an electrical component does not result in a risk of personal injury or property damage.

Unless specifically agreed to in writing, KYOCERA AVX has not tested or certified its products, services or deliverables for use in high risk applications including medical life support, medical device, direct physical patient contact, water treatment, nuclear facilities, weapon systems, mass and air transportation control, flammable environments, or any other potentially life critical uses. Customer understands and agrees that KYOCERA AVX makes no assurances that the products, services or deliverables are suitable for any high-risk uses. Under no circumstances does KYOCERA AVX warrant or guarantee suitability for any customer design or manufacturing process.

Although all product–related warnings, cautions and notes must be observed, the customer should not assume that all safety measures are indicted or that other measures may not be required.

WIRE-TO-BOARD CONNECTORS

Table of Contents

STANDARD 26-28 AWG: 00-9175
General Information 1
2 Position 2
3 Position 3
Accessory Cap - Through Wire 4
Accessory Cap - Wire Stop 5
Hand Insertion Tooling / Clearance Area on PCB for Hand Tooling 6
Insertion Tooling Requires Hand Press with Flat Rock Plates 7

CAPPED IDC 26-28 AWG: 9175-700
General Information 8
2 Position - Through Wire 9
3 Position - Through Wire 10
2 Position - Wire Stop 11
3 Position - Wire Stop 12
Assembly - Through Wire and Wire Stop 13

STANDARD IDC 18-24 AWG: 00-9176
General Information 14
1 Position 16
2 Position 17
3 Position 18
Accessory Cap - Through Wire 19
Accessory Cap - Wire Stop 20
Hand Insertion Tooling for Single 18/24 Gauge Wire 21
Insertion Tooling Requires Hand Press with Flat Rock Plates 22
Hand Insertion Tooling for One Way Cap Insertion / Clearance Area on PCB for Hand Tooling 23
Assembled Connector 24

CAPPED 18-24 AWG: 9176-700
General Information 25
1 Position - Through Wire 26
2 Position - Through Wire 27
3 Position - Through Wire 28
1 Position - Wire Stop 29
2 Position - Wire Stop 30
3 Position - Wire Stop 31
Assembly - Through Wire and Wire Stop 32

SINGLE IDC CONTACT 22-28 AWG: 9176-400
General Information 33
Contact Details 34
PCB Layout 35
Assembly Tooling 36
Cap Details 38

SINGLE IDC CONTACT 18-24 AWG: 9176-500
General Information 39
Contact Details 40
PBC Layout 41
Assembly Tooling 42
Cap Details 44

SINGLE IDC CONTACT 12-18 AWG: 9177-500
General Information 45
Contact Detail 46
IDC Wire to Board Connector Single Contact 47
Assembly Tooling 48

SINGLE TINE PTH 18-24 AWG: 9176-600
General Information 49
1 Position - Through Wire 50
1 Position - Wire Stop 51
Assembly - Through Wire and Wire Stop 52

SINGLE TINE SMT 18-24 AWG: 9176-650
General Information 53
1 Position - Through Wire 54
1 Position - Wire Stop 55
Assembly - Through Wire and Wire Stop 56

LOW PROFILE IDC 22-30 AWG: 9176-800
General Information 57
1 Position 58
2 Position 59
3 Position 60
4 Position 61
Conector Details 62

STANDARD 14-20 AWG: 00-9177
General Information 63
1 Position 65
2 Position 66
3 Position 67
Assessory Cap - Through Wire 68
Assessory Cap - Wire Stop 69
Insertion Tooling 70
Assembled Connector 71

CAPPED THRU HOLE 12-18 AWG: 00-9177
General Information 72
1 Position - Through Wire 73
1 Position - Wire Stop 74

SINGLE THRU HOLE IDC CONTACT 12-18 AWG: 9177-600
General Information 75
Contact Details 76
Assembly Tooling 77
Accessory Cap - Through Wire 78
Accessory Cap - Wire Stop 79

POKE-HOME: HORIZONTAL 18-26 AWG: 00-9276
General Information 80
Wire Assembly/Wire Extraction 81
1 Position 82
2 Position 83
3 Position 84
4 Position 85
6 Position 86
8 Position 87

The Important Information/Disclaimer is incorporated in the catalog where these specifications came from or available online at www.avx.com/disclaimer/ by reference and should be reviewed in full before placing any order.

WIRE-TO-BOARD CONNECTORS

Table of Contents

POKE-HOME: SINGLE HORIZONTAL CONTACT 12-28 AWG: 70-9296

General Information 88
1.7mm 89
2mm 90
2.5mm 91
2.5mm – No Stop 92
3mm 93
4mm 94
Connector Assembly / Contact Opening Tool 95

POKE-HOME: VERTICAL TOP ENTRY 18-26 AWG: 00-9296

General Information 96
1 Position 97
2 Position 98
3 Position 99
4 Position 100
5 Position 101
6 Position 102
Connector Assembly / Contact Opening Tool 103

POKE-HOME: INVERTED THRU BOARD 18-26 AWG: 00-9296

General Information 104
1 Position 105
2 Position 106
3 Position 107
4 Position 108
5 Position 109
6 Position 110
Wire Strip Length 111

SINGLE VERTICAL TOP ENTRY 18 AWG: 58-9296

General Information 112
Single Vertical Top Entry 113

STANDARD VERTICAL TOP ENTRY 18-22AWG

00-9296 114
00-9296 115

POKE-HOME: SINGLE VERTICAL CONTACT 18-24 AWG: 70-9296

General Information 116
Top Side Contact - Bottom Entry Wire (FR4 Board) 117
Through Board Contact - Top Entry Wire (FR4 Board) 118
Top Side Contact - Bottom Entry Wire (Metal Board) 119
Through Board Contact - Top Entry Wire (Metal Board) 120
Wire Trim Details 121

POKE-HOME: MICRO SINGLE VERTICAL CONTACT 22-26 AWG: 70-9296

General Information 122
Top Side Contact - Bottom Entry Wire (FR4 Board) 123
Through Board Contact - Top Entry Wire (FR4 Board) 124
Top Side Contact - Bottom Entry Wire (Metal Board) 125
Through Board Contact - Top Entry Wire (Metal Board) 126
Wire Trim Details 127

POKE-HOME: LOW PROFILE HORIZONTAL 20-26 AWG: 9296-200

General Information 128
1 Position 129
2 Position 130
3 Position 131
4 Position 132
5 Position 133
6 Position 134
Assembly 135

RF COAXIAL IDC 136

The Important Information/Disclaimer is incorporated in the catalog where these specifications came from or available online at www.avx.com/disclaimer/ by reference and should be reviewed in full before placing any order.

STANDARD 26-28 AWG: 00-9175

General Information

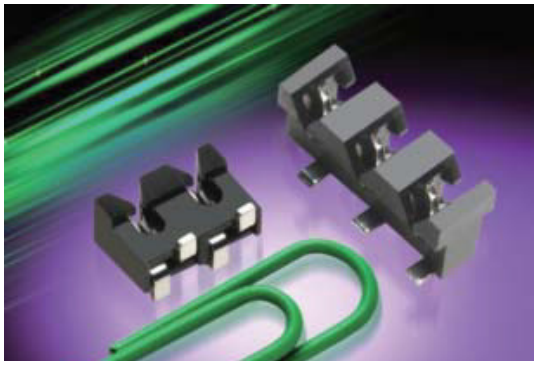

The 917X series of surface mount Insulation Displacement Connectors (IDC) were developed to meet the harsh automotive and industrial market applications for connecting individual wires directly to a PCB ranging from 14 AWG to 28 AWG. This industry proven contact system has been tested to automotive levels of shock, vibration, and temperature cycling to prove their reliability and robustness. The simplicity of inserting a wire into the connector with a small tool allows a wide range of devices to be connected to the PCB without soldering. In SSL applications specifically, these connectors are used to bring power and signal onto the PCB or are used to daisy chain multiple boards together in a long string. While the IDC contact provides a gas-tight connection to conductor of the wire, the housing has been designed to grab the insulation of the wire to provide a positive strain relief even in the harshest conditions. In case of repair, the wires can be removed and replace up to three times.

The 9175 series accepts 26 AWG to 28 AWG wires with an insulation diameter ranging from 0.7mm to 1.0mm. These single contact connectors support a 1 amp current rating and have a split SMT tail design to provide maximum stability on the PCB. Available in a 2p and 3p configuration, these connectors can be end stackable for higher pin counts.

APPLICATIONS

- Connecting discrete wire components directly to the PCB
- Bringing power and signals onto a PCB
- Daisy chaining PCB's together to create a continuous string of boards
- Application Notes: refer to 201-01-124

FEATURES AND BENEFITS

- IDC contact provides a gas-tight connection to the PCB for long term reliability
- Connector housing captures the wire insulation for positive strain relief
- Tested to automotive levels on shock, vibration and temperature cycling for reliability
- Low and high volume assembly tools to match production volumes
- Reduced total applied cost versus solder or crimp processes
- High temperature insulator capable to 260 degrees C reflow soldering processes

ELECTRICAL

- Current Rating: 1 Amp / Contact
- Voltage Rating: 150 VAC

ENVIRONMENTAL

- Operating Temperature: -40°C to +125°C

MECHANICAL

- Insulator Material: Nylon 46: UL94V0
- Contact Material: Phosphor Bronze
- Plating: Tin over Nickel
- Durability: 3 Cycles

HOW TO ORDER

00 — Prefix

9159 — Series

00X — Number of Ways

Code	No of Ways	Details
002	2	Page 4
003	3	Page 5

00X — Wire Gauge Size

Code	Accepted Wire Gauge	Wire Insulation
001	28 Gauge Solid or Stranded	Ø 0.70 to Ø 1.00
002	26 Gauge Solid or Stranded	Ø 0.70 to Ø 1.00

X — Insulator Color

9 = UL White
8 = UL Black
Special Order

06 — Plating Option

06 = Pure Tin all over

RoHS COMPLIANT

CONNECTOR/TOOLING PART NUMBER MATRIX

SERIES 9175 IDC					HAND INSERTION TOOLING*			ACCESSORY CAPS	
AWG	Wire Insulation	Positions	Color	Part Number	Plastic (medium volume)	Metal (high volume)	Mass Termination	Though Wire	Wire Stop
26	Ø 0.7 - 1.0	2p	White	009175002002906	069175701601000	069175701701000	069175701701002	609175002010100	609175002010199
26	Ø 0.7 - 1.0	2p	Black	009175002002806	069175701601000	069175701701000	069175701701002	609175002010000	609175002010099
26	Ø 0.7 - 1.0	3p	White	009175003002906	069175701601000	069175701701000	069175701701003	609175003010100	609175003010199
26	Ø 0.7 - 1.0	3p	Black	009175003002806	069175701601000	069175701701000	069175701701003	609175003010000	609175003010099
28	Ø 0.7 - 1.0	2p	White	009175002001906	069175701601000	069175701701000	069175701701002	609175002010100	609175002010199
28	Ø 0.7 - 1.0	2p	Black	009175002001806	069175701601000	069175701701000	069175701701002	609175002010000	609175002010099
28	Ø 0.7 - 1.0	3p	White	009175003001906	069175701601000	069175701701000	069175701701003	609175003010100	609175003010199
28	Ø 0.7 - 1.0	3p	Black	009175003001806	069175701601000	069175701701000	069175701701003	609175003010000	609175003010099
* Hand Insertion Tooling - Universal Hand Tool 067000773001000; Consult Application Notes 201-01-124									

Certification: UL File #E90723

The Important Information/Disclaimer is incorporated in the catalog where these specifications came from or available online at www.avx.com/disclaimer/ by reference and should be reviewed in full before placing any order.

26-28 AWG 2 WAY IDC CONNECTOR

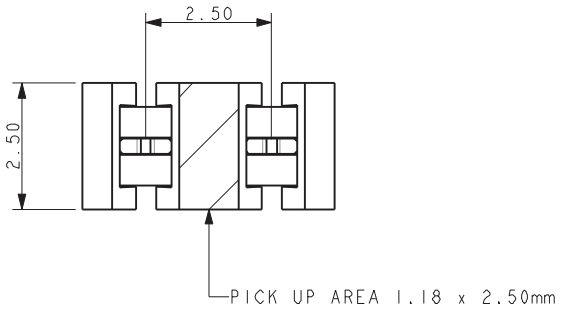

NOTES:
1. CONNECTOR FOR IDC WIRE TO BOARD CONNECTION.
2. CONTACT MATERIAL: PHOSPHOR BRONZE.
   INSULATION MATERIAL: HIGH TEMPERATURE NYLON 46.
   COLOR REFER TO PAGE 3.
3. CONNECTOR DESIGNED TO ACCEPT 26 AND 28 GAUGE SOLID OR STRANDED WIRE.
4. ALL DIMENSIONS FOR REFERENCE UNLESS OTHERWISE STATED.
5. FOR FULL PRODUCT SPECIFICATION ON STANDARD CONNECTORS REFER TO ELCO SPEC 201-01-100, UL COMPONENTS REFER TO ELCO SPEC 201-01-100UL.
6. APPLICATION NOTES 201-01-124.
7. FOR UL PRODUCT CODES UL REFERENCE 390723 (US AND CANADA).
8. CONNECTOR OUTLINE.
9. ALL DIMENSIONS ±0.20 UNLESS TOLERANCE SPECIFIED.

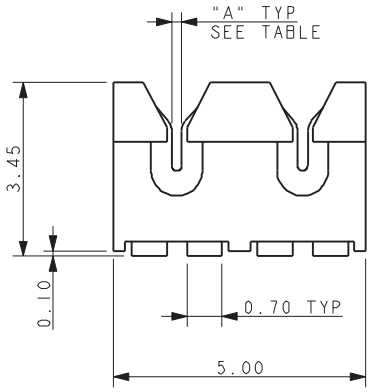

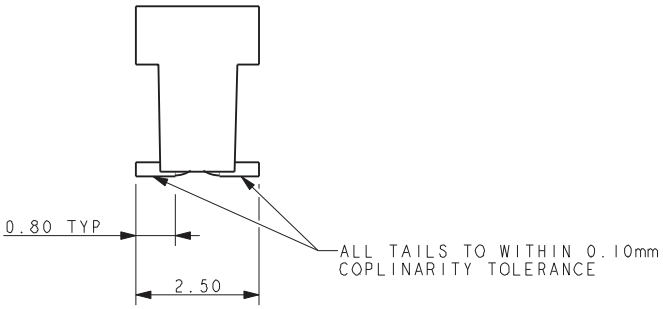

Code	Wire Gauge	A
001	28AWG	0.20
002	26AWG	0.28

SMT PCB LAYOUT

PURE TIN PADS

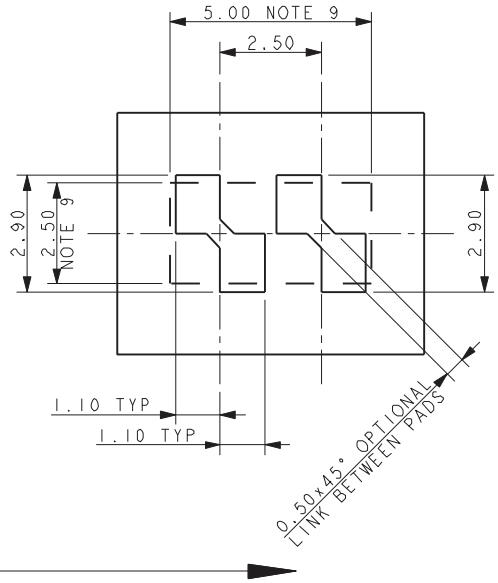

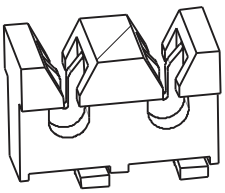

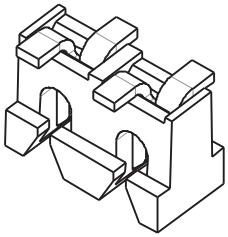

PACKING DETAILS

REEL QTY	2000
LEADER	500MM
TRAILER	500MM

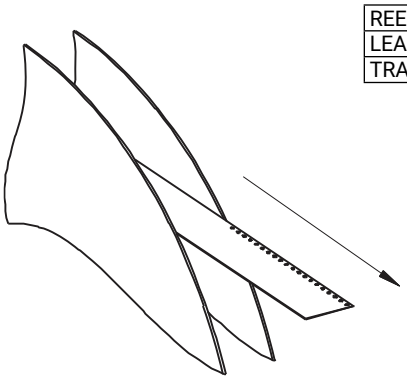

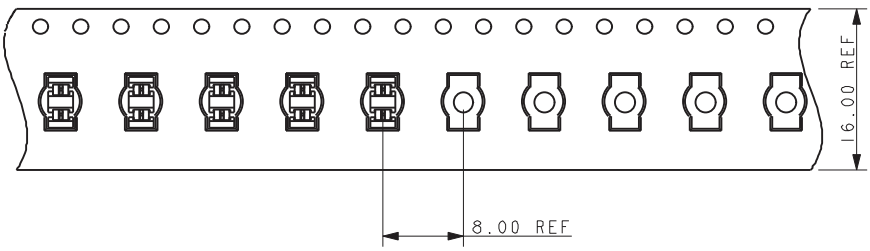

The Important Information/Disclaimer is incorporated in the catalog where these specifications came from or available online at www.avx.com/disclaimer/ by reference and should be reviewed in full before placing any order.

STANDARD 26-28 AWG: 00-9175

3 Position

26-28 AWG 3 WAY IDC CONNECTOR

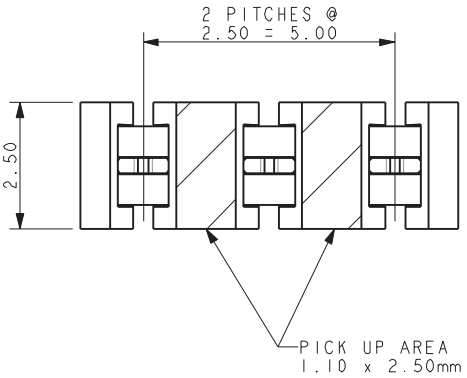

NOTES:

1. CONNECTOR FOR IDC WIRE TO BOARD CONNECTION.
2. CONTACT MATERIAL: PHOSPHOR BRONZE.
   INSULATION MATERIAL: HIGH TEMPERATURE NYLON 46.
   COLOR REFER TO PAGE 3.
3. CONNECTOR DESIGNED TO ACCEPT 26 AND 28 GAUGE SOLID OR STRANDED WIRE.
4. ALL DIMENSIONS FOR REFERENCE UNLESS OTHERWISE STATED.
5. FOR FULL PRODUCT SPECIFICATION ON STANDARD CONNECTORS REFER TO ELCO SPEC 201-01-100, UL COMPONENTS REFER TO ELCO SPEC 201-01-100UL.
6. APPLICATION NOTES 201-01-124.
7. FOR UL PRODUCT CODES UL REFERENCE 390723 (US AND CANADA).
8. CONNECTOR OUTLINE.
9. ALL DIMENSIONS ±0.20 UNLESS TOLERANCE SPECIFIED.

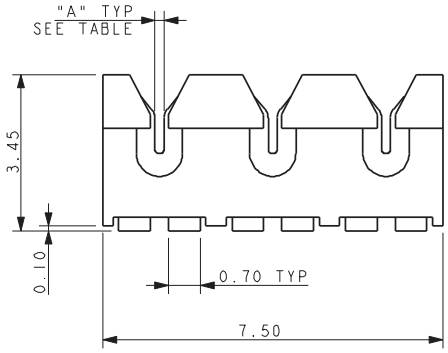

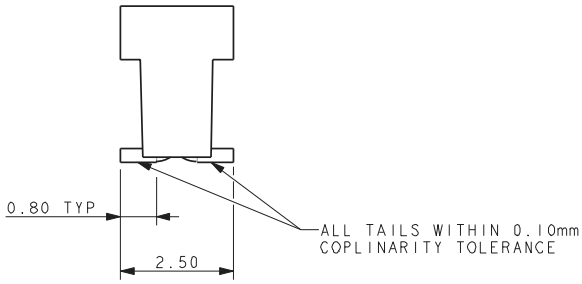

Code	Wire Gauge	A
001	28AWG	0.20
002	26AWG	0.28

SMT PCB LAYOUT

PURE TIN PADS

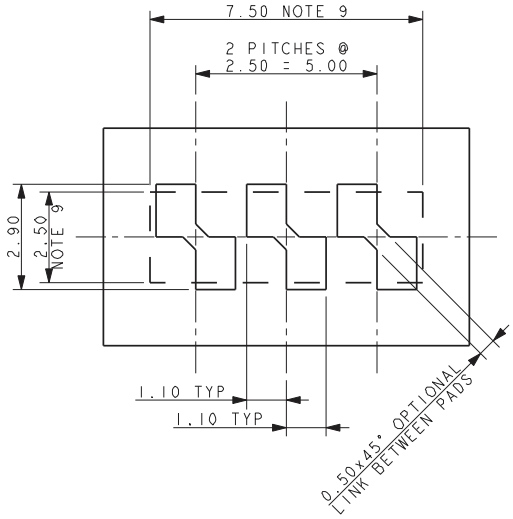

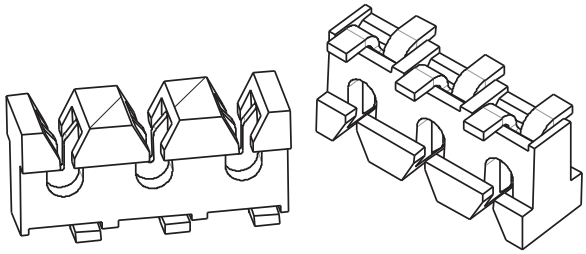

PACKING DETAILS

REEL QTY	2000
LEADER	500MM
TRAILER	500MM

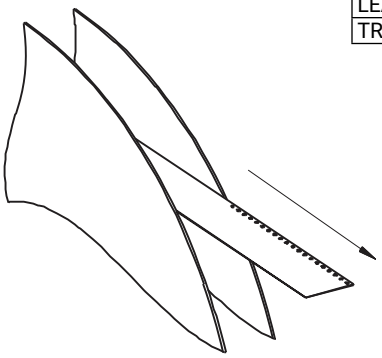

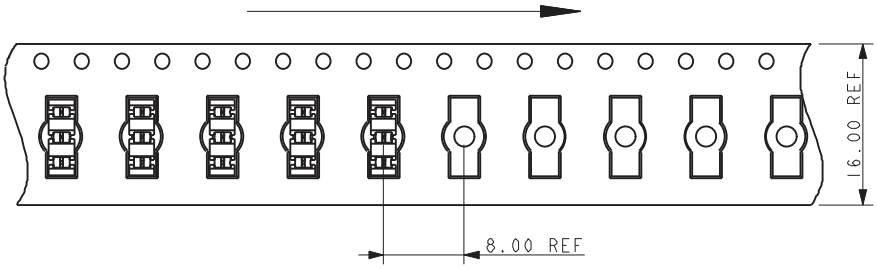

The Important Information/Disclaimer is incorporated in the catalog where these specifications came from or available online at www.avx.com/disclaimer/ by reference and should be reviewed in full before placing any order.

60-9175-00X-010-X00
ACCESSORY CAP – THROUGH WIRE

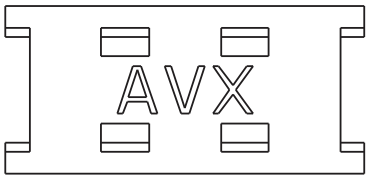

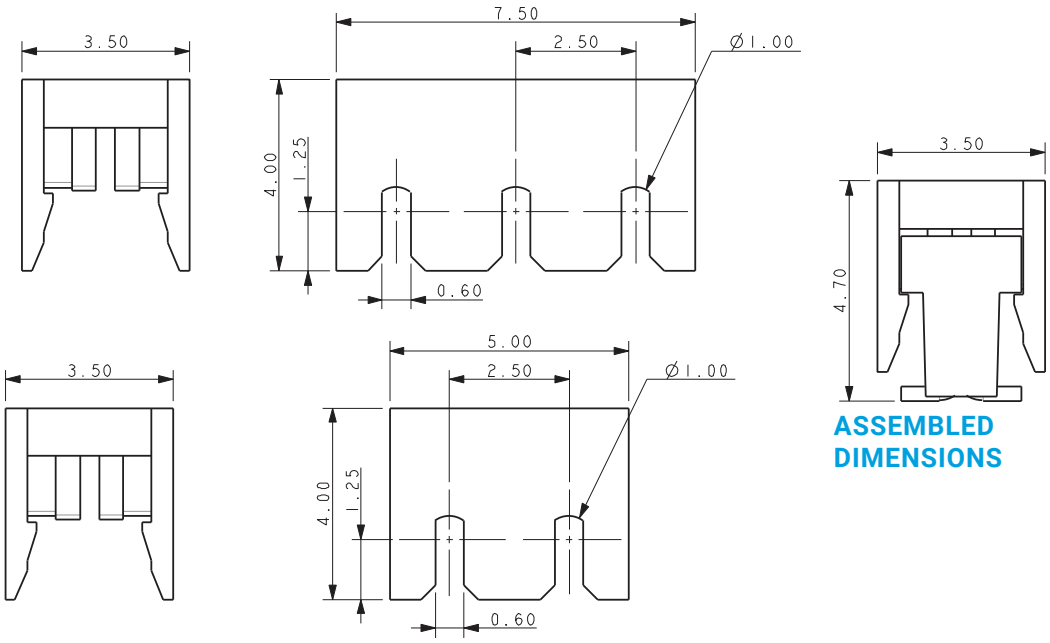

ASSEMBLED DIMENSIONS

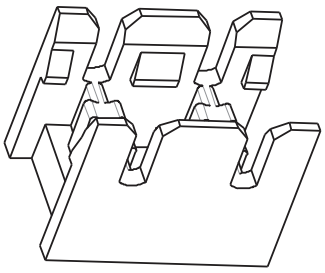

60-9175-002-010-X00

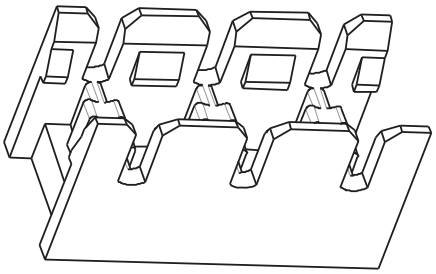

60-9175-003-010-X00

NOTES:
1. CAP FOR IDC WIRE TO BOARD CONNECTION, 2 AND 3 WAY, THROUGH WIRE.
2. THROUGH WIRE CAP CAN BE USED AT ANY POSTION ALONG A WIRE.
3. FOR USE WITH STANDARD 9175 IDC CONNECTORS
4. CAP MATERIAL: GLASS FILLED NYLON 46, FOR COLORS SEE PAGE 3.
5. CAPS DESIGNED TO ACCOMMODATE WIRES WITH INSULATION UP TO 1.00MM DIAMETERS.
6. GENERAL TOLERANCE ±0.20.
7. PACKED IN BAGS, 1000 PIECES PER BAG.
8. ALL DIMENSIONS ±0.20 UNLESS TOLERANCE SPECIFIED.

The Important Information/Disclaimer is incorporated in the catalog where these specifications came from or available online at www.avx.com/disclaimer/ by reference and should be reviewed in full before placing any order.

60-9175-00X-0XX-010-X99
ACCESSORY CAP – WIRE STOP

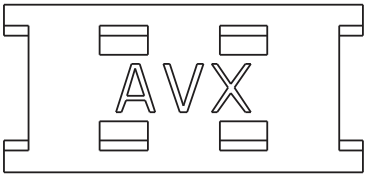

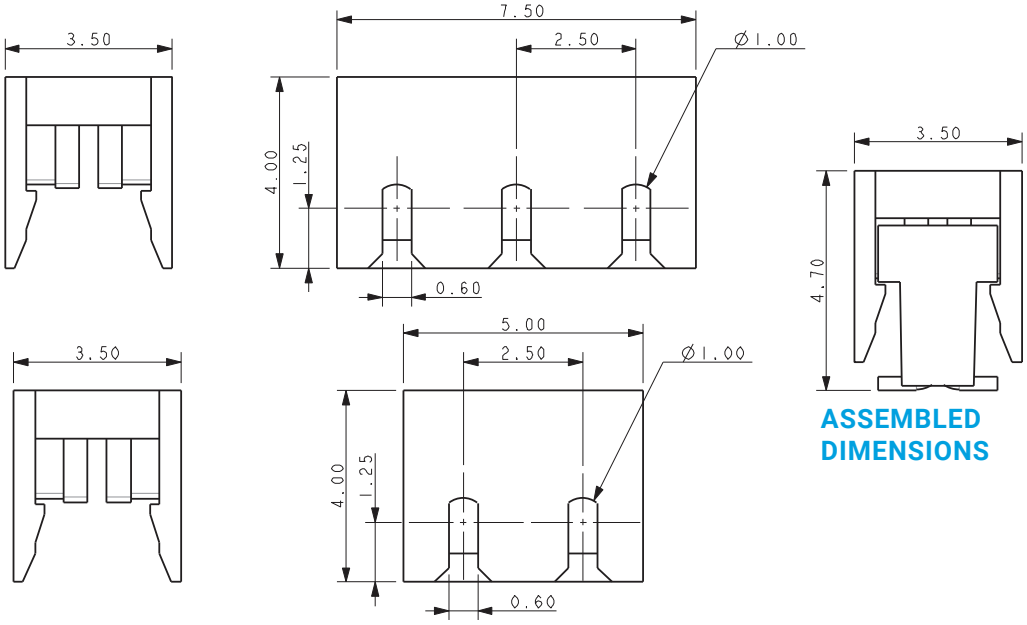

ASSEMBLED DIMENSIONS

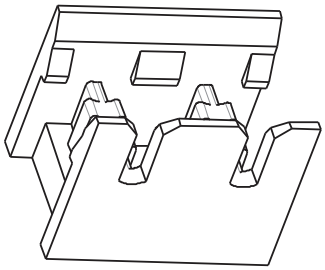

60-9175-002-010-X99

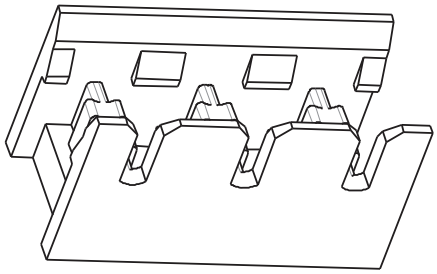

60-9175-003-010-X99

NOTES:
1. CAP FOR IDC WIRE TO BOARD CONNECTION, 2 AND 3 WAY, WIRE STOP.
2. WIRE STOP CAP FOR USE AT WIRE ENDS, STOP FACE PROTECTS THE WIRE ENDS.
3. FOR USE WITH STANDARD 9175 IDC CONNECTORS
4. CAP MATERIAL: GLASS FILLED NYLON 46, FOR COLORS SEE PAGE 3.
5. CAPS DESIGNED TO ACCOMMODATE WIRES WITH INSULATION UP TO 1.00MM DIAMETERS.
6. GENERAL TOLERANCE ±0.20.
7. PACKED IN BAGS, 1000 PIECES PER BAG.
8. ALL DIMENSIONS ±0.20 UNLESS TOLERANCE SPECIFIED.

The Important Information/Disclaimer is incorporated in the catalog where these specifications came from or available online at www.avx.com/disclaimer/ by reference and should be reviewed in full before placing any order.

HAND INSERTION TOOLING
SINGLE WIRE INSERTION TOOL FOR 26/28 GAUGE WIRE

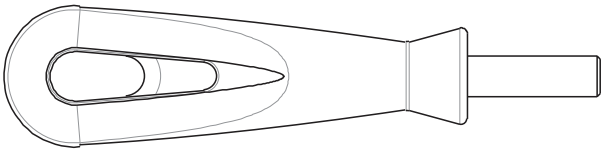

UNIVERSAL HANDLE

Details	Tool Part Number
6.35 A/F HEX BIT HOLDER	06-7000-7730-01-000

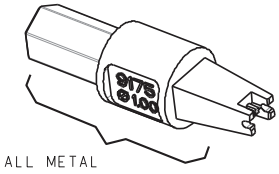

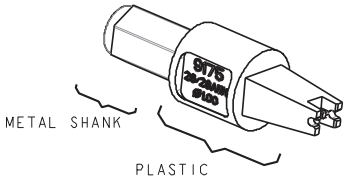

HIGH PRODUCTION
Metal

Max Insulation Dia	Tool Part Number
Ø 1.00	06-9175-7017-01-000

MEDIUM PRODUCTION
Metal/Plastic

Max Insulation Dia	Tool Part Number
Ø 1.00	06-9175-7016-01-000

CLEARANCE AREA ON PCB FOR HAND TOOLING

2 WAY

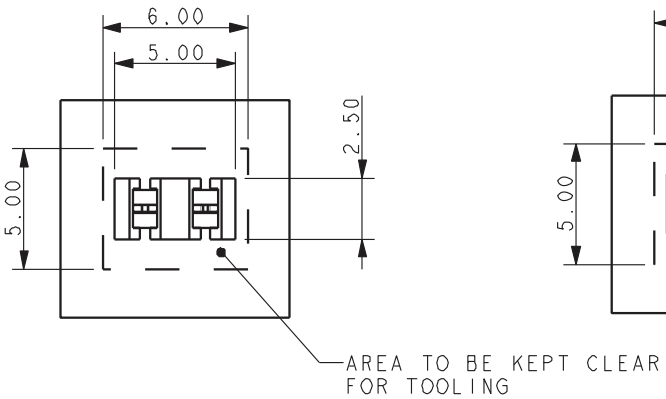

3 WAY

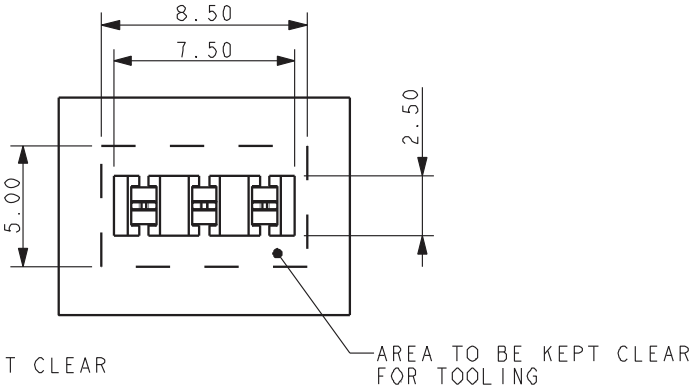

The Important Information/Disclaimer is incorporated in the catalog where these specifications came from or available online at www.avx.com/disclaimer/ by reference and should be reviewed in full before placing any order.

STANDARD 26-28 AWG: 00-9175

Insertion Tooling Requires Hand Press with Flat Rock Plates

INSERTION TOOLING
REQUIRES HAND PRESS WITH FLAT ROCK PLATES

2 WAY TOOL

TOOL NUMBER 06-9175-7017-01-002
SKETCH SHOWS PCB RESTRICTED AREAS FOR ASSEMBLY TOOLING

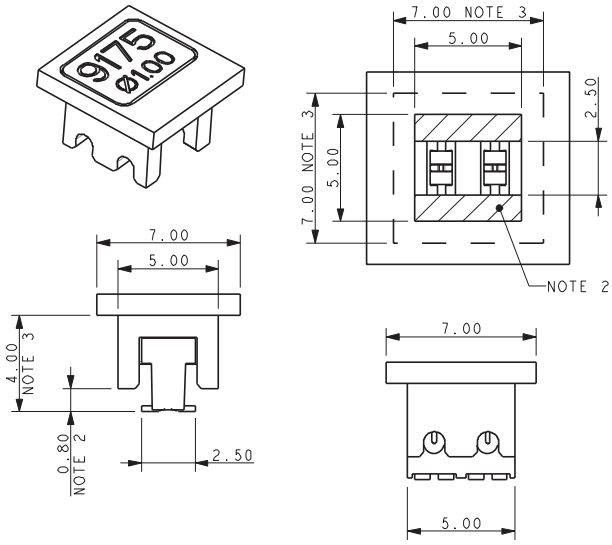

3 WAY TOOL

TOOL NUMBER 06-9175-7017-01-003
SKETCH SHOWS PCB RESTRICTED AREAS FOR ASSEMBLY TOOLING

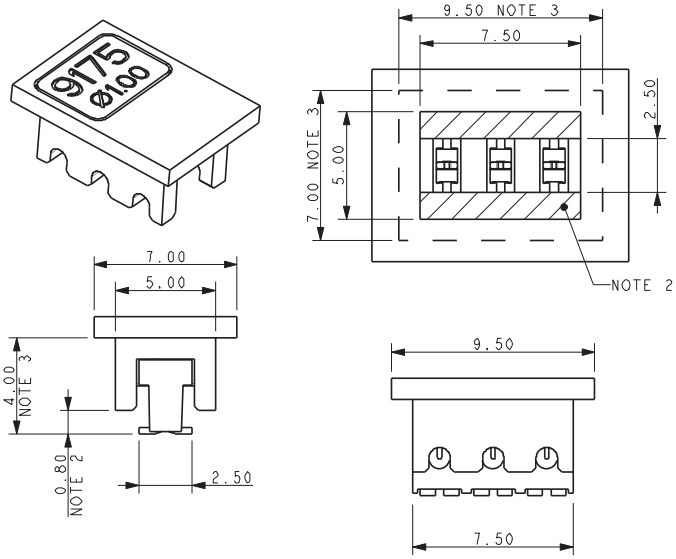

NOTES:
1. DIMENSIONS SHOWN ARE REFERENCE DIMENSIONS.
2. MAXIMUM COMPONENT HEIGHT 0.80MM IN THIS AREA.
3. MAXIMUM COMPONENT HEIGHT 4.00MM IN THIS AREA.
4. THE SAME RESTRICTIONS APPLY TO ALL WIRE INSULATION DIAMETERS.

ASSEMBLED CONNECTOR

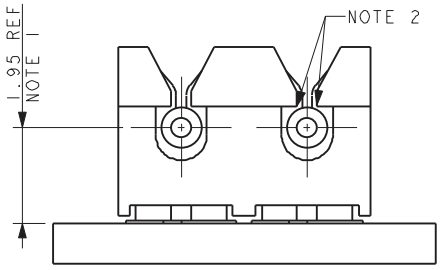

STANDARD CONNECTOR

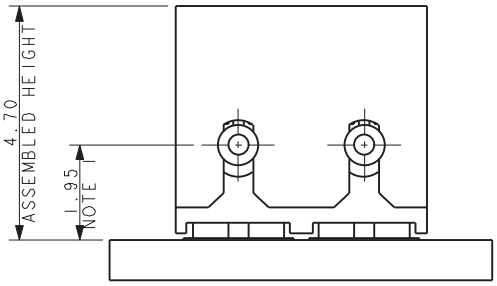

CONNECTOR WITH CAP

NOTES:
1. ASSEMBLED HEIGHTS INCLUDE A 0.10MM ALLOWANCE FOR PAD AND SOLDER THICKNESS, NO ALLOWANCE HAS BEEN MADE FOR ANY SOLDER RESIST OR OTHER FEATURES.
2. WHEN THE WIRE IS ASSEMBLED THE INSULATION SHOULD BE TRAPPED BY THESE EDGES.

The Important Information/Disclaimer is incorporated in the catalog where these specifications came from or available online at www.avx.com/disclaimer/ by reference and should be reviewed in full before placing any order.

CAPPED IDC 26-28 AWG: 9175-700

General Information

The market and applications for simple and reliable discrete Wire-to-Board connectors continue to evolve. KYOCERA AVX first introduced the 9175 series of surface mountable Insulation Displacement Connectors (IDC) in 2006. Developed for harsh industrial and automotive applications, these connectors have been used in hundreds of applications from today's "Smart Meter" all the way down to a simple sensor termination to a PCB. Size and performance has been one of the key factors for selecting this connector in terminating 26-28AWG wires to a PCB.

The next generation of IDC connector moves beyond all of the technical and performance attributes to address the "User Friendliness" of the product. By changing the insulator from acting as a connector body and make it more like a contact carrier, the insulator becomes the wire location and insertion aid without any special tools. The wire is just inserted into the cap (no stripping required) and then pressed down to provide a secure "Gas Tight" termination. This configuration simplifies and cost reduces the entire wire termination process for connecting discrete wires to a PCB.

APPLICATIONS

- Connecting discrete wire components to a PCB
- Bringing power and signals onto a PCB
- Daisy chaining PCB's together to create a continuous string
- Reference Product Specification 201-01-140

FEATURES AND BENEFITS

- IDC contact provides a gas-tight connection to the PCB for long term reliability
- Plastic cap retains the contacts in position prior to automatic placement, then acts as the assembly tool to terminate the wires; no special tooling.
- Tested to automotive levels on shock, vibration and temperature cycling for reliability
- Identical contact and footprint pattern to the existing 9175 for full backward compatibility and functionality
- The IDC contact reduces the total applied cost versus solder or crimp processes
- Connectors are available in two configurations for maximum flexibility; End and Through Wire

ELECTRICAL

- Current Rating: 1 Amps / Contact
- Voltage Rating: 150 VAC

ENVIRONMENTAL

- Operating Temperature: -40°C to +125°C

MECHANICAL

- Insulator Material: Nylon UL94VO
- Contact Material: Phosphor Bronze
- Plating: Tin over Nickel

HOW TO ORDER

00 — Prefix

9175 — Series

00X — Number of Ways

Code	No of Ways	Details
002	2	Pages 11 & 13
003	3	Pages 12 & 14

70X — Wire Gauge Size, Cap Pre-Assembled

Code	Accepted Wire Gauge	Wire Insulation
701	28 Gauge Solid or Stranded	Min Ø 0.70
		Ma x Ø 1.00
702	26 Gauge Solid or Stranded	Min Ø 0.80
		Max Ø 1.20

X — Insulator Color

9 = UL White
8 = UL Black
Special Order

X — Cap Options

Code	Cap Option	Description	Detail
0	Through Wire	Allows wire to be terminated at any point	Page 11 -12
9	Wire Stop	Terminates end of wire End Protected by stop face	Pages 13-14

6 — Plating Option

6 = Pure Tin all over

RoHS COMPLIANT

Certification: UL File #E90723

The Important Information/Disclaimer is incorporated in the catalog where these specifications came from or available online at www.avx.com/disclaimer/ by reference and should be reviewed in full before placing any order.

26-28 AWG 2 WAY IDC CONNECTOR THROUGH WIRE CAPPED IDC

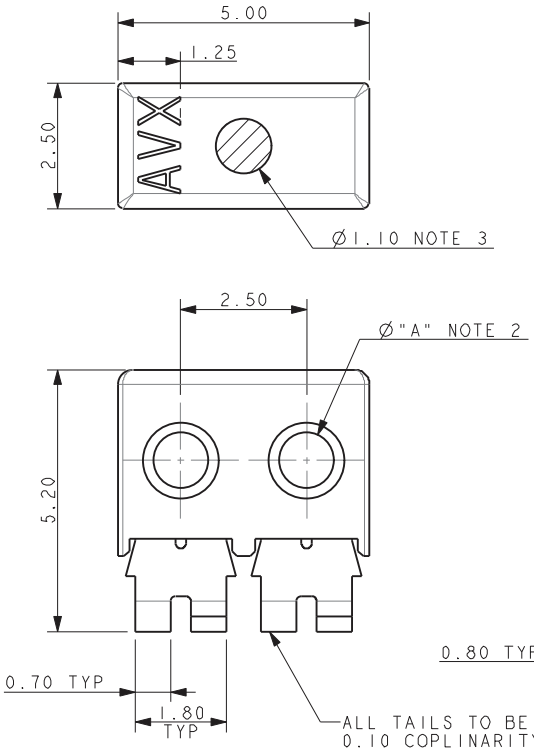

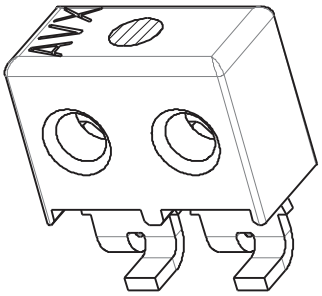

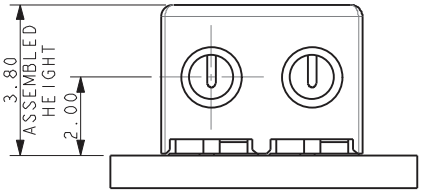

MOUNTED ON PCB

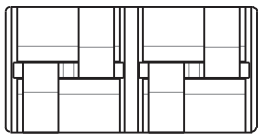

Code	Wire Gauge	Diameter A
701	28AWG	1.10
702	26AWG	1.30

NOTES:

1. 2 WAY CONNECTOR FOR IDC WIRE TO BOARD CONNECTION. PRE-ASSEMBLED THROUGH WIRE CAP.
2. CONTACT/CAP TO MATCH 26AWG AND 28AWG WIRES. SOLID OR STRANDED CONDUCTOR. MAXIMUM INSULATOR 1.00 MM DIAMETER.
3. FLAT FACE ON TOP OF CAP TO AID PICK AND PLACE ASSEMBLY.
4. FOR FULL PRODUCT SPECIFICATION ON STANDARD CONNECTORS REFER TO ELCO SPEC 201-01-139. UL COMPONENTS REFER TO ELCO SPEC 201-01-139UL.
5. ASSEMBLY PROCEDURE, REFER TO APPLICATION NOTES 201-01-140.
6. GENERAL TOLERANCE ±0.20 UNLESS STATED.
7. PACKED IN TAPE AND REEL, QUANTITY PER REEL 1000.
8. CONNECTOR OUTLINE.
9. CONTACT MATERIAL: TIN PLATED COPPER ALLOY.
10. INSULATOR MATERIAL: HIGH TEMPERATURE NYLON, GLASS FILLED, UL94 V-0. COLOR REFER TO PAGE 10.
11. FOR UL CODES UL REFERENCE E90723 (US AND CANADA).

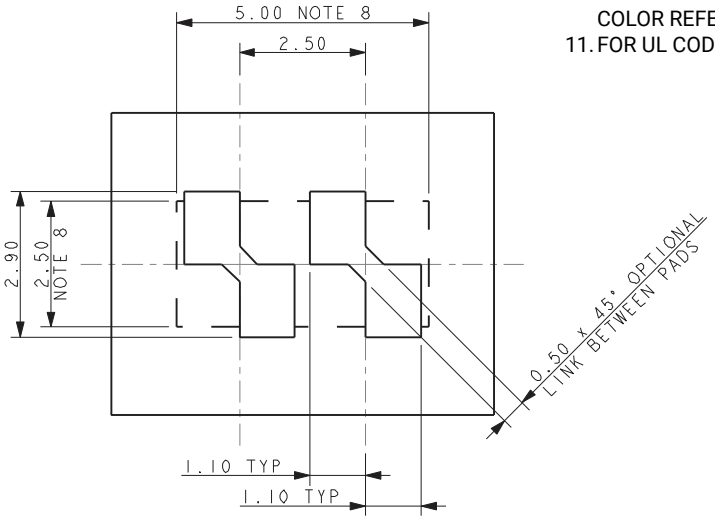

SUGGEST PCB LAYOUT

PACKING DETAILS

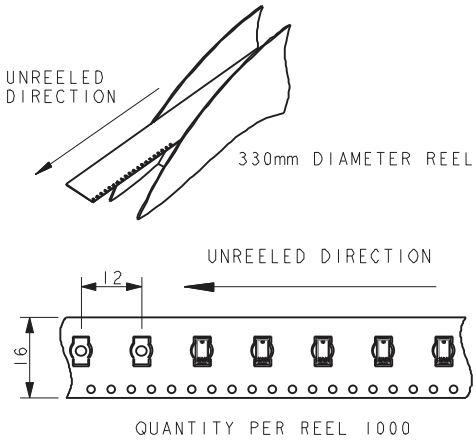

The Important Information/Disclaimer is incorporated in the catalog where these specifications came from or available online at www.avx.com/disclaimer/ by reference and should be reviewed in full before placing any order.

26-28 AWG 3 WAY IDC CONNECTOR THROUGH WIRE CAPPED IDC

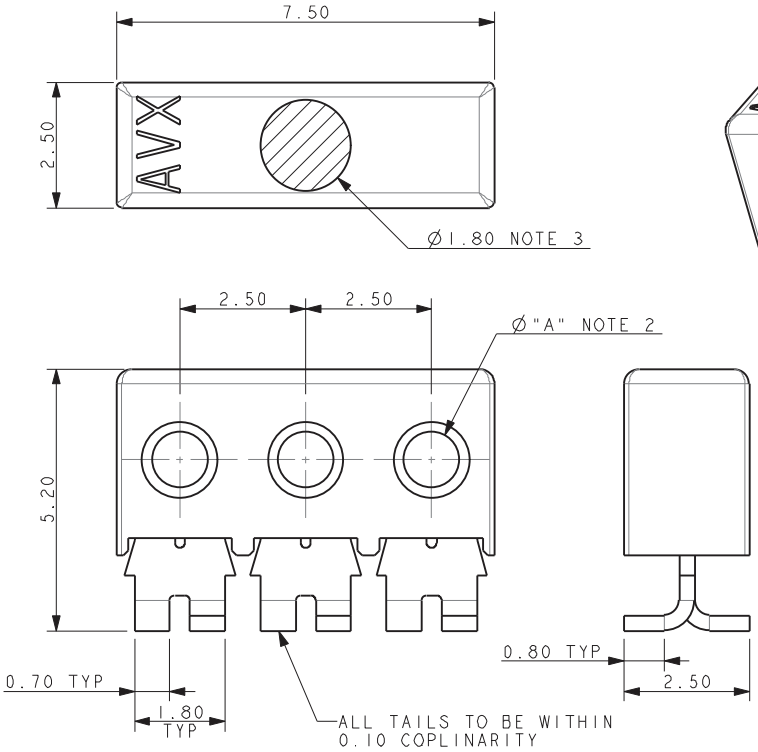

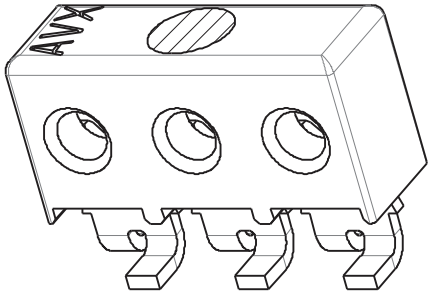

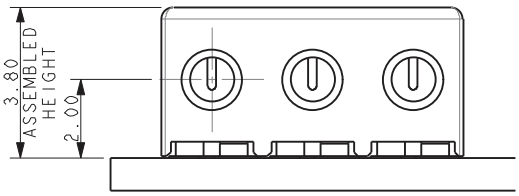

MOUNTED ON PCB

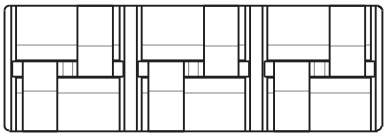

Code	Wire Gauge	Diameter A
701	28AWG	1.10
702	26AWG	1.30

NOTES:
1. WAY CONNECTOR FOR IDC WIRE TO BOARD CONNECTION. PRE-ASSEMBLED THROUGH WIRE CAP.
2. CONTACT/CAP TO MATCH 26AWG AND 28AWG WIRES. SOLID OR STRANDED CONDUCTOR. MAXIMUM INSULATOR 1.00 MM DIAMETER.
3. FLAT FACE ON TOP OF CAP TO AID PICK AND PLACE ASSEMBLY.
4. FOR FULL PRODUCT SPECIFICATION ON STANDARD CONNECTORS REFER TO ELCO SPEC 201-01-139. UL COMPONENTS REFER TO ELCO SPEC 201-01-139UL.
5. ASSEMBLY PROCEDURE, REFER TO APPLICATION NOTES 201-01-140.
6. GENERAL TOLERANCE ±0.20 UNLESS STATED.
7. PACKED IN TAPE AND REEL, QUANTITY PER REEL 1000.
8. CONNECTOR OUTLINE.
9. CONTACT MATERIAL: TIN PLATED COPPER ALLOY.
10. INSULATOR MATERIAL: HIGH TEMPERATURE NYLON, GLASS FILLED, UL94 V-0. COLOR REFER TO PAGE 10.
11. FOR UL CODES UL REFERENCE E90723 (US AND CANADA).

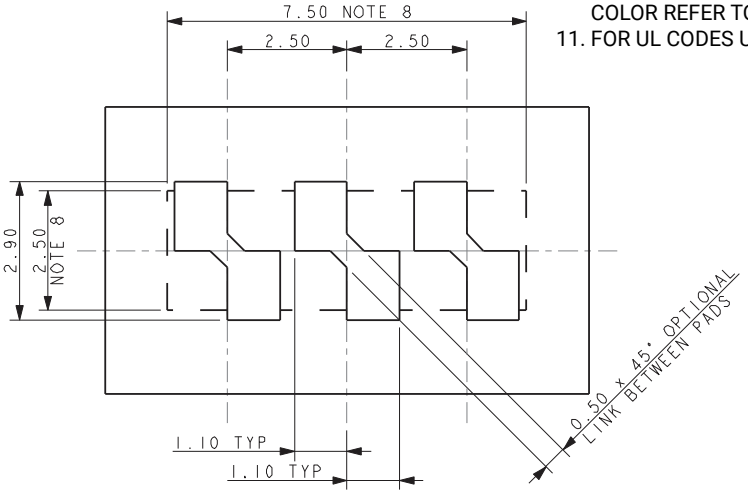

SUGGEST PCB LAYOUT

PACKING DETAILS

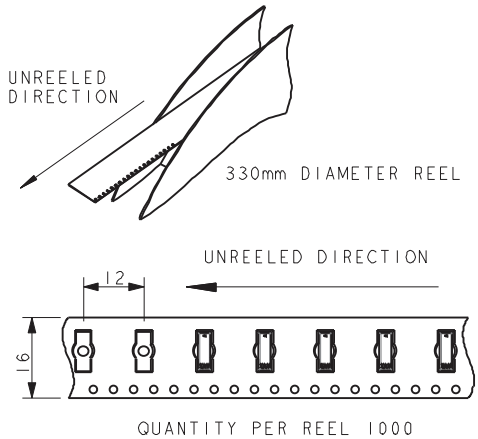

The Important Information/Disclaimer is incorporated in the catalog where these specifications came from or available online at www.avx.com/disclaimer/ by reference and should be reviewed in full before placing any order.

CAPPED IDC 26-28 AWG: 9175-700

2 Position - Wire Stop

26-28 AWG 2 WAY IDC CONNECTOR WIRE STOP CAPPED IDC

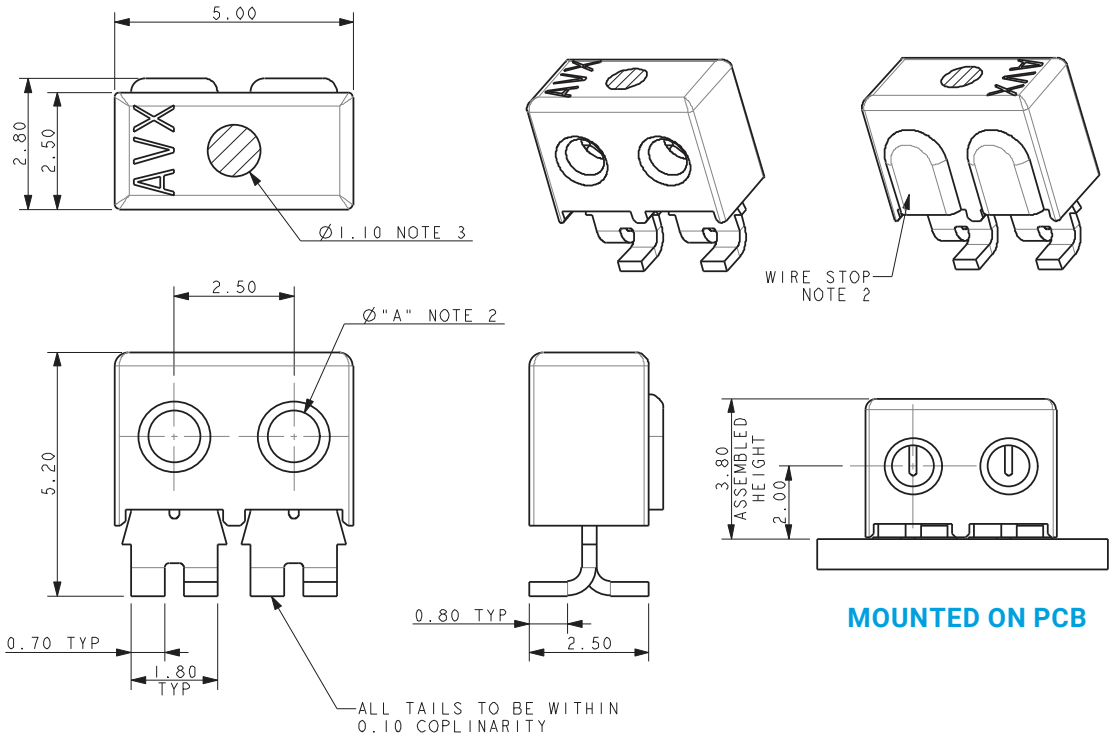

MOUNTED ON PCB

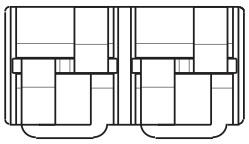

Code	Wire Gauge	Diameter A
701	28AWG	1.10
702	26AWG	1.30

NOTES:

1. 2 WAY CONNECTOR FOR IDC WIRE TO BOARD CONNECTION. PRE-ASSEMBLED WIRE STOP CAP.
2. WIRE STOP CAP PROTECTS END OF WIRE.
3. CONTACT/CAP TO MATCH 26AWG AND 28AWG WIRES. SOLID OR STRANDED CONDUCTOR. MAXIMUM INSULATOR 1.00 MM DIAMETER.
4. FLAT FACE ON TOP OF CAP TO AID PICK AND PLACE ASSEMBLY.
5. FOR FULL PRODUCT SPECIFICATION ON STANDARD CONNECTORS REFER TO ELCO SPEC 201-01-139. UL COMPONENTS REFER TO ELCO SPEC 201-01-139UL.
6. ASSEMBLY PROCEDURE, REFER TO APPLICATION NOTES 201-01-140.
7. GENERAL TOLERANCE ±0.20 UNLESS STATED.
8. PACKED IN TAPE AND REEL, QUANTITY PER REEL 1000.
9. CONNECTOR OUTLINE.
10. CONTACT MATERIAL: TIN PLATED COPPER ALLOY.
11. INSULATOR MATERIAL: HIGH TEMPERATURE NYLON, GLASS FILLED, UL94 V-0. COLOR REFER TO PAGE 10.
12. FOR UL CODES UL REFERENCE E90723 (US AND CANADA).

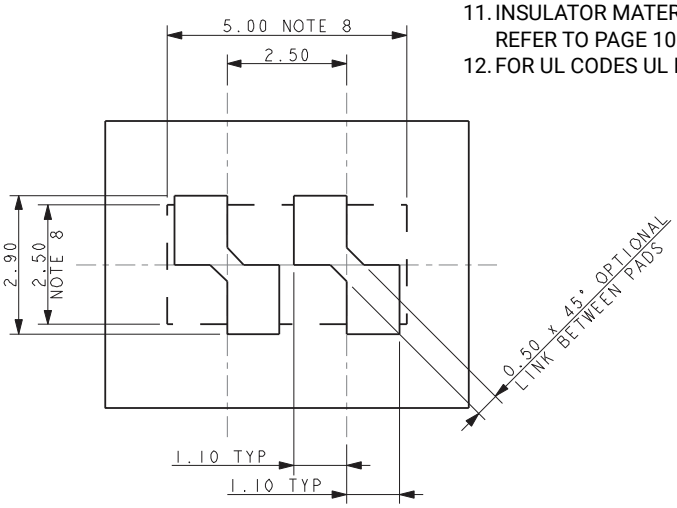

SUGGEST PCB LAYOUT

PACKING DETAILS

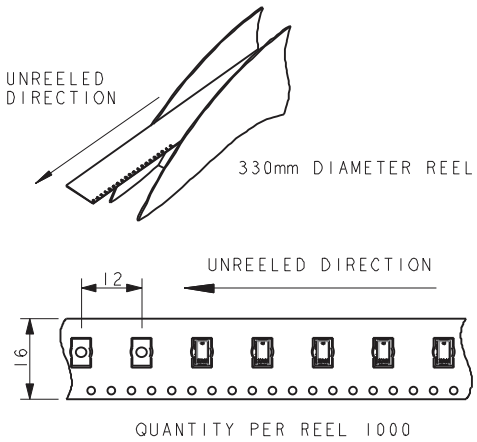

The Important Information/Disclaimer is incorporated in the catalog where these specifications came from or available online at www.avx.com/disclaimer/ by reference and should be reviewed in full before placing any order.

CAPPED IDC 26-28 AWG: 9175-700

3 Position - Wire Stop

26-28 AWG 3 WAY IDC CONNECTOR WIRE STOP CAPPED IDC

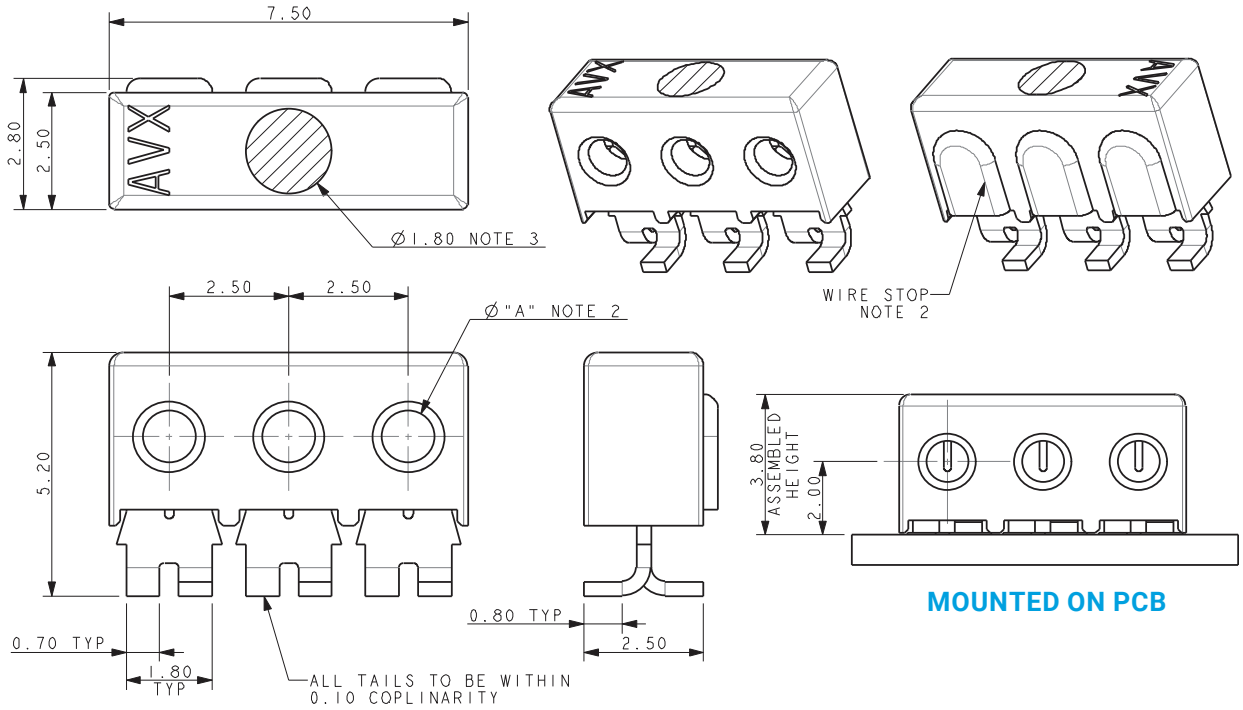

MOUNTED ON PCB

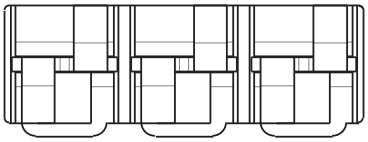

Code	Wire Gauge	Diameter A
701	28AWG	1.10
702	26AWG	1.30

NOTES:

1. 3 WAY CONNECTOR FOR IDC WIRE TO BOARD CONNECTION. PRE-ASSEMBLED WIRE STOP CAP.
2. WIRE STOP CAP PROTECTS END OF WIRE.
3. CONTACT/CAP TO MATCH 26AWG AND 28AWG WIRES. SOLID OR STRANDED CONDUCTOR. MAXIMUM INSULATOR 1.00 MM DIAMETER.
4. FLAT FACE ON TOP OF CAP TO AID PICK AND PLACE ASSEMBLY.
5. FOR FULL PRODUCT SPECIFICATION ON STANDARD CONNECTORS REFER TO ELCO SPEC 201-01-139. UL COMPONENTS REFER TO ELCO SPEC 201-01-139UL.
6. ASSEMBLY PROCEDURE, REFER TO APPLICATION NOTES 201-01-140.
7. GENERAL TOLERANCE ±0.20 UNLESS STATED.
8. PACKED IN TAPE AND REEL, QUANTITY PER REEL 1000.
9. CONNECTOR OUTLINE.
10. CONTACT MATERIAL: TIN PLATED COPPER ALLOY.
11. INSULATOR MATERIAL: HIGH TEMPERATURE NYLON, GLASS FILLED, UL94 V-0. COLOR REFER TO PAGE 10.
12. FOR UL CODES UL REFERENCE E90723 (US AND CANADA).

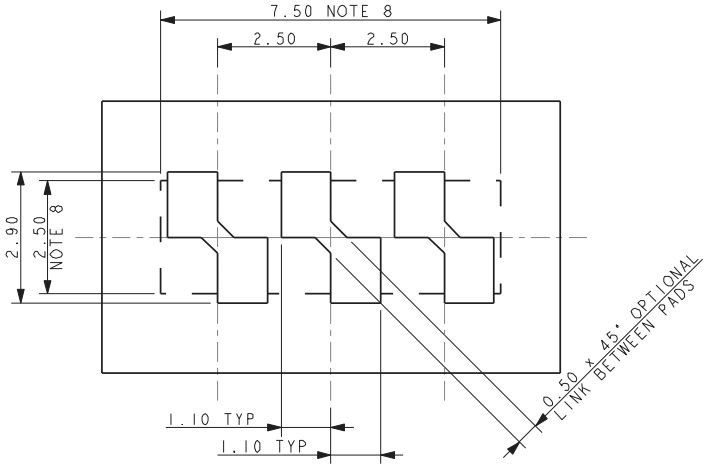

SUGGEST PCB LAYOUT

PACKING DETAILS

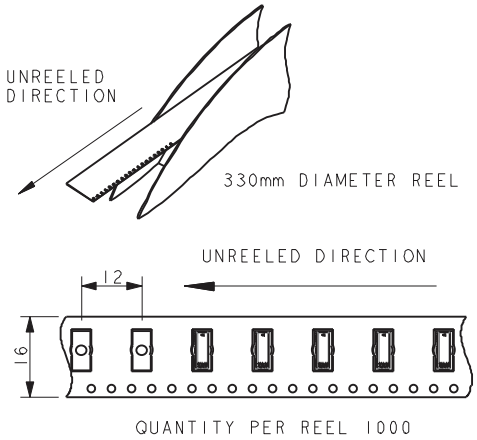

The Important Information/Disclaimer is incorporated in the catalog where these specifications came from or available online at www.avx.com/disclaimer/ by reference and should be reviewed in full before placing any order.

26-28 AWG ASSEMBLED CAPPED IDC CONNECTORS

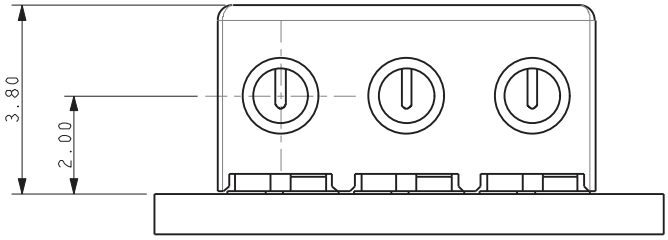

MOUNTED ON PCB

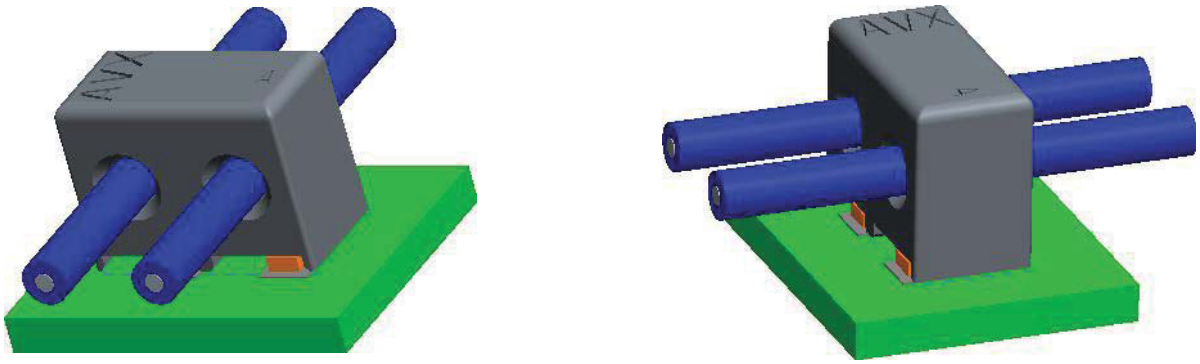

TYPICAL THROUGH WIRE ASSEMBLY

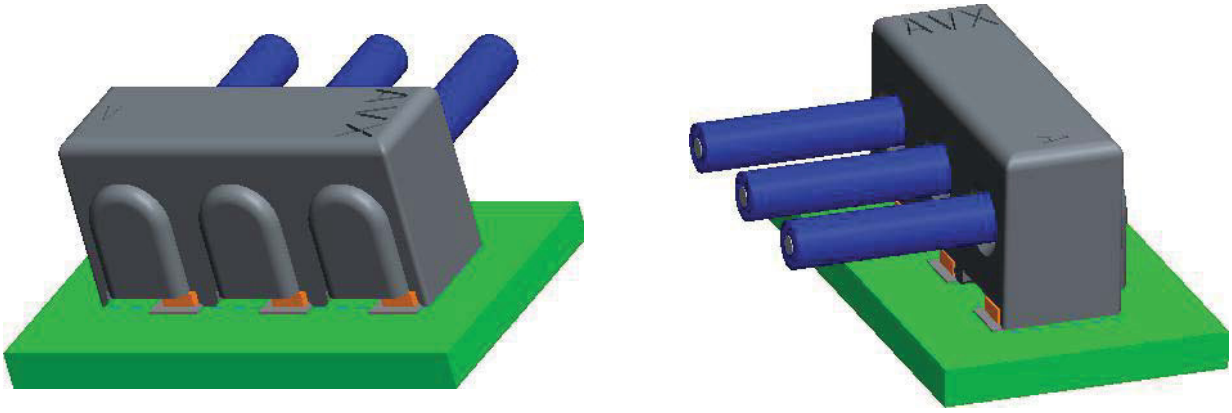

TYPICAL WIRE STOP ASSEMBLY

The Important Information/Disclaimer is incorporated in the catalog where these specifications came from or available online at www.avx.com/disclaimer/ by reference and should be reviewed in full before placing any order.

STANDARD IDC 18-24 AWG: 00-9176

General Information

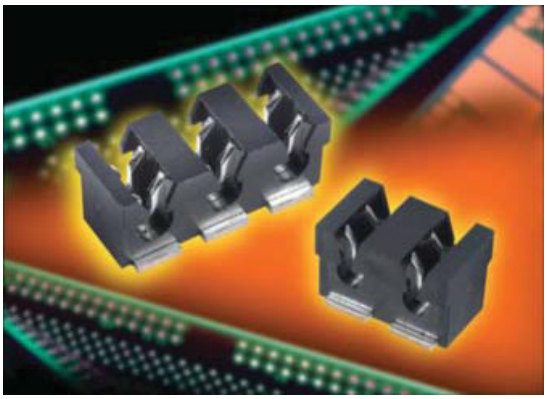

The 917X series of surface mount Insulation Displacement Connectors (IDC) were developed to meet the harsh automotive and industrial market applications for connecting individual wires directly to a PCB ranging from 14 AWG to 28 AWG. This industry proven contact system has been tested to automotive levels of shock, vibration, and temperature cycling to prove their reliability and robustness. The simplicity of inserting a wire into the connector with a small tool allows a wide range of devices to be connected to the PCB without soldering. In SSL applications specifically, these connectors are used to bring power and signal onto the PCB or are used to daisy chain multiple boards together in a long string. While the IDC contact provides a gas-tight connection to conductor of the wire, the housing has been designed to grab the insulation of the wire to provide a positive strain relief even in the harshest conditions. In case of repair, the wires can be removed and replace up to three times.

The 9176 series accepts 18 AWG to 24 AWG wires with an insulation diameter ranging from 1.1mm to 2.1mm. These dual contact connectors support a 10 amp current rating with two large SMT solder tails per wire to provide maximum stability on the PCB. Available in 1p-3p configuration, these connectors can be end stackable for higher pin counts. The 9176 series also comes with optional locking strain relief caps that act as the termination tool for severe vibration applications.

APPLICATIONS

- Connecting discrete wire components directly to the PCB
- Bringing power and signals onto a PCB
- Daisy chaining PCB's together to create a continuous string of boards
- Application Notes: refer to 201-01-124

FEATURES AND BENEFITS

- IDC contact provides a gas-tight connection to the PCB for long term reliability
- Connector housing captures the wire insulation for positive strain relief
- Tested to automotive levels on shock, vibration and temperature cycling for reliability
- Low and high volume assembly tools to match production volumes
- Reduced total applied cost versus solder or crimp processes
- Optional thru and end caps lock in place to provide maximum strain relief
- High temperature insulator capable to 260ºC reflow soldering processes

ELECTRICAL

- Current Rating: 10 Amp / Contact
- Voltage Rating: 300 VAC

ENVIRONMENTAL

- Operating Temperature: -40ºC to +125ºC

MECHANICAL

- Insulator Material: Nylon 46: UL94V0
- Contact Material: Phosphor Bronze
- Plating: Tin over Nickel
- Durability: 3 Cycles

HOW TO ORDER

00 — **Prefix**

9175 — **Series**

00X — **Number of Ways**
001 = 1
002 = 2
003 = 3

0XX — **Wire Gauge Size**

Code	Accepted Wire Gauge	Wire Insulation	Cap Code Pages 21-22
001	18 Gauge Stranded	Ø 1.6-2.1	021
011	20 Gauge Solid or Stranded	Ø 1.6-2.1	021
022	22 Gauge Solid or Stranded	Ø 1.1-1.6	016
032	24 Gauge Solid or Stranded	Ø 1.1-1.6	016

X — **Insulator Color**
All Sizes
9 = UL White (Standard)
8 = UL Black (Special Order)

One Way Only (Special Order)
2 = UL Brown
3 = UL Blue
4 = UL Yellow
5 = UL Red
6 = UL Green
7 = UL Orange

06 — **Plating Option**
6 = Pure Tin all over

RoHS COMPLIANT

Certification: UL File #E90723

The Important Information/Disclaimer is incorporated in the catalog where these specifications came from or available online at www.avx.com/disclaimer/ by reference and should be reviewed in full before placing any order.

CONNECTOR/TOOLING PART NUMBER MATRIX

SERIES 9176 IDC					HAND INSERTION TOOLING*			ACCESSORY CAPS	
AWG	Wire Insulation	Positions	Color	Part Number	Plastic (medium volume)	Metal (high volume)	Mass Termination	Though Wire	Wire Stop
18	Ø 1.6 - 2.1	1p	Black	009176001001806	069176701601000	069176701701000	N/A	609176001021000	609176001021099
18	Ø 1.6 - 2.1	1p	White	009176001001906	069176701601000	069176701701000	N/A	609176001021100	609176001021199
18	Ø 1.6 - 2.1	2p	Black	009176002001806	069176701601000	069176701701000	069176701701002	609176002021000	609176002021099
18	Ø 1.6 - 2.1	2p	White	009176002001906	069176701601000	069176701701000	069176701701002	609176002021100	609176002021199
18	Ø 1.6 - 2.1	3p	Black	009176003001806	069176701601000	069176701701000	069176701701003	609176003021000	609176003021099
18	Ø 1.6 - 2.1	3p	White	009176003001906	069176701601000	069176701701000	069176701701003	609176003021100	609176003021199
20	Ø 1.6 - 2.1	1p	Black	009176001011806	069176701601000	069176701701000	N/A	609176001021000	609176001021099
20	Ø 1.6 - 2.1	1p	White	009176001011906	069176701601000	069176701701000	N/A	609176001021100	609176001021199
20	Ø 1.6 - 2.1	2p	Black	009176002011806	069176701601000	069176701701000	069176701701002	609176002021000	609176002021099
20	Ø 1.6 - 2.1	2p	White	009176002011906	069176701601000	069176701701000	069176701701002	609176002021100	609176002021199
20	Ø 1.6 - 2.1	3p	Black	009176003011806	069176701601000	069176701701000	069176701701003	609176003021000	609176003021099
20	Ø 1.6 - 2.1	3p	White	009176003011906	069176701601000	069176701701000	069176701701003	609176003021100	609176003021199
22	Ø 1.1 - 1.6	1p	Black	009176001022806	069176701602000	069176701702000	N/A	609176001016000	609176001016099
22	Ø 1.1 - 1.6	1p	White	009176001022906	069176701602000	069176701702000	N/A	609176001016100	609176001016199
22	Ø 1.1 - 1.6	2p	Black	009176002022806	069176701602000	069176701702000	069176701702002	609176002016000	609176002016099
22	Ø 1.1 - 1.6	2p	White	009176002022906	069176701602000	069176701702000	069176701702002	609176002016100	609176002016199
22	Ø 1.1 - 1.6	3p	Black	009176003022806	069176701602000	069176701702000	069176701702003	609176003016000	609176003016099
22	Ø 1.1 - 1.6	3p	White	009176003022906	069176701602000	069176701702000	069176701702003	609176003016100	609176003016199
24	Ø 1.1 - 1.6	1p	White	009176001032106	069176701602000	069176701702000	N/A	609176001016100	609176001016199
24	Ø 1.1 - 1.6	1p	Black	009176001032806	069176701602000	069176701702000	N/A	609176001016000	609176001016099
24	Ø 1.1 - 1.6	1p	White	009176001032906	069176701602000	069176701702000	N/A	609176001016100	609176001016199
24	Ø 1.1 - 1.6	2p	Black	009176002032806	069176701602000	069176701702000	069176701702002	609176002016000	609176002016099
24	Ø 1.1 - 1.6	2p	White	009176002032906	069176701602000	069176701702000	069176701702002	609176002016100	609176002016199
24	Ø 1.1 - 1.6	3p	Black	009176003032806	069176701602000	069176701702000	069176701702003	609176003016000	609176003016099
24	Ø 1.1 - 1.6	3p	White	009176003032906	069176701602000	069176701702000	069176701702003	609176003016100	609176003016199

* Hand Insertion Tooling - Universal Hand Tool 067000773001000; Consult Application Notes 201-01-124

The Important Information/Disclaimer is incorporated in the catalog where these specifications came from or available online at www.avx.com/disclaimer/ by reference and should be reviewed in full before placing any order.

STANDARD IDC 18-24 AWG: 00-9176

1 Position

18-24 AWG 1 WAY IDC CONNECTOR

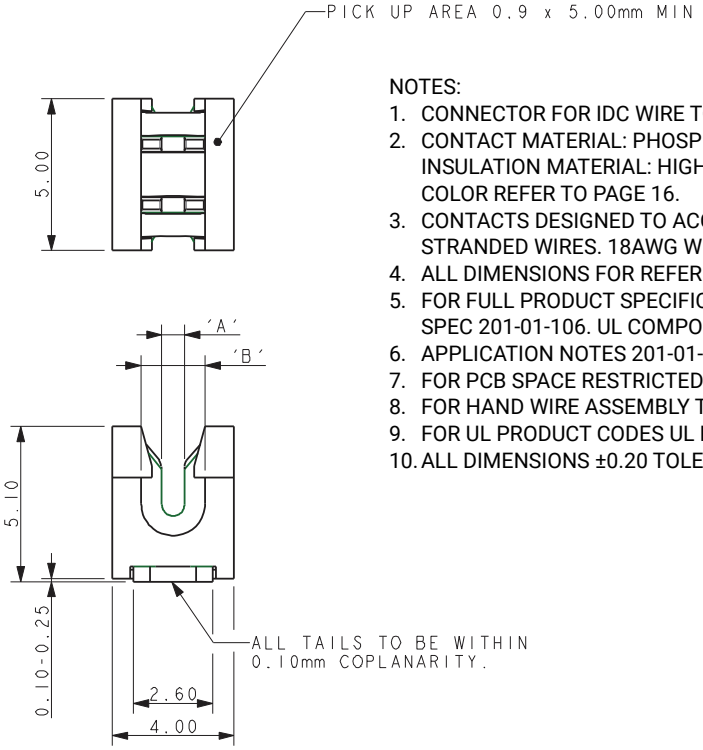

NOTES:
1. CONNECTOR FOR IDC WIRE TO BOARD CONNECTION.
2. CONTACT MATERIAL: PHOSPHOR BRONZE.
   INSULATION MATERIAL: HIGH TEMPERATURE NYLON 46.
   COLOR REFER TO PAGE 16.
3. CONTACTS DESIGNED TO ACCEPT BETWEEN 20AWG AND 24AWG SOLID AND STRANDED WIRES. 18AWG WILL ONLY ACCEPT STRANDED WIRES, SEE TABLE.
4. ALL DIMENSIONS FOR REFERENCE UNLESS OTHERWISE STATED.
5. FOR FULL PRODUCT SPECIFICATION ON STANDARD CONNECTORS REFER TO ELCO SPEC 201-01-106. UL COMPONENTS REFER TO ELECO SPEC 201-01-106U.
6. APPLICATION NOTES 201-01-124.
7. FOR PCB SPACE RESTRICTED BY WIRE ASSEMBLY TOOLING REFER TO PAGE 23.
8. FOR HAND WIRE ASSEMBLY TOOLING REFER TO PAGE 23.
9. FOR UL PRODUCT CODES UL REFERENCE E90723 (US AND CANADA).
10. ALL DIMENSIONS ±0.20 TOLERANCE SPECIFIED.

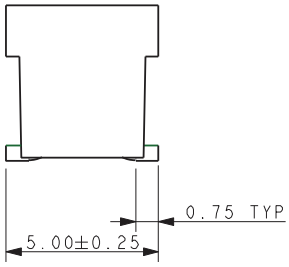

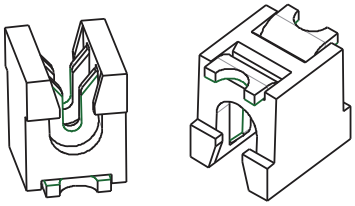

Code	Accepted Wire Gauge	A	Wire Insulation	B
001	18AWG Stranded	0.72	Ø1.6-2.1	2.1
011	20AWG Solid and Stranded	0.60	Ø1.6-2.1	2.1
022	22AWG Solid and Stranded	0.47	Ø1.1-1.6	1.6
032	24AWG Solid and Stranded	0.37	Ø1.1-1.6	1.6

SMT PCB LAYOUT

PURE TIN PADS

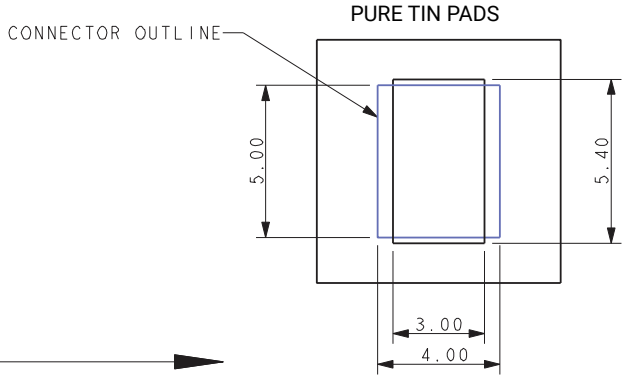

PACKING DETAILS

REEL QTY	1000
LEADER	480MM
TRAILER	120MM

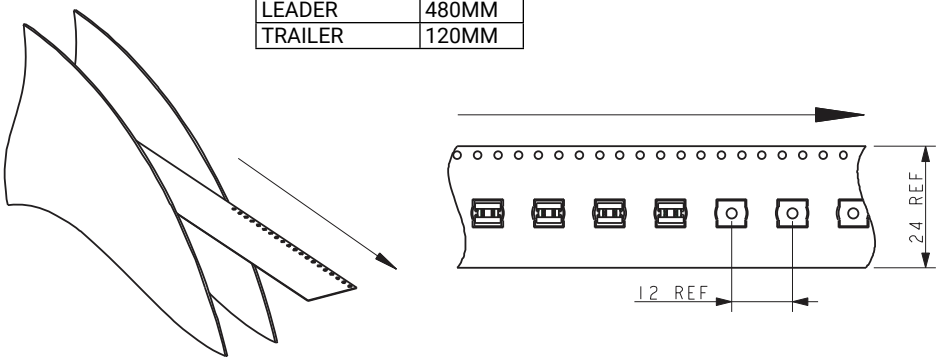

The Important Information/Disclaimer is incorporated in the catalog where these specifications came from or available online at www.avx.com/disclaimer/ by reference and should be reviewed in full before placing any order.

18-24 AWG 2 WAY IDC CONNECTOR

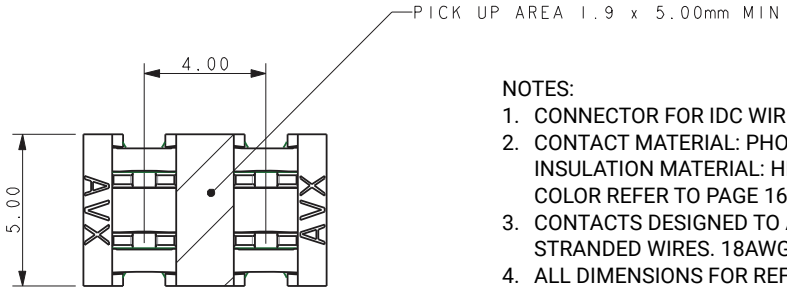

NOTES:
1. CONNECTOR FOR IDC WIRE TO BOARD CONNECTION.
2. CONTACT MATERIAL: PHOSPHOR BRONZE.
   INSULATION MATERIAL: HIGH TEMPERATURE NYLON 46.
   COLOR REFER TO PAGE 16.
3. CONTACTS DESIGNED TO ACCEPT BETWEEN 20AWG AND 24AWG SOLID AND STRANDED WIRES. 18AWG WILL ONLY ACCEPT STRANDED WIRES, SEE TABLE.
4. ALL DIMENSIONS FOR REFERENCE UNLESS OTHERWISE STATED.
5. FOR FULL PRODUCT SPECIFICATION ON STANDARD CONNECTORS REFER TO ELCO SPEC 201-01-106. UL COMPONENTS REFER TO ELECO SPEC 201-01-106U.
6. APPLICATION NOTES 201-01-124.
7. FOR PCB SPACE RESTRICTED BY WIRE ASSEMBLY TOOLING REFER TO PAGE 23.
8. FOR HAND WIRE ASSEMBLY TOOLING REFER TO PAGE 23.
9. FOR UL PRODUCT CODES UL REFERENCE E90723 (US AND CANADA).
10. ALL DIMENSIONS ±0.20 TOLERANCE SPECIFIED.

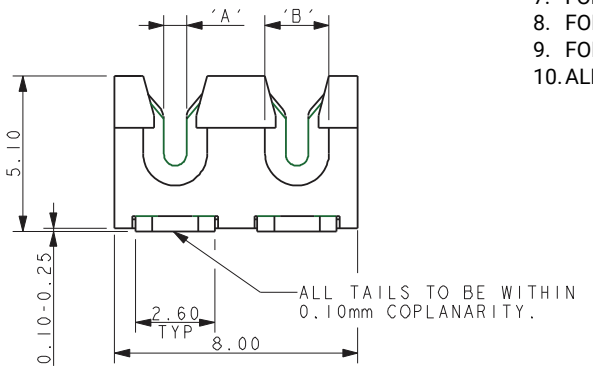

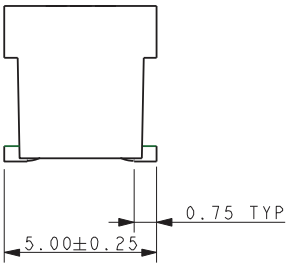

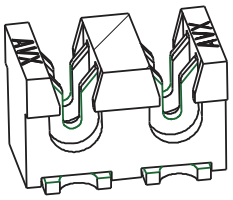

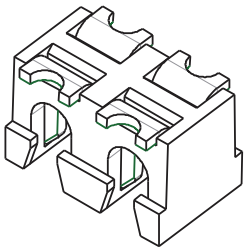

Code	Accepted Wire Gauge	A	Wire Insulation	B
001	18AWG Stranded	0.72	Ø1.6-2.1	2.1
011	20AWG Solid and Stranded	0.60	Ø1.6-2.1	2.1
022	22AWG Solid and Stranded	0.47	Ø1.1-1.6	1.6
032	24AWG Solid and Stranded	0.37	Ø1.1-1.6	1.6

SMT PCB LAYOUT

PURE TIN PADS

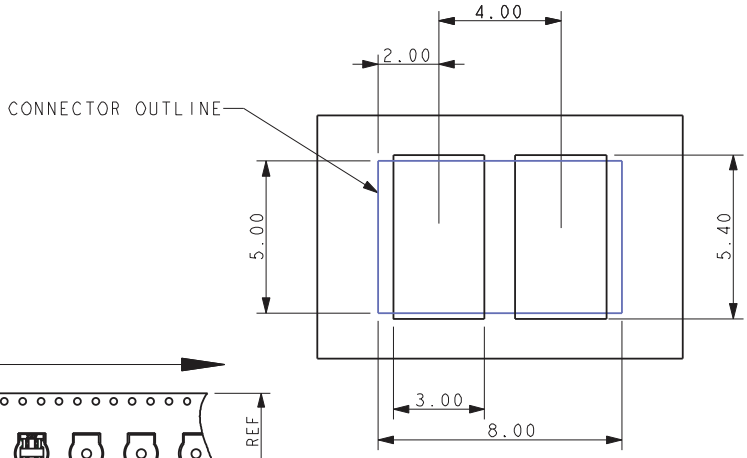

PACKING DETAILS

REEL QTY	1000
LEADER	480MM
TRAILER	120MM

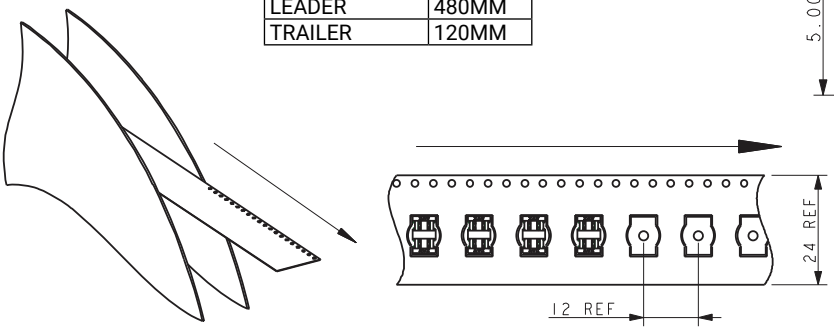

The Important Information/Disclaimer is incorporated in the catalog where these specifications came from or available online at www.avx.com/disclaimer/ by reference and should be reviewed in full before placing any order.

18-24 AWG 3 WAY IDC CONNECTOR

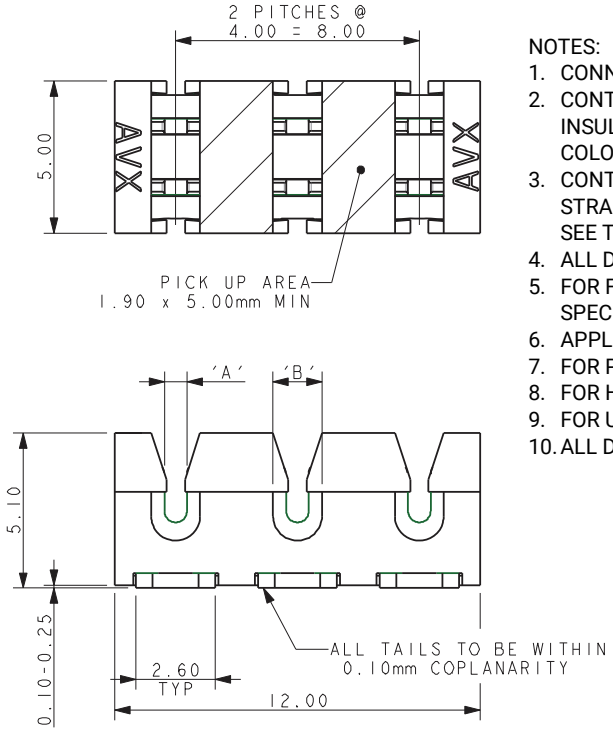

NOTES:
1. CONNECTOR FOR IDC WIRE TO BOARD CONNECTION.
2. CONTACT MATERIAL: PHOSPHOR BRONZE.
   INSULATION MATERIAL: HIGH TEMPERATURE NYLON 46.
   COLOR REFER TO PAGE 16.
3. CONTACTS DESIGNED TO ACCEPT BETWEEN 20AWG AND 24AWG SOLID AND STRANDED WIRES. 18AWG WILL ONLY ACCEPT STRANDED WIRES, SEE TABLE.
4. ALL DIMENSIONS FOR REFERENCE UNLESS OTHERWISE STATED.
5. FOR FULL PRODUCT SPECIFICATION ON STANDARD CONNECTORS REFER TO ELCO SPEC 201-01-106. UL COMPONENTS REFER TO ELECO SPEC 201-01-106U.
6. APPLICATION NOTES 201-01-124.
7. FOR PCB SPACE RESTRICTED BY WIRE ASSEMBLY TOOLING REFER TO PAGE 23.
8. FOR HAND WIRE ASSEMBLY TOOLING REFER TO PAGE 23.
9. FOR UL PRODUCT CODES UL REFERENCE E90723 (US AND CANADA).
10. ALL DIMENSIONS ±0.20 TOLERANCE SPECIFIED.

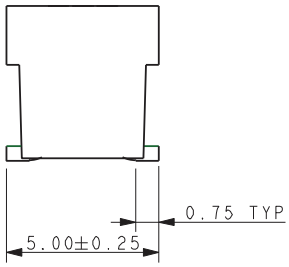

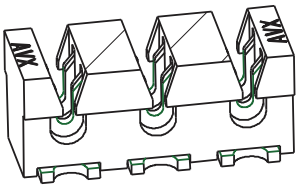

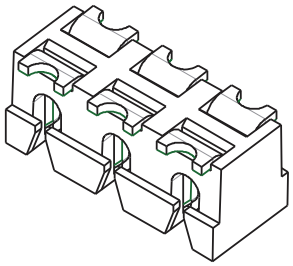

Code	Accepted Wire Gauge	A	Wire Insulation	B
001	18AWG Stranded	0.72	Ø1.6-2.1	2.1
011	20AWG Solid and Stranded	0.60	Ø1.6-2.1	2.1
022	22AWG Solid and Stranded	0.47	Ø1.1-1.6	1.6
032	24AWG Solid and Stranded	0.37	Ø1.1-1.6	1.6

SMT PCB LAYOUT

PURE TIN PADS

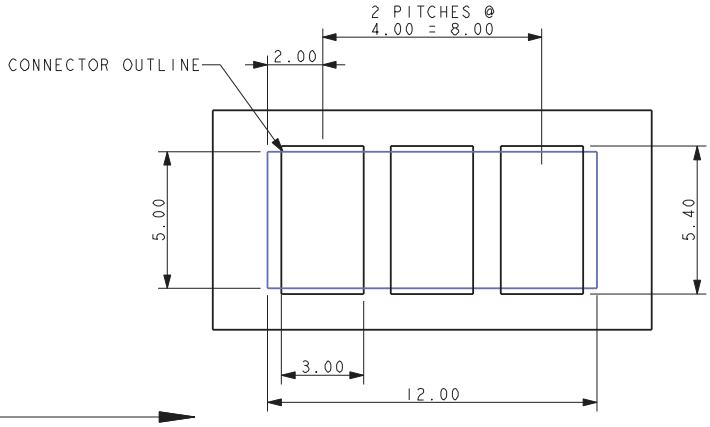

PACKING DETAILS

REEL QTY	1000
LEADER	480MM
TRAILER	120MM

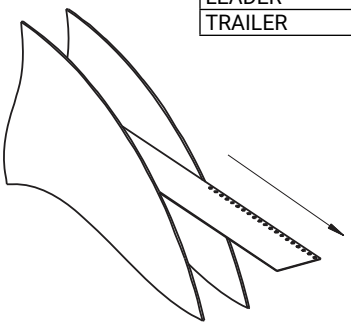

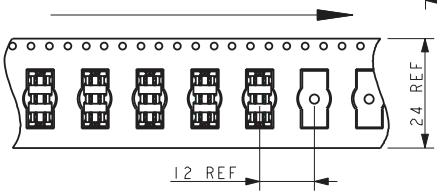

The Important Information/Disclaimer is incorporated in the catalog where these specifications came from or available online at www.avx.com/disclaimer/ by reference and should be reviewed in full before placing any order.

60-9176-00X-0XX-X00
ACCESSORY CAP – THROUGH WIRE

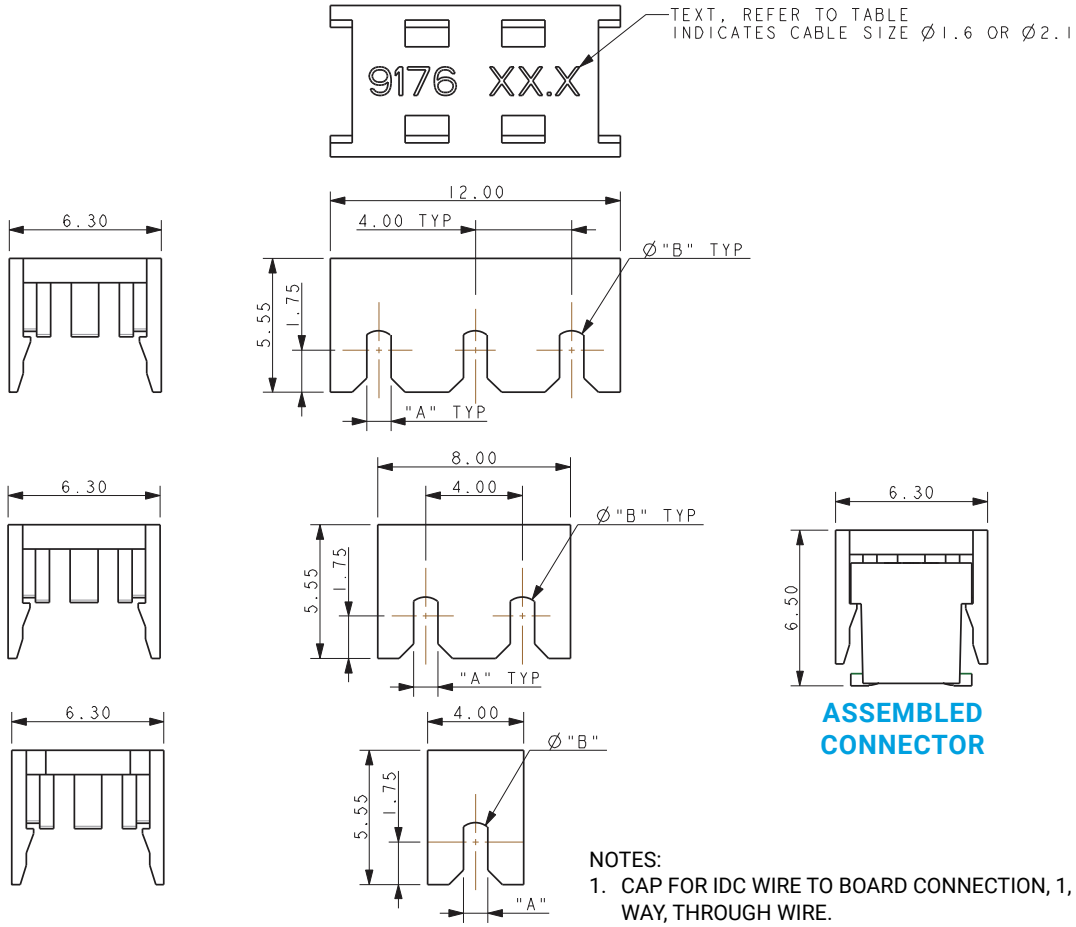

ASSEMBLED CONNECTOR

60-9176-001-016-X00

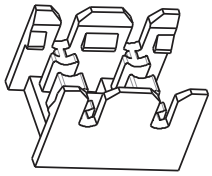

60-9176-002-016-X00

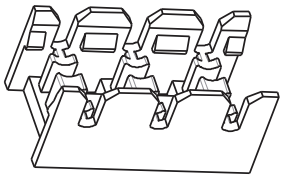

60-9176-003-016-X00

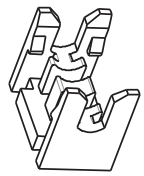

60-9176-001-021-X00

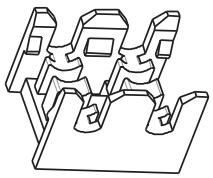

60-9176-002-021-X00

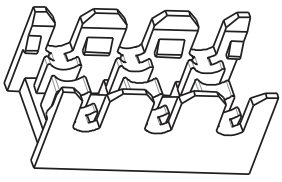

60-9176-003-021-X00

NOTES:
1. CAP FOR IDC WIRE TO BOARD CONNECTION, 1, 2 AND 3 WAY, THROUGH WIRE.
2. FOR USE WITH STANDARD 9176 IDC CONNECTORS, SEE PAGE 17 FOR THE CORRECT PART CODE TO MATCH WIRE.
3. CAP MATERIAL: GLASS FILLED NYLON 46, FOR COLORS SEE TABLE BELOW.
4. DIMENSIONS A, B AND TEXT, SEE TABLE BELOW.
5. CAPS DESIGNED TO ACCOMMODATE WIRE INSULATION DIAMETERS 1.1MM TO 1.6MM AND 1.6MM TO 2.1MM.
6. ALL DIMENSIONS SHOWN ARE REFERENCE DIMENSIONS.
7. PACKED IN BAGS, 1000 PIECES PER BAG.
8. ONE WAY CAP ASSEMBLY AID, REFER TO PAGE 25.
9. ALL DIMENSIONS ±0.20 TOLERANCE SPECIFIED.

Code	Slot A	Diameter B	Text
016	1.00	1.60	Ø1.6
021	1.50	2.10	Ø2.1

Color	X00
Black	000
White	100

The Important Information/Disclaimer is incorporated in the catalog where these specifications came from or available online at www.avx.com/disclaimer/ by reference and should be reviewed in full before placing any order.

60-9176-00X-0XX-X99
ACCESSORY CAP – WIRE STOP

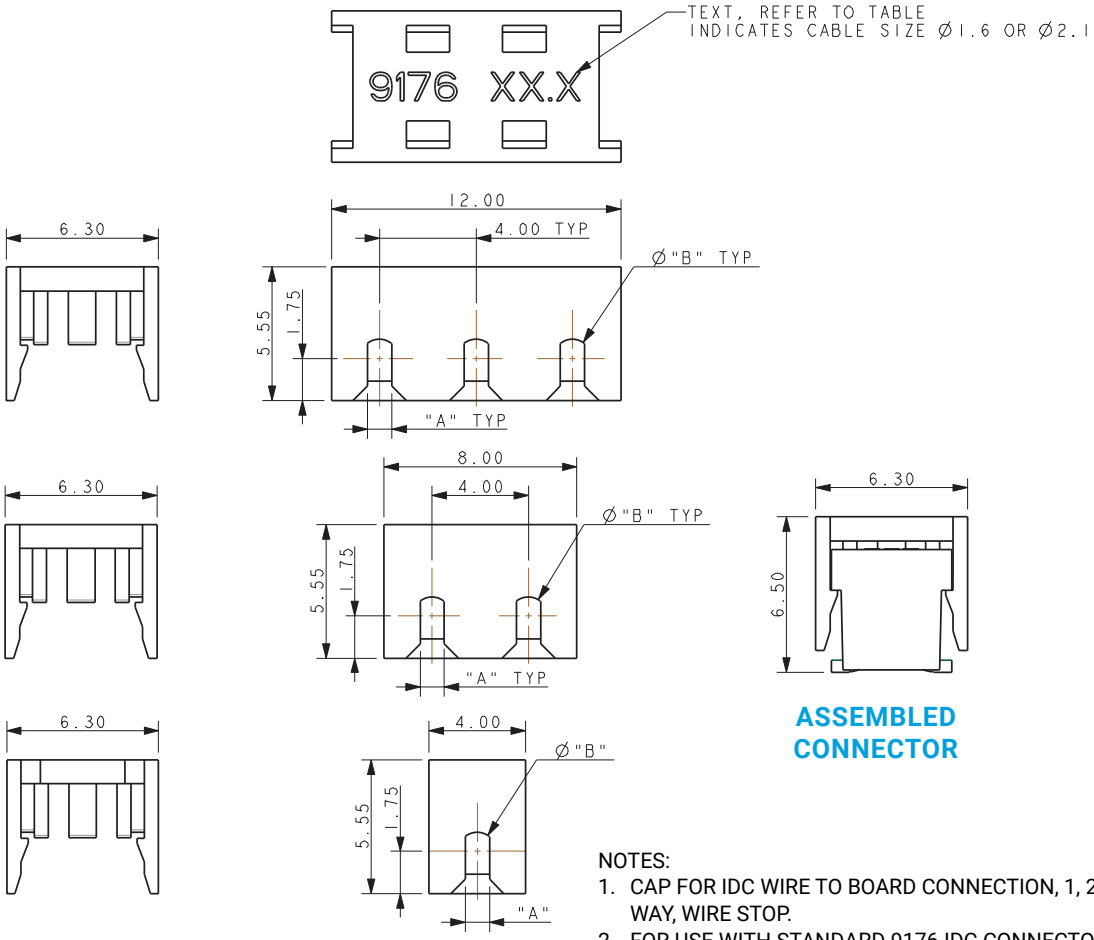

ASSEMBLED CONNECTOR

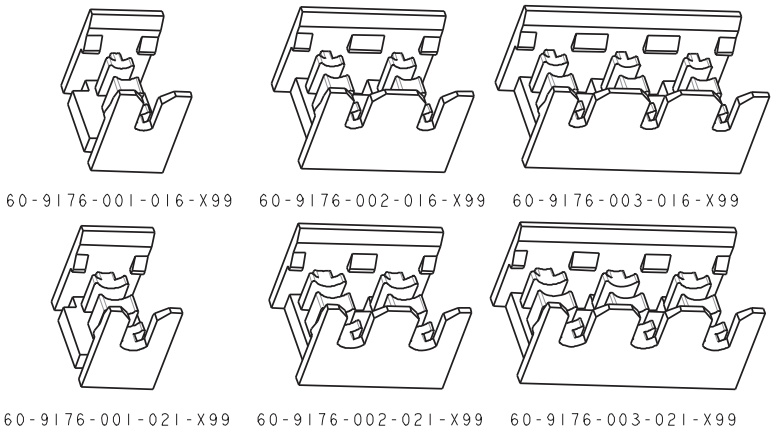

NOTES:
1. CAP FOR IDC WIRE TO BOARD CONNECTION, 1, 2 AND 3 WAY, WIRE STOP.
2. FOR USE WITH STANDARD 9176 IDC CONNECTORS, SEE PAGE 17 FOR THE CORRECT PART CODE TO MATCH WIRE.
3. CAP MATERIAL: GLASS FILLED NYLON 46, FOR COLORS SEE TABLE BELOW.
4. DIMENSIONS A, B AND TEXT, SEE TABLE BELOW.
5. CAPS DESIGNED TO ACCOMMODATE WIRE INSULATION DIAMETERS 1.1MM TO 1.6MM AND 1.6MM TO 2.1MM.
6. ALL DIMENSIONS SHOWN ARE REFERENCE DIMENSIONS.
7. PACKED IN BAGS, 1000 PIECES PER BAG.
8. ONE WAY CAP ASSEMBLY AID, REFER TO PAGE 25.
9. ALL DIMENSIONS ±0.20 TOLERANCE SPECIFIED.

Code	Slot A	Diameter B	Text
016	1.00	1.60	Ø1.6
021	1.50	2.10	Ø2.1

Color	X00
Black	000
White	100

The Important Information/Disclaimer is incorporated in the catalog where these specifications came from or available online at www.avx.com/disclaimer/ by reference and should be reviewed in full before placing any order.

HAND INSERTION TOOLING FOR SINGLE 18/24 GAUGE WIRE

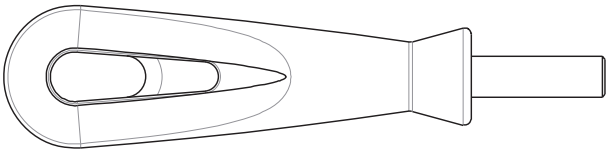

UNIVERSAL HANDLE

Details	Tool Part Number
6.35 A/F HEX BIT HOLDER	06 7000 7730 01 000

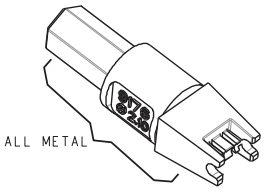

HIGH PRODUCTION

Metal

Max Insulation Dia	Tool Part Number
Ø2.10	06 9176 7017 01 000
Ø1.60	06 9176 7017 02 000

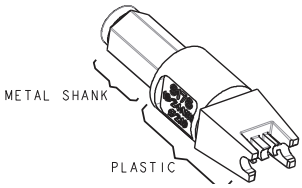

MEDIUM PRODUCTION

Metal/Plastic

Max Insulation Dia	Tool Part Number
Ø2.10	06 9176 7016 01 000
Ø1.60	06 9176 7016 02 000

CLEARANCE AREA ON PCB FOR HAND TOOLING

1 WAY

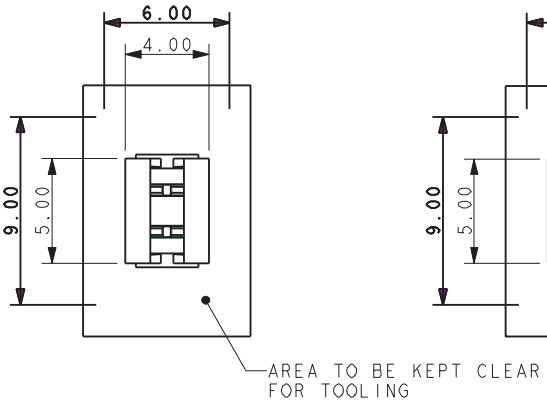

2 WAY

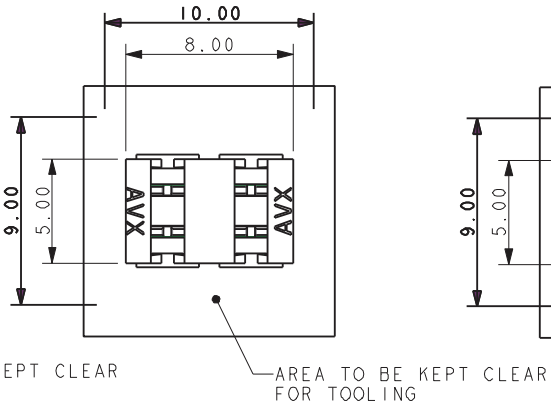

3 WAY

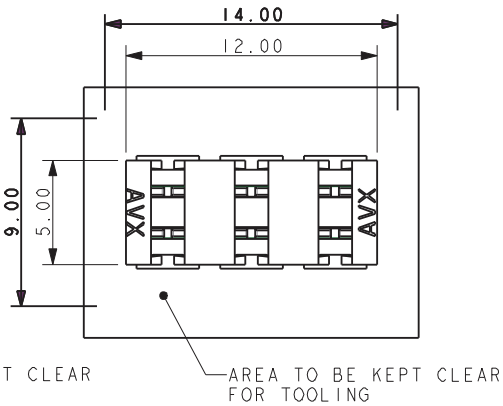

INSERTION TOOLING
REQUIRES HAND PRESS WITH FLAT ROCK PLATES

2 WAY

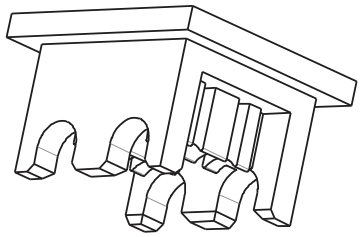

3 WAY

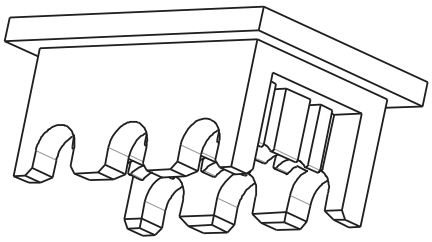

HIGH PRODUCTION
Metal

No. of Ways	Max Insulation Dia	Tool Part Number
2	Ø2.10	06 9176 7017 01 002
	Ø1.60	06 9176 7017 02 002
3	Ø2.10	06 9176 7017 01 003
	Ø1.60	06 9176 7017 02 003

PCB RESTRICTED AREAS FOR PRESS ASSEMBLY TOOLING

2 WAY

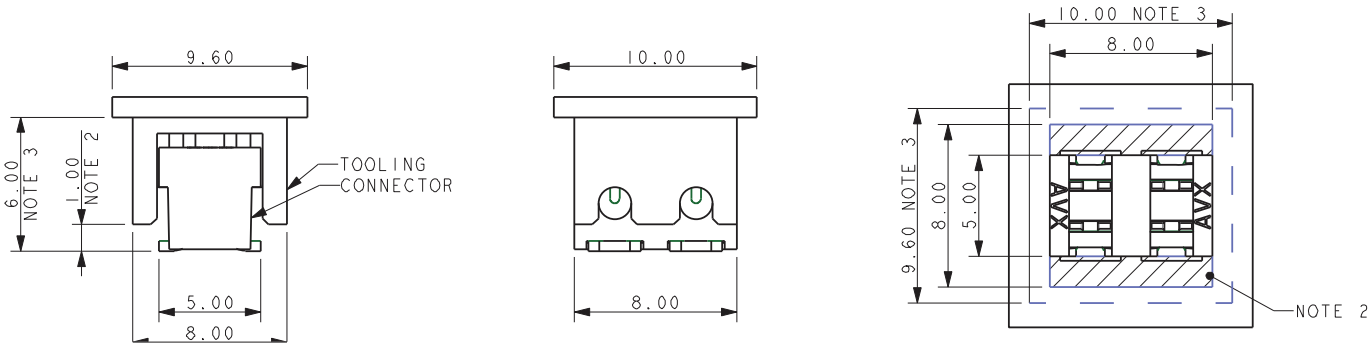

3 WAY

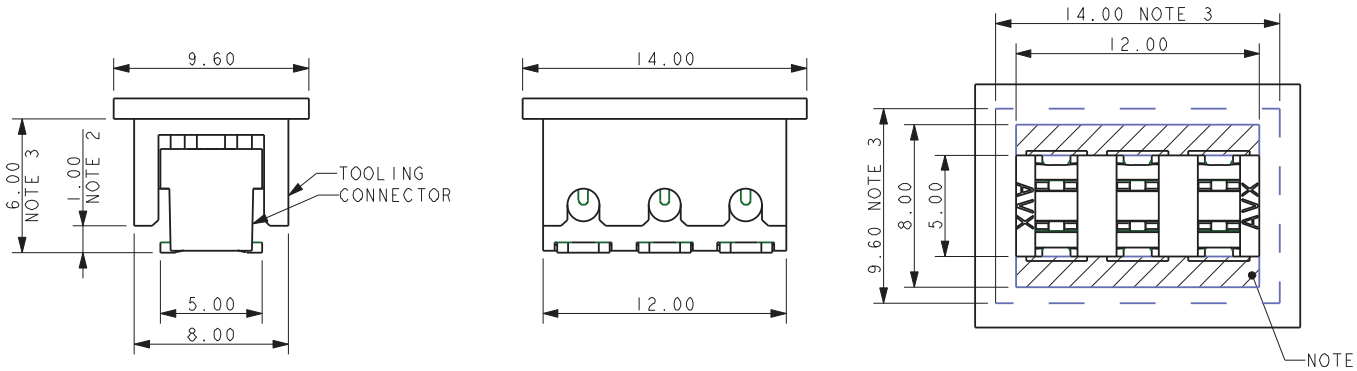

NOTES:
1. DIMENSIONS SHOWN ARE REFERENCE DIMENSIONS.
2. MAXIMUM COMPONENT HEIGHT 1.00MM IN THIS AREA.
3. MAXIMUM COMPONENT HEIGHT 6.00MM IN THIS AREA.
4. THE SAME RESTRICTIONS APPLY TO ALL WIRE INSULATION DIAMETERS.
5. 2 AND 3 WAY TOOLS ONLY, FOR USE UNDER HAND PRESS WITH FLAT PLATES.
6. FOR HAND TOOLING REFER TO PAGE 23.
7. ALL DIMENSIONS ±0.20 UNLESS TOLERANCE SPECIFIED.

The Important Information/Disclaimer is incorporated in the catalog where these specifications came from or available online at www.avx.com/disclaimer/ by reference and should be reviewed in full before placing any order.

HAND INSERTION TOOLING FOR ONE WAY CAP INSERTION

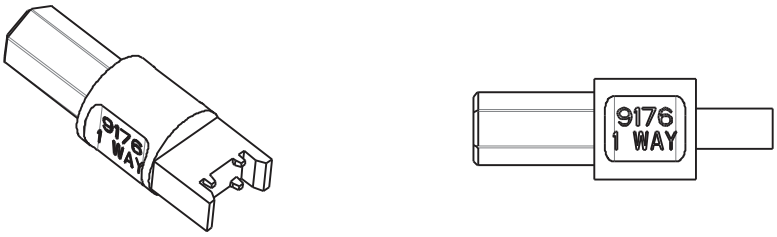

06-9176-7028-01-000

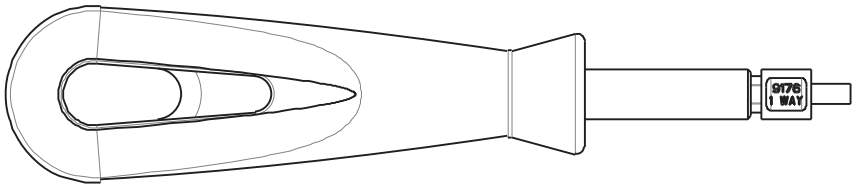

TO BE USED WITH 06-7000-7730-01-000
UNIVERSAL HANDLE

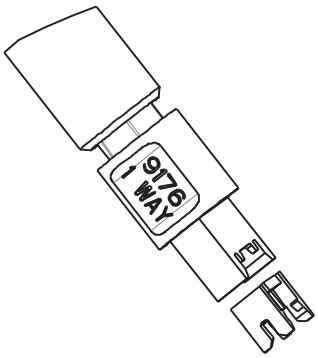

FOR ASSEMBLY INSTRUCTION REFER TO 201-01-124 APPLICATION NOTES

CLEARANCE AREA ON PCB FOR HAND TOOLING

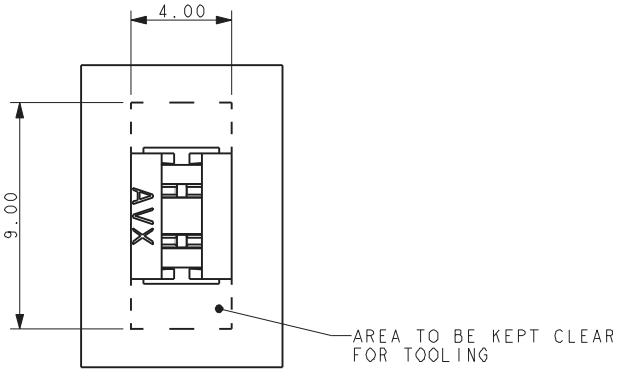

ASSEMBLED CONNECTOR

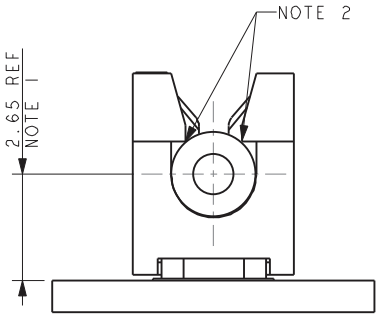

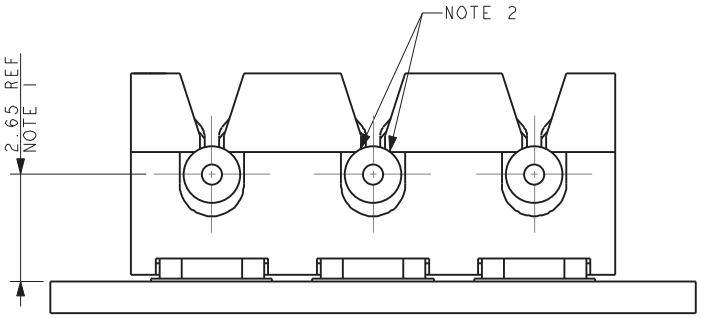

ASSEMBLED CONNECTOR

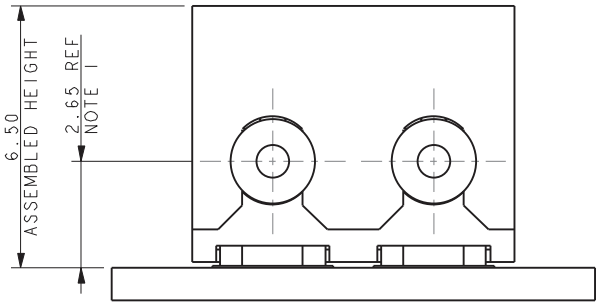

CONNECTOR WITH CAP

NOTES:
1. ASSEMBLED HEIGHTS INCLUDE 0.10MM ALLOWANCE FOR PAD AND SOLDER THICKNESS. NO ALLOWANCE HAS BEEN MADE FOR ANY SOLDER RESIST OR OTHER FEATURES.
2. WHEN THE WIRE IS ASSEMBLED THE INSULTATION SHOULD BE TRAPPED BY THESE EDGES.

The Important Information/Disclaimer is incorporated in the catalog where these specifications came from or available online at www.avx.com/disclaimer/ by reference and should be reviewed in full before placing any order.

CAPPED 18-24 AWG: 9176-700

General Information

The market and applications for simple and reliable discrete Wire-to-Board connectors continue to evolve. KYOCERA AVX first introduced the 9176 series of surface mountable Insulation Displacement Connectors (IDC) in 2007. Developed for harsh industrial and automotive applications, these connectors have been used in hundreds of applications from today's "Smart Meter" all the way down to a simple sensor termination to a PCB. Size and performance has been one of the key factors for selecting this connector in terminating 18-24AWG wires to a PCB.

The next generation of IDC connector moves beyond all of the technical and performance attributes to address the "User Friendliness" of the product. By changing the insulator from acting as a connector body and make it more like a contact carrier, the insulator becomes the wire location and insertion aid without any special tools. The wire is just inserted into the cap (no stripping required) and then pressed down to provide a secure "Gas Tight" termination. This configuration simplifies and cost reduces the entire wire termination process for connecting discrete wires to a PCB.

APPLICATIONS

- Connecting discrete wire components to a PCB
- Bringing power and signals onto a PCB
- Daisy chaining PCB's together to create a continuous string
- Reference Product Specification 201-01-140

FEATURES AND BENEFITS

- IDC contact provides a gas-tight connection to the PCB for long term reliability
- Plastic cap retains the contacts in position prior to automatic placement, then acts as the assembly tool to terminate the wires; no special tooling.
- Tested to automotive levels on shock, vibration and temperature cycling for reliability
- Identical contact and footprint pattern to the existing 9176 for full backward compatibility and functionality
- The IDC contact reduces the total applied cost versus solder or crimp processes
- Connectors are available in two configurations for maximum flexibility; End and Through Wire

ELECTRICAL

- Current Rating: 10 Amps / Contact
- Voltage Rating: 300 VAC

ENVIRONMENTAL

- Operating Temperature: -40°C to +125°C

MECHANICAL

- Insulator Material: Nylon UL94VO
- Contact Material: Phosphor Bronze
- Plating: Tin over Nickel

HOW TO ORDER

00 — **Prefix**

9176 — **Series**

00X — **Number of Ways**
001 = 1
002 = 2
003 = 3

7XX — **Wire Gauge Size**
Capped - IDC Connector

Code	Accepted Wire Gauge	Wire Insulation
701	18 AWG Stranded	Ø 1.6 - 2.1
711	20 AWG Solid and Stranded	Ø 1.6 - 2.1
722	22 AWG Solid and Stranded	Ø 1.1 - 1.6
732	24 AWG Solid and Stranded	Ø 1.1 - 1.6

X — **Insulator Color**
All Sizes
9 = UL White (Standard)
8 = UL Black (Special Order)

One Way Only (Special Order)
2 = UL Brown
3 = UL Blue
4 = UL Yellow
5 = UL Red
6 = UL Green
7 = UL Orange

X — **Cap Options**

Code	Cap Option	Description	Detail
0	Through Wire	Allows wire to be terminated at any point	Pages 26 - 28
9	Wire Stop	Terminates end of wire End Protected by stop face	Pages 29 - 31

6 — **Plating Option**
6 = Pure Tin all over

RoHS COMPLIANT

Certification: UL File #E90723

The Important Information/Disclaimer is incorporated in the catalog where these specifications came from or available online at www.avx.com/disclaimer/ by reference and should be reviewed in full before placing any order.

CAPPED 18-24 AWG: 9176-700

1 Position - Through Wire

18 - 24 AWG 1 WAY IDC CONNECTOR THROUGH WIRE CAPPED IDC

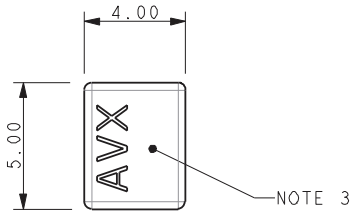

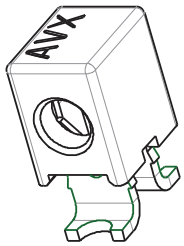

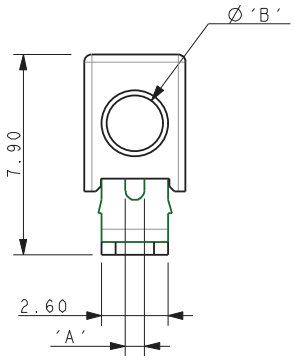

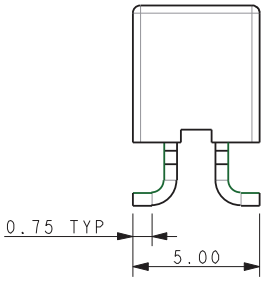

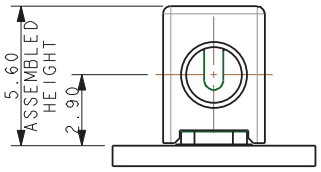

MOUNTED ON PCB

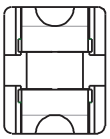

NOTES:

1. 1 WAY CONNECTOR FOR IDC WIRE TO BOARD CONNECTION. PRE-ASSEMBLED THROUGH WIRE CAP, CODE REFER TO PAGE 27.
2. CONTACT/CAP TO MATCH 20AWG-24AWG SOLID AND STRANDED WIRES, 18AWG WILL ONLY ACCEPT STRANDED WIRES, SEE TABLE.
3. FLAT FACE ON TOP OF CAP TO AID PICK AND PLACE ASSEMBLY.
4. FOR FULL PRODUCT SPECIFICATION ON STANDARD CONNECTORS REFER TO ELCO SPEC 201-01-138, UL COMPONENTS REFER TO ELCO SPEC 201-01-138UL.
5. ASSEMBLY PROCEDURE, REFER TO APPLICATION NOTES 201-01-140.
6. GENERAL TOLERANCE ±0.20 UNLESS STATED.
7. PACKED IN TAPE AND REEL, QUANTITY PER REEL 600.
8. CONNECTOR OUTLINE.
9. CONTACT MATERIAL: TIN PLATED COPPER ALLOY.
10. INSULATION MATERIAL: HIGH TEMPERATURE NYLON, GLASS FILLED. UL94 V-0, COLOR REFER TO PAGE 27.
11. GENERAL TOLERANCE ±0.20 UNLESS STATED.
12. FOR UL PRODUCT CODES UL REFERENCE E90723 (US AND CANADA).

Code	Accepted Wire Gauge	A	Wire Insulation	B
701	18 AWG Stranded	0.74	Ø1.6-2.1	2.1
711	20 AWG Solid and Stranded	0.60	Ø1.6-2.1	2.1
722	22 AWG Solid and Stranded	0.47	Ø 1.1-1.6	1.6
732	24 AWG Solid and Stranded	0.37	Ø 1.1-1.6	1.6

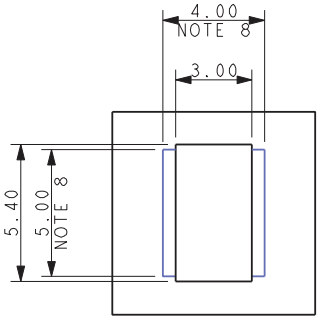

SUGGEST PCB LAYOUT

PACKING DETAILS

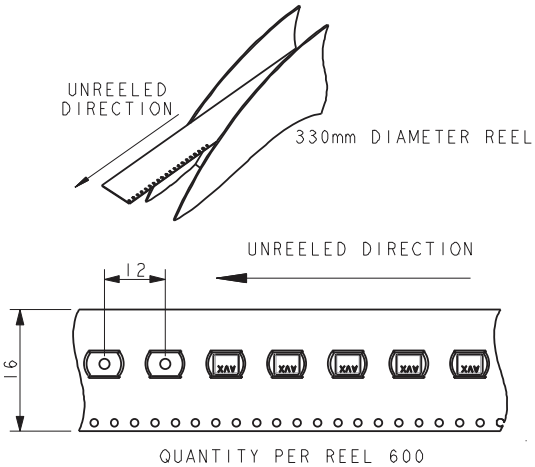

The Important Information/Disclaimer is incorporated in the catalog where these specifications came from or available online at www.avx.com/disclaimer/ by reference and should be reviewed in full before placing any order.

18 - 24 AWG 2 WAY IDC CONNECTOR THROUGH WIRE CAPPED IDC

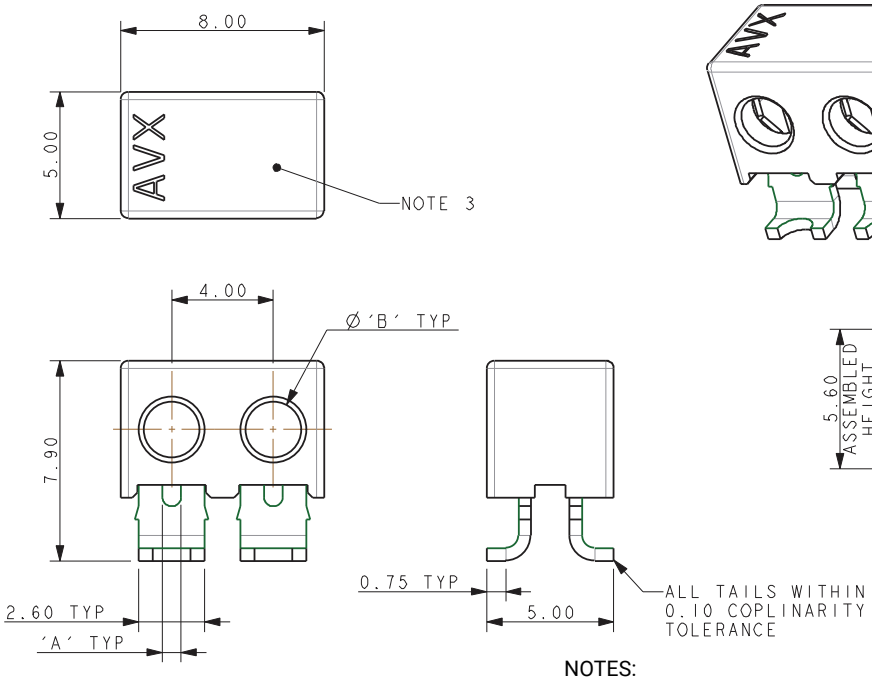

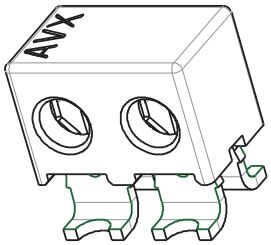

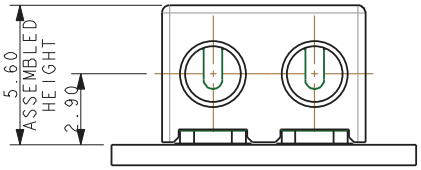

MOUNTED ON PCB

NOTES:

1. 2 WAY CONNECTOR FOR IDC WIRE TO BOARD CONNECTION. PRE-ASSEMBLED THROUGH WIRE CAP, CODE REFER TO PAGE 27.
2. CONTACT/CAP TO MATCH 20AWG-24AWG SOLID AND STRANDED WIRES, 18AWG WILL ONLY ACCEPT STRANDED WIRES, SEE TABLE.
3. FLAT FACE ON TOP OF CAP TO AID PICK AND PLACE ASSEMBLY.
4. FOR FULL PRODUCT SPECIFICATION ON STANDARD CONNECTORS REFER TO ELCO SPEC 201-01-138, UL COMPONENTS REFER TO ELCO SPEC 201-01-138UL.
5. ASSEMBLY PROCEDURE, REFER TO APPLICATION NOTES 201-01-140.
6. GENERAL TOLERANCE ±0.20 UNLESS STATED.
7. PACKED IN TAPE AND REEL, QUANTITY PER REEL 600.
8. CONNECTOR OUTLINE.
9. CONTACT MATERIAL: TIN PLATED COPPER ALLOY.
10. INSULATION MATERIAL: HIGH TEMPERATURE NYLON, GLASS FILLED. UL94 V-0, COLOR REFER TO PAGE 27.
11. GENERAL TOLERANCE ±0.20 UNLESS STATED.
12. FOR UL PRODUCT CODES UL REFERENCE E90723 (US AND CANADA).

Code	Accepted Wire Gauge	A	Wire Insulation	B
701	18 AWG Stranded	0.74	Ø1.6-2.1	2.1
711	20 AWG Solid and Stranded	0.60	Ø1.6-2.1	2.1
722	22 AWG Solid and Stranded	0.47	Ø 1.1-1.6	1.6
732	24 AWG Solid and Stranded	0.37	Ø 1.1-1.6	1.6

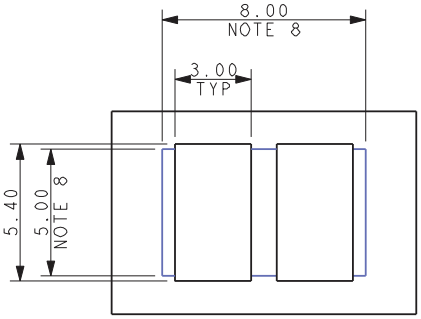

SUGGEST PCB LAYOUT

PACKING DETAILS

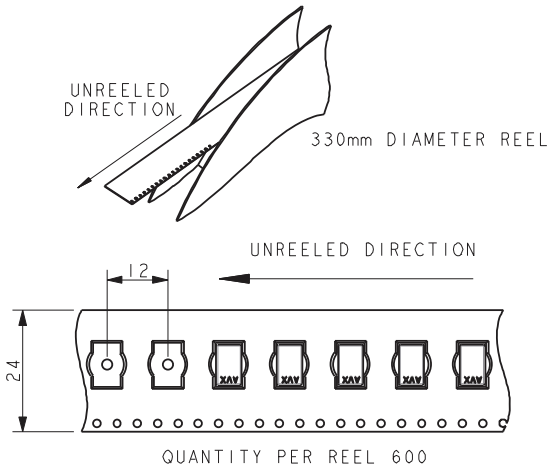

CAPPED 18-24 AWG: 9176-700

3 Position - Through Wire

18 - 24 AWG 3 WAY IDC CONNECTOR THROUGH WIRE CAPPED IDC

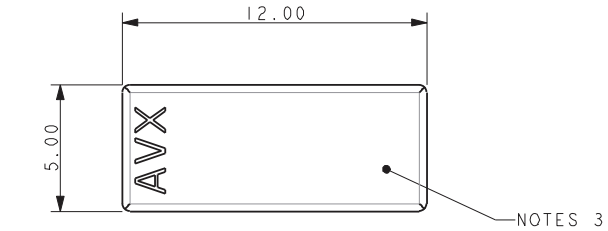

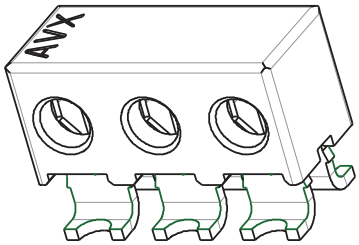

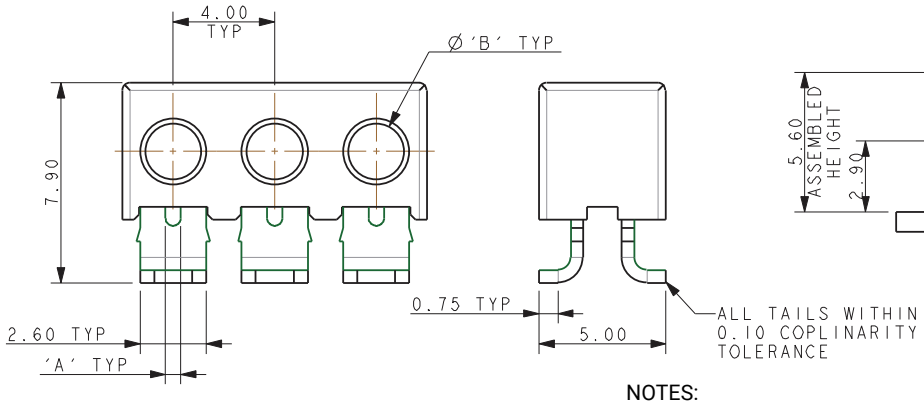

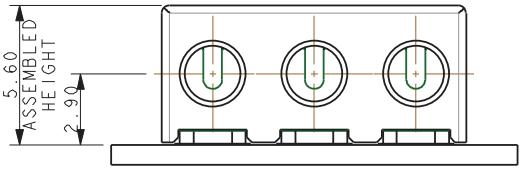

MOUNTED ON PCB

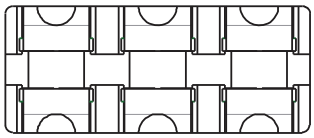

NOTES:

1. 3 WAY CONNECTOR FOR IDC WIRE TO BOARD CONNECTION. PRE-ASSEMBLED THROUGH WIRE CAP, CODE REFER TO PAGE 27.
2. CONTACT/CAP TO MATCH 20AWG-24AWG SOLID AND STRANDED WIRES, 18AWG WILL ONLY ACCEPT STRANDED WIRES, SEE TABLE.
3. FLAT FACE ON TOP OF CAP TO AID PICK AND PLACE ASSEMBLY.
4. FOR FULL PRODUCT SPECIFICATION ON STANDARD CONNECTORS REFER TO ELCO SPEC 201-01-138, UL COMPONENTS REFER TO ELCO SPEC 201-01-138UL.
5. ASSEMBLY PROCEDURE, REFER TO APPLICATION NOTES 201-01-140.
6. GENERAL TOLERANCE ±0.20 UNLESS STATED.
7. PACKED IN TAPE AND REEL, QUANTITY PER REEL 600.
8. CONNECTOR OUTLINE.
9. CONTACT MATERIAL: TIN PLATED COPPER ALLOY.
10. INSULATION MATERIAL: HIGH TEMPERATURE NYLON, GLASS FILLED. UL94 V-0, COLOR REFER TO PAGE 27.
11. GENERAL TOLERANCE ±0.20 UNLESS STATED.
12. FOR UL PRODUCT CODES UL REFERENCE E90723 (US AND CANADA).

Code	Accepted Wire Gauge	A	Wire Insulation	B
701	18 AWG Stranded	0.74	Ø1.6-2.1	2.1
711	20 AWG Solid and Stranded	0.60	Ø1.6-2.1	2.1
722	22 AWG Solid and Stranded	0.47	Ø 1.1-1.6	1.6
732	24 AWG Solid and Stranded	0.37	Ø 1.1-1.6	1.6

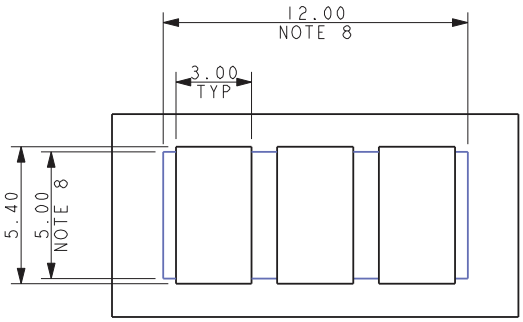

SUGGEST PCB LAYOUT

PACKING DETAILS

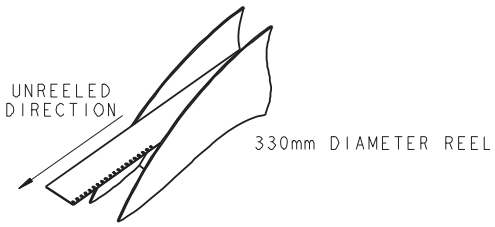

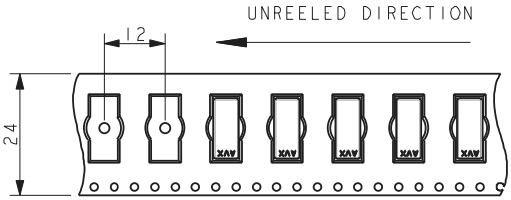

QUANTITY PER REEL 600

The Important Information/Disclaimer is incorporated in the catalog where these specifications came from or available online at www.avx.com/disclaimer/ by reference and should be reviewed in full before placing any order.

CAPPED 18-24 AWG: 9176-700

1 Position - Wire Stop

18 - 24 AWG 1 WAY IDC CONNECTOR WIRE STOP CAPPED IDC

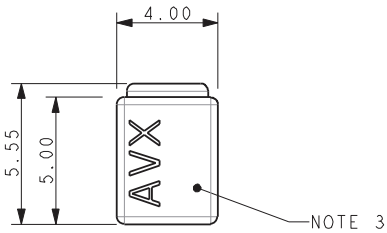

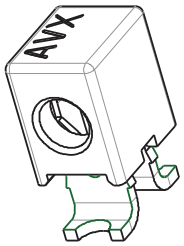

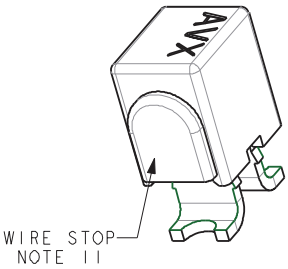

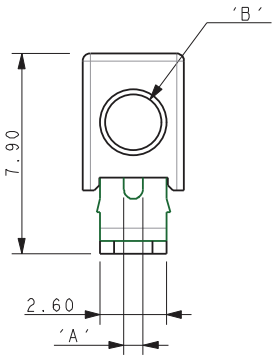

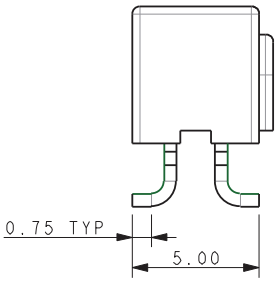

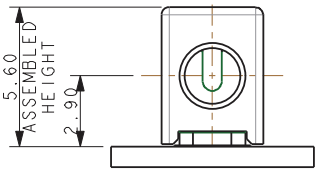

MOUNTED ON PCB

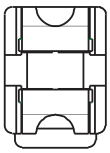

NOTES:

1. 1 WAY CONNECTOR FOR IDC WIRE TO BOARD CONNECTION. PRE-ASSEMBLED WIRE STOP CAP, CODE REFER TO PAGE 27.
2. CONTACT/CAP TO MATCH 20AWG-24AWG SOLID AND STRANDED WIRES, 18AWG WILL ONLY ACCEPT STRANDED WIRES, SEE TABLE.
3. FLAT FACE ON TOP OF CAP TO AID PICK AND PLACE ASSEMBLY.
4. FOR FULL PRODUCT SPECIFICATION ON STANDARD CONNECTORS REFER TO ELCO SPEC 201-01-138, UL COMPONENTS REFER TO ELCO SPEC 201-01-138UL.
5. ASSEMBLY PROCEDURE, REFER TO APPLICATION NOTES 201-01-140.
6. GENERAL TOLERANCE ±0.20 UNLESS STATED.
7. PACKED IN TAPE AND REEL, QUANTITY PER REEL 600.
8. CONNECTOR OUTLINE.
9. CONTACT MATERIAL: TIN PLATED COPPER ALLOY.
10. INSULATION MATERIAL: HIGH TEMPERATURE NYLON, GLASS FILLED. UL94 V-0, COLOR REFER TO PAGE 27.
11. GENERAL TOLERANCE ±0.20 UNLESS STATED.
12. FOR UL PRODUCT CODES UL REFERENCE E90723 (US AND CANADA).

Code	Accepted Wire Gauge	A	Wire Insulation	B
701	18 AWG Stranded	0.74	Ø1.6-2.1	2.1
711	20 AWG Solid and Stranded	0.60	Ø1.6-2.1	2.1
722	22 AWG Solid and Stranded	0.47	Ø 1.1-1.6	1.6
732	24 AWG Solid and Stranded	0.37	Ø 1.1-1.6	1.6

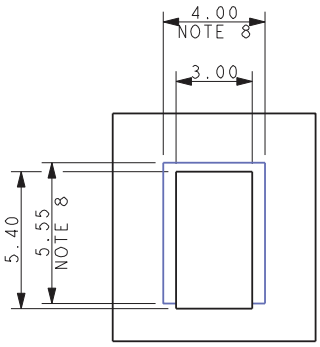

SUGGEST PCB LAYOUT

PACKING DETAILS

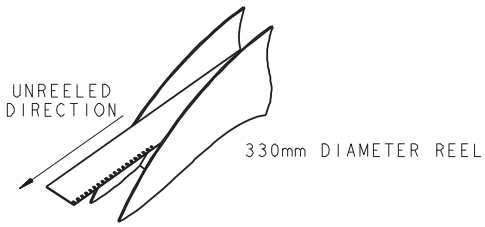

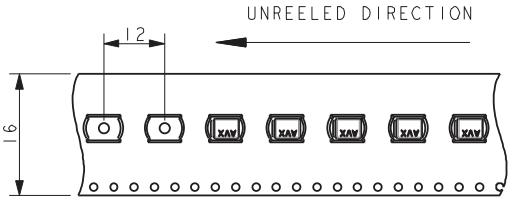

QUANTITY PER REEL 600

KYOCERA AVX | The Important Information/Disclaimer is incorporated in the catalog where these specifications came from or available online at www.avx.com/disclaimer/ by reference and should be reviewed in full before placing any order.

CAPPED 18-24 AWG: 9176-700

2 Position - Wire Stop

18 - 24 AWG 2 WAY IDC CONNECTOR WIRE STOP CAPPED IDC

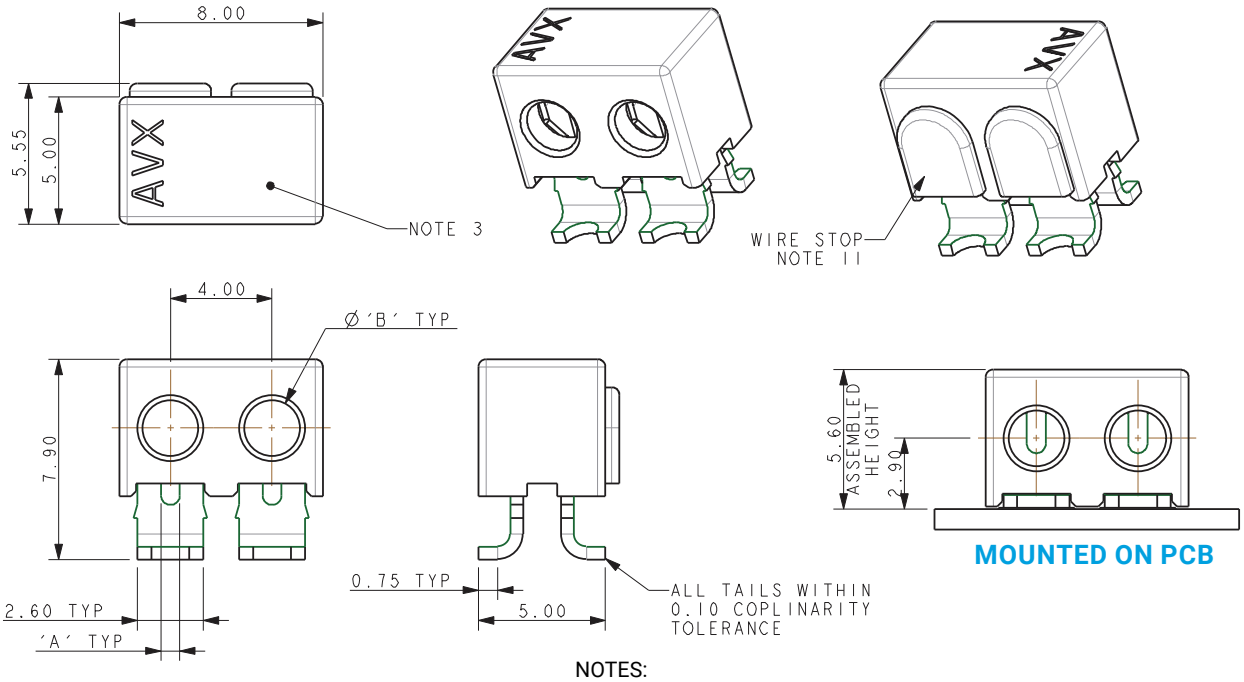

MOUNTED ON PCB

Code	Accepted Wire Gauge	A	Wire Insulation	B
701	18 AWG Stranded	0.74	Ø1.6-2.1	2.1
711	20 AWG Solid and Stranded	0.60	Ø1.6-2.1	2.1
722	22 AWG Solid and Stranded	0.47	Ø 1.1-1.6	1.6
732	24 AWG Solid and Stranded	0.37	Ø 1.1-1.6	1.6

NOTES:

1. 2 WAY CONNECTOR FOR IDC WIRE TO BOARD CONNECTION. PRE-ASSEMBLED WIRE STOP CAP, CODE REFER TO PAGE 27.
2. CONTACT/CAP TO MATCH 20AWG-24AWG SOLID AND STRANDED WIRES, 18AWG WILL ONLY ACCEPT STRANDED WIRES, SEE TABLE.
3. FLAT FACE ON TOP OF CAP TO AID PICK AND PLACE ASSEMBLY.
4. FOR FULL PRODUCT SPECIFICATION ON STANDARD CONNECTORS REFER TO ELCO SPEC 201-01-138, UL COMPONENTS REFER TO ELCO SPEC 201-01-138UL.
5. ASSEMBLY PROCEDURE, REFER TO APPLICATION NOTES 201-01-140.
6. GENERAL TOLERANCE ±0.20 UNLESS STATED.
7. PACKED IN TAPE AND REEL, QUANTITY PER REEL 600.
8. CONNECTOR OUTLINE.
9. CONTACT MATERIAL: TIN PLATED COPPER ALLOY.
10. INSULATION MATERIAL: HIGH TEMPERATURE NYLON, GLASS FILLED. UL94 V-0, COLOR REFER TO PAGE 27.
11. GENERAL TOLERANCE ±0.20 UNLESS STATED.
12. FOR UL PRODUCT CODES UL REFERENCE E90723 (US AND CANADA).

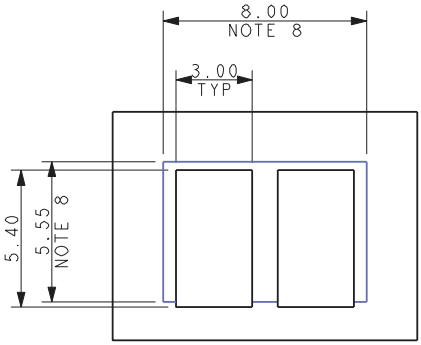

SUGGEST PCB LAYOUT

PACKING DETAILS

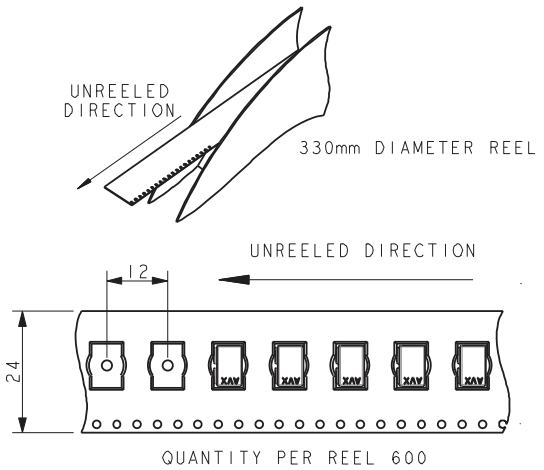

The Important Information/Disclaimer is incorporated in the catalog where these specifications came from or available online at www.avx.com/disclaimer/ by reference and should be reviewed in full before placing any order.

CAPPED 18-24 AWG: 9176-700

3 Position - Wire Stop

18 - 24 AWG 3 WAY IDC CONNECTOR WIRE STOP CAPPED IDC

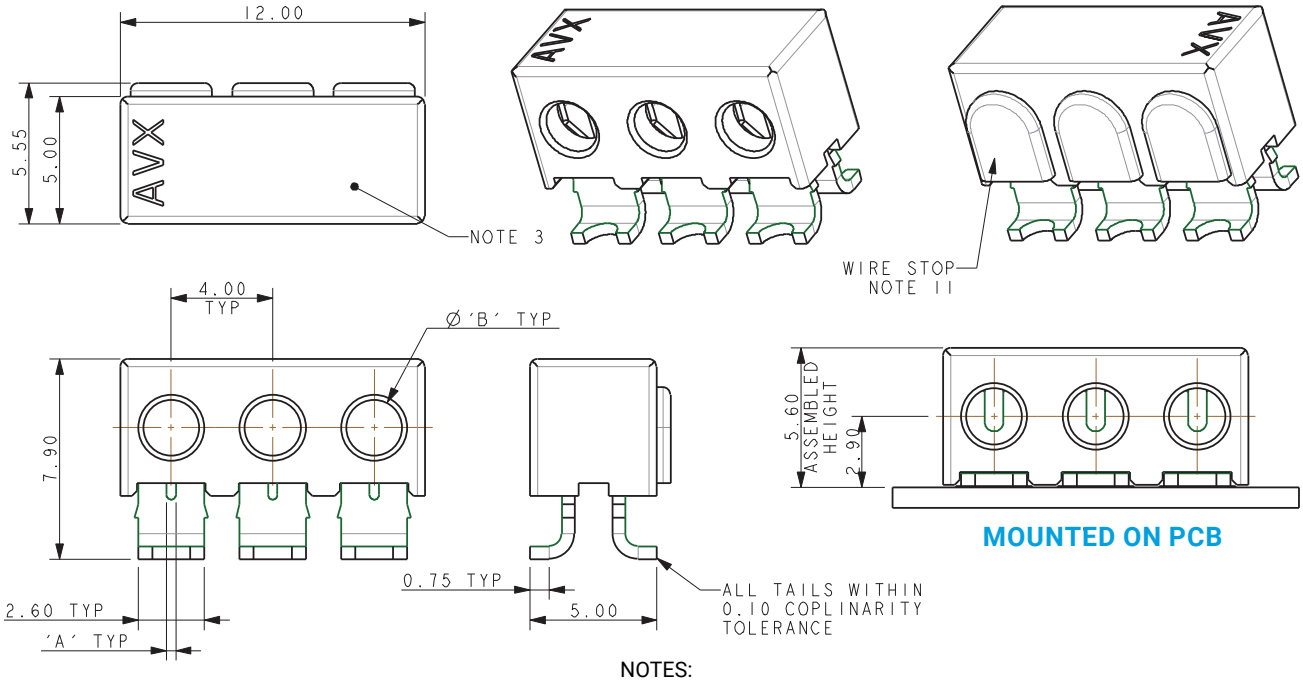

MOUNTED ON PCB

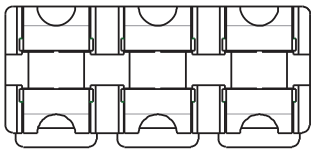

NOTES:

1. 3 WAY CONNECTOR FOR IDC WIRE TO BOARD CONNECTION. PRE-ASSEMBLED WIRE STOP CAP, CODE REFER TO PAGE 27.
2. CONTACT/CAP TO MATCH 20AWG-24AWG SOLID AND STRANDED WIRES, 18AWG WILL ONLY ACCEPT STRANDED WIRES, SEE TABLE.
3. FLAT FACE ON TOP OF CAP TO AID PICK AND PLACE ASSEMBLY.
4. FOR FULL PRODUCT SPECIFICATION ON STANDARD CONNECTORS REFER TO ELCO SPEC 201-01-138, UL COMPONENTS REFER TO ELCO SPEC 201-01-138UL.
5. ASSEMBLY PROCEDURE, REFER TO APPLICATION NOTES 201-01-140.
6. GENERAL TOLERANCE ±0.20 UNLESS STATED.
7. PACKED IN TAPE AND REEL, QUANTITY PER REEL 600.
8. CONNECTOR OUTLINE.
9. CONTACT MATERIAL: TIN PLATED COPPER ALLOY.
10. INSULATION MATERIAL: HIGH TEMPERATURE NYLON, GLASS FILLED. UL94 V-0, COLOR REFER TO PAGE 27.
11. GENERAL TOLERANCE ±0.20 UNLESS STATED.
12. FOR UL PRODUCT CODES UL REFERENCE E90723 (US AND CANADA).

Code	Accepted Wire Gauge	A	Wire Insulation	B
701	18 AWG Stranded	0.74	Ø1.6-2.1	2.1
711	20 AWG Solid and Stranded	0.60	Ø1.6-2.1	2.1
722	22 AWG Solid and Stranded	0.47	Ø 1.1-1.6	1.6
732	24 AWG Solid and Stranded	0.37	Ø 1.1-1.6	1.6

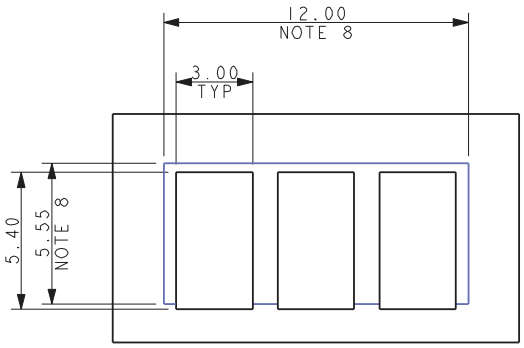

SUGGEST PCB LAYOUT

PACKING DETAILS

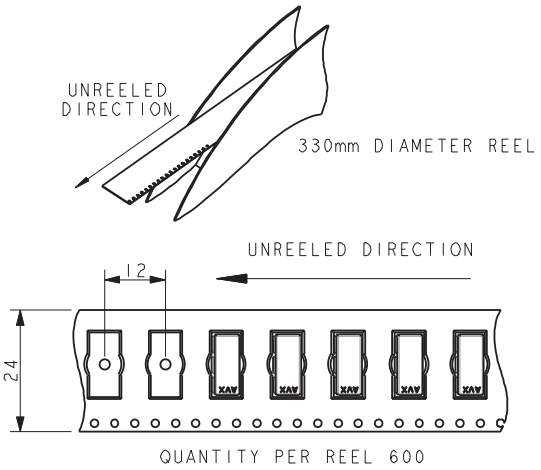

The Important Information/Disclaimer is incorporated in the catalog where these specifications came from or available online at www.avx.com/disclaimer/ by reference and should be reviewed in full before placing any order.

18-24 AWG ASSEMBLED CAPPED IDC CONNECTORS

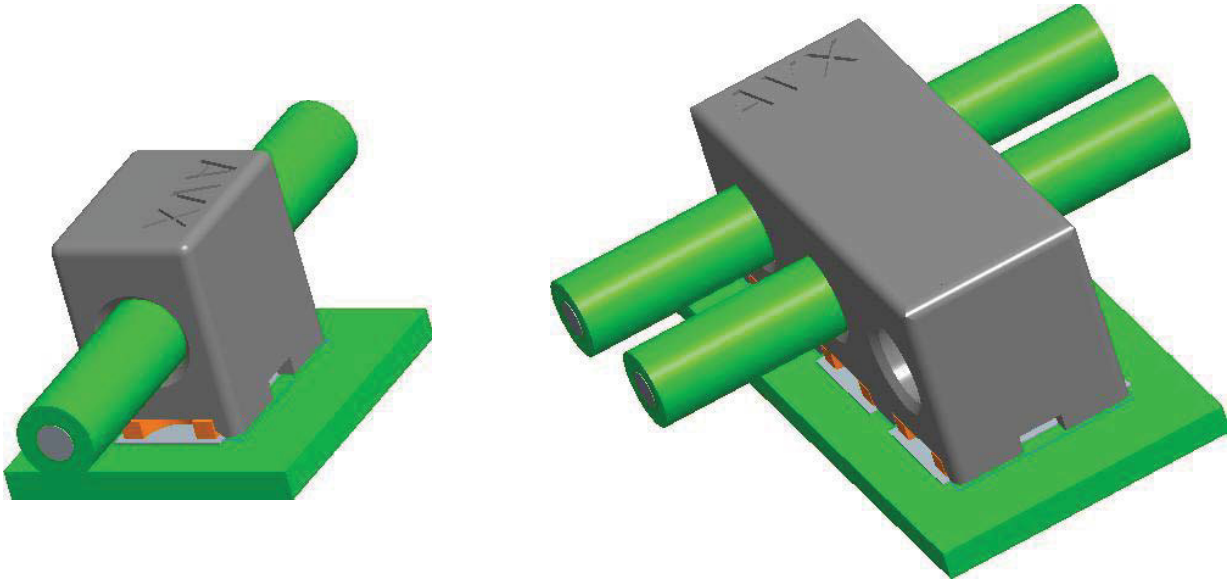

TYPICAL THROUGH WIRE ASSEMBLY

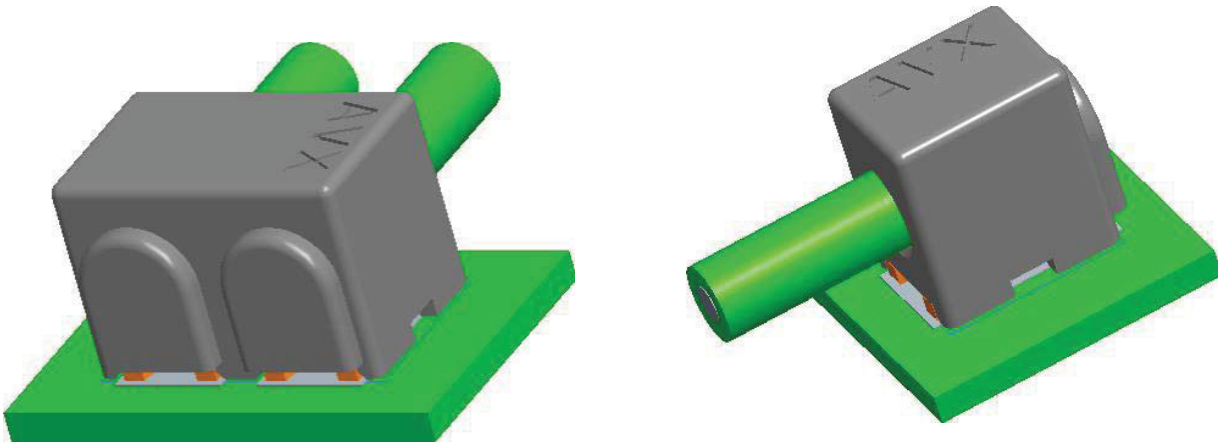

TYPICAL WIRE STOP ASSEMBLY

The Important Information/Disclaimer is incorporated in the catalog where these specifications came from or available online at www.avx.com/disclaimer/ by reference and should be reviewed in full before placing any order.

090721

SINGLE IDC CONTACT 22-28 AWG: 9176-400

General Information

The 917X series of surface mount Insulation Displacement Connectors (IDC) were developed to meet the harsh automotive and industrial market applications for connecting individual wires directly to a PCB ranging from 14 AWG to 28 AWG. This industry proven contact system has been tested to automotive levels of shock, vibration, and temperature cycling to prove their reliability and robustness. This new single contact was developed as a standalone component to enhance the application uses with the IDC technology. The simplicity of inserting a wire into an SMT contact with a small tool or optional retention / termination cap allows a wide range of devices to be connected to the PCB without soldering. In SSL applications specifically, these contacts are used to bring power and signal onto the PCB or are used to daisy chain multiple boards together in a long string. While the IDC contact provides a gas-tight connection to conductor of the wire, the optional cap provides a positive strain relief even in the harshest conditions. In case of repair, the wires can be removed and replace up to three times.

The single 9176-400 series contact and cap accepts 22 AWG to 28 AWG wires with an insulation diameter ranging from 1.0mm to 1.5mm. These dual beam contacts support a 6 amp current rating with a large SMT solder base to provide maximum stability on the PCB. The optional locking strain relief cap acts as the termination tool for severe vibration applications.

APPLICATIONS

- Connecting discrete wire components directly to the PCB
- Bringing power and signals onto a PCB
- Daisy chaining PCB's together to create a continuous string of boards
- Application notes: refer to 201-01-124

FEATURES AND BENEFITS

- IDC contact is supplied in T&R pockets for standard SMT placement
- IDC contact provides a gas-tight connection to the PCB for long term reliability
- Optional termination cap provides additional strain relief for severe environments
- Tested to automotive levels on shock, vibration and temperature cycling for reliability
- Reduced total applied cost versus solder or crimp processes
- Individual contacts can be located anywhere on the PCB based on specific application

ELECTRICAL

- Current Rating: 6 Amps/Contact
- Voltage Rating: Dependant on component proximity

ENVIRONMENTAL

- Operating Temperature: -40°C to +125°C

MECHANICAL

- Insulator Material: Nylon 46: UL94V0
- Contact Material: Phosphor Bronze
- Plating: Tin over Nickel
- Durability: 3 Cycles

HOW TO ORDER – CONTACT OPTIONS

70 — **Prefix**: 70 = Contact

9176 — **Series**

001 — **Number of Ways**

Code	No of Ways	Details
001	1	Page 36

4XX — **Wire Gauge Size**

Code	Accepted Wire Gauge
422	22 Gauge Solid or Stranded
432	24 Gauge Solid or Stranded
442	26 Gauge Solid or Stranded
443	28 Gauge Solid or Stranded

006 — **Plating Option**: 006 = Pure Tin all over

HOW TO ORDER – CAP OPTIONS

60 — **Prefix**: 60 = Cap

9176 — **Series**

001 — **Number of Ways**

Code	No of Ways	Details
001	1	Page 40

415 — **Wire Gauge Size**

Code	Wire Insulation
415	Ø 0.75-1.5

X00 — **Insulator Color**

Code	Color	Application
000	Black	Industrial
100	White	Lighting

RoHS COMPLIANT

CONNECTOR/TOOLING PART NUMBER MATRIX

SERIES 9176-400 IDC				HAND INSERTION TOOLING*		ACCESSORY CAPS		
AWG	Wire Insulation	Positions	Part Number	Plastic (medium volume)	Metal (high volume)	Cap Application Tool	White	Black
22	Ø 1.0 - 1.5	1p	709176001422006	069176702201000	069176702101000	069176702301000	609176001415100	609176001415000
24	Ø 1.0 - 1.5	1p	709176001432006	069176702201000	069176702101000	069176702301000	609176001415100	609176001415000
26	Ø 0.7 - 1.0	1p	709176001442006	069176702201000	069176702101000	069176702301000	609176001415100	609176001415000
28	Ø 0.7 - 1.0	1p	709176001443006	069176702201000	069176702101000	069176702301000	609176001415100	609176001415000

* Hand Insertion Tooling and Cap Application - Universal Hand Tool 067000773001000; Consult Application Notes 201-01-124

Certification: UL File #E90723

The Important Information/Disclaimer is incorporated in the catalog where these specifications came from or available online at www.avx.com/disclaimer/ by reference and should be reviewed in full before placing any order.

CONTACT DETAILS

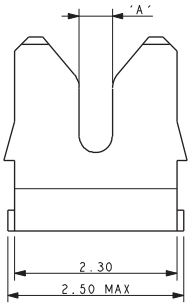

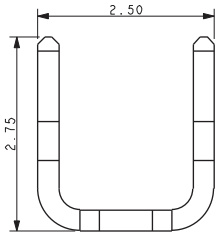

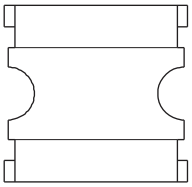

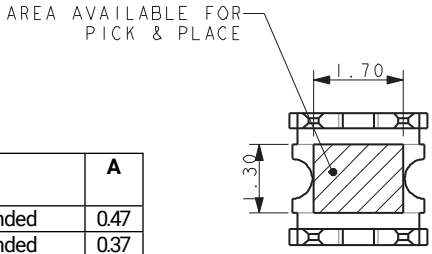

Code	Accepted Wire Gauge	A
422	22AWG Solid or Stranded	0.47
432	24AWG Solid or Stranded	0.37
442	26AWG Solid or Stranded	0.28
443	28AWG Solid or Stranded	0.20

NOTES:
1. CONNECTOR FOR IDC WIRE TO BOARD CONNECTION.
2. CONTACT MATERIAL: PHOSPHOR BRONZE.
3. CONTACT PLATING: PURE TIN.
4. CONNECTOR DESIGNED TO ACCEPT BETWEEN 22AWG AND 28AWG SOLID AND STRANDED WIRE, SEE TABLE.
5. ALL DIMENSIONS ±0.20 UNLESS TOLERANCED.
6. FOR FULL PRODUCT SPECIFICATION REFER TO ELCO SPEC 201-01-126 AND APPLICATION NOTES 201-01-124.
7. SMT PCB LAYOUT, REFER TO PAGE 37.
8. PACKING IN TAPE AND REEL, QUANTITY 2000 PER REEL.
9. WHEN REQUIRED, MATCHING CAP DETAILS ON DRAWING 60-9176-001-4XX-X06S.
10. ASSEMBLY TOOLING ON PAGE 39 FOR WIRE INTO CONTACT AND PAGE 38 FOR CAP.
11. UL REFERENCE E90723, THIS UL REFERENCE ALSO APPLIES WHEN COMBINED WITH KYOCERA AVX SPECIFIED OPTIONAL CAP.

PACKING DETAILS

REEL QTY	2 000
LEADER	480MM
TRAILER	120MM

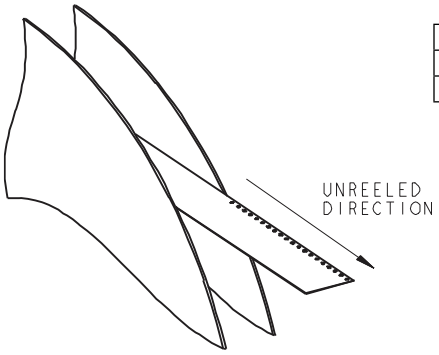

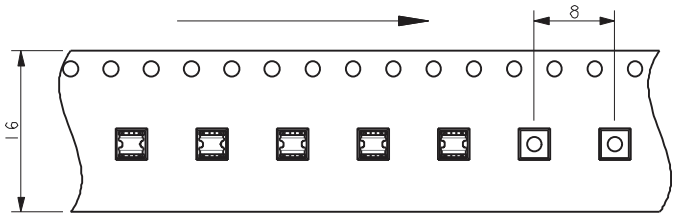

The Important Information/Disclaimer is incorporated in the catalog where these specifications came from or available online at www.avx.com/disclaimer/ by reference and should be reviewed in full before placing any order.

22-28 AWG IDC WIRE TO BOARD CONNECTOR
SINGLE CONTACT

SMT PCB LAYOUT

PURE TIN PADS

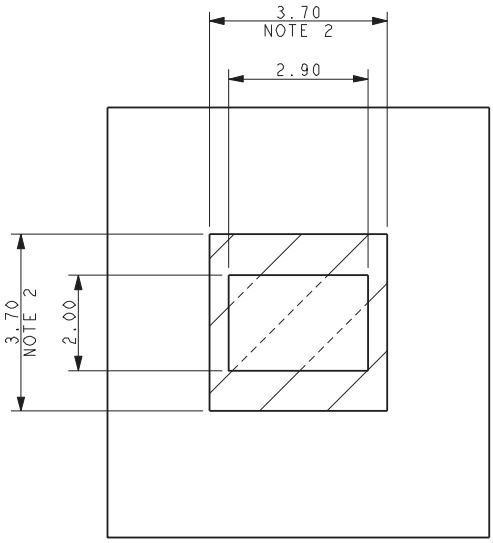

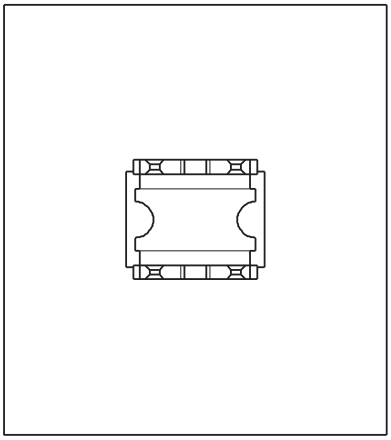

ORIENTATION OF CONTACT ON PAD

ASSEMBLED/INSTALLED PRODUCTS

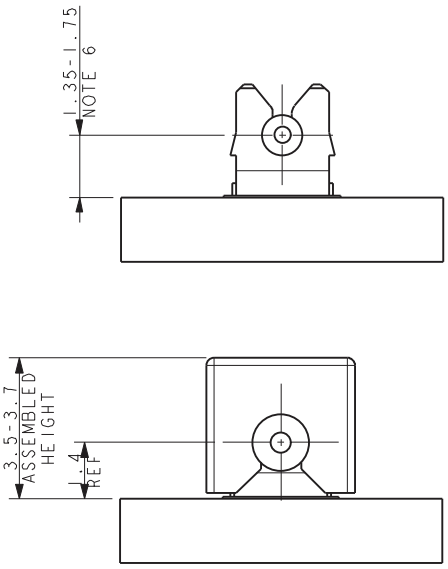

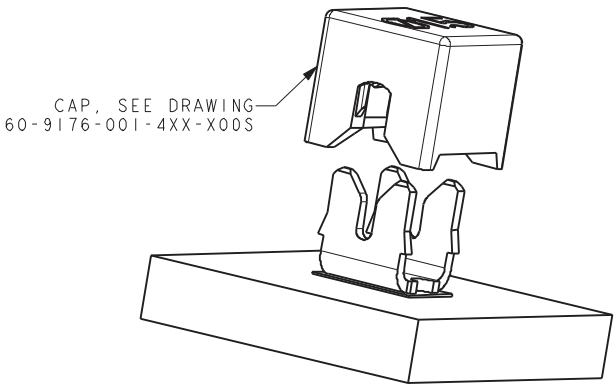

NOTES:
1. CONNECTOR CAN BE USED WITH CONTACT ONLY OR WITH OPTIONAL CAP.
2. OUTLINE OF CAP WHERE USED.
3. FOR FULL PRODUCT SPECIFICATION REFER TO ELCO SPEC 201-01-126 AND APPLICATION NOTES 201-01-124.
4. ALL DIMENSIONS ±0.20 UNLESS TOLERANCED.
5. ASSEMBLY TOOLING ON PAGE 39 FOR WIRE INTO CONTACT AND PAGE 38 FOR CAP.
6. WIRE CENTER LINE HEIGHT ABOVE THE PCB. THIS INCLUDES AN ALLOWANCE OF 0.10MM FOR SOLDER AND 0.035MM FOR PAD THICKNESS. NO ALLOWANCE HAS BEEN MADE FOR SOLDER RESIST OR OTHER FEATURES.

The Important Information/Disclaimer is incorporated in the catalog where these specifications came from or available online at www.avx.com/disclaimer/ by reference and should be reviewed in full before placing any order.

ASSEMBLY TOOLING – CAP USED

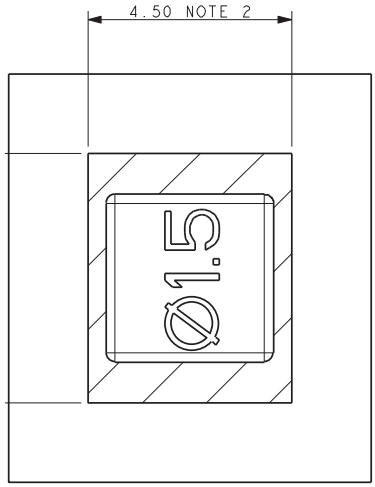

NOTES:
1. ASSEMBLY TOOLING FOR CAP.
2. MINIMUM AREA OF PCB TO BE KEPT CLEAR OF COMPONENTS, TRACKS PERMISSIBLE.
3. WIRE AND CAP INSERTED IN ONE OPERATION.
4. REFER TO APPLICATION NOTE 201-01-124 FOR FURTHER INFORMATION.
5. REFER TO PAGE 39 FOR ASSEMBLY WITHOUT CAP.

CAP APPLICATION TOOL – PLASTIC
06-9176-7023-01-000

METAL TOOL – HIGH VOLUME
06-9176-7024-01-000

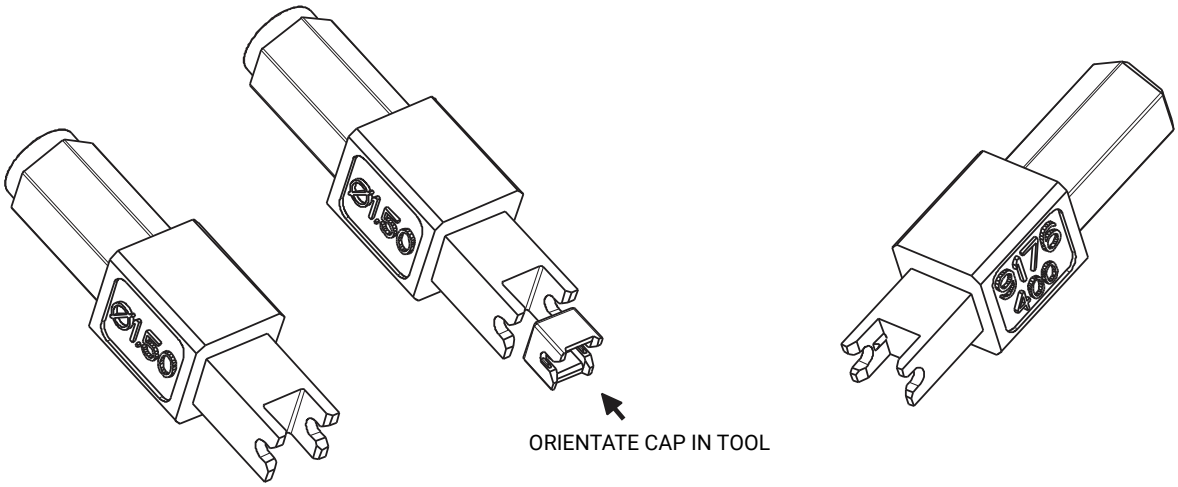

UNIVERSAL HANDLE
06-7000-7730-01-000

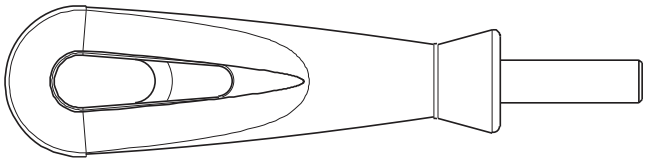

CONNECTOR/TOOLING PART NUMBER MATRIX

SERIES 9176-400 IDC				HAND INSERTION TOOLING*		ACCESSORY CAPS		
AWG	Wire Insulation	Positions	Part Number	Plastic (medium volume)	Metal (high volume)	Cap Application Tool	White	Black
22	Ø 1.0 - 1.5	1p	709176001422006	069176702201000	069176702101000	069176702301000	609176001415100	609176001415000
24	Ø 1.0 - 1.5	1p	709176001432006	069176702201000	069176702101000	069176702301000	609176001415100	609176001415000
26	Ø 0.7 - 1.0	1p	709176001442006	069176702201000	069176702101000	069176702301000	609176001415100	609176001415000
28	Ø 0.7 - 1.0	1p	709176001443006	069176702201000	069176702101000	069176702301000	609176001415100	609176001415000
* Hand Insertion Tooling and Cap Application - Universal Hand Tool 067000773001000; Consult Application Notes 201-01-124								

The Important Information/Disclaimer is incorporated in the catalog where these specifications came from or available online at www.avx.com/disclaimer/ by reference and should be reviewed in full before placing any order.

ASSEMBLY TOOLING – CAP NOT USED
WIRE ONTO CONTACT

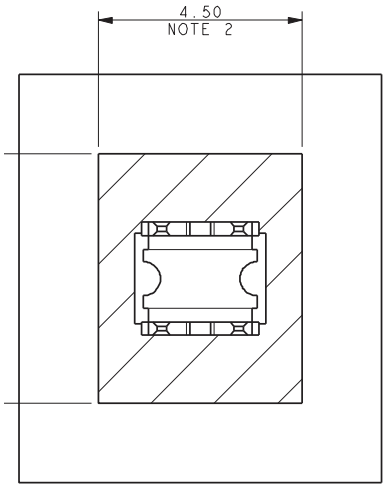

METAL TOOL
HIGH VOLUME
06-9176-7021-01-000

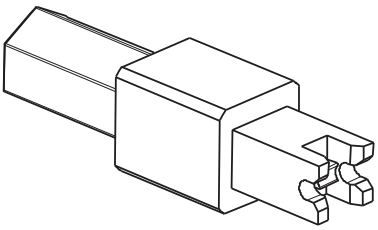

PLASTIC TOOL
LOW/MEDIUM VOLUME
06-9176-7022-01-000

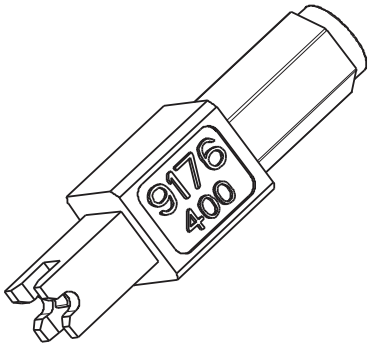

UNIVERSAL HANDLE
06-7000-7730-01-000

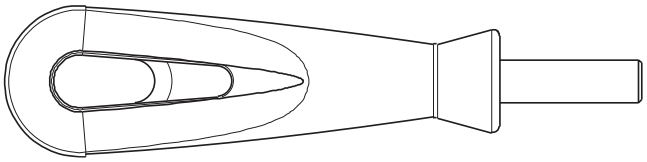

NOTES:
1. ASSEMBLY TOOLING FOR CONTACT ONLY. NO CAP USED.
2. MINIMUM AREA OF PCB TO BE KEPT CLEAR OF COMPONENTS, TRACKS PERMISSIBLE.
3. REFER TO APPLICATION NOTE 201-01-124 FOR FURTHER INFORMATION.
4. INSERT CORRECT TOOL INTO HANDLE, MAGNETIC RETENTION.
5. REFER TO PAGE 38 FOR ASSEMBLY WITH CAP.

The Important Information/Disclaimer is incorporated in the catalog where these specifications came from or available online at www.avx.com/disclaimer/ by reference and should be reviewed in full before placing any order.

CAP DETAILS

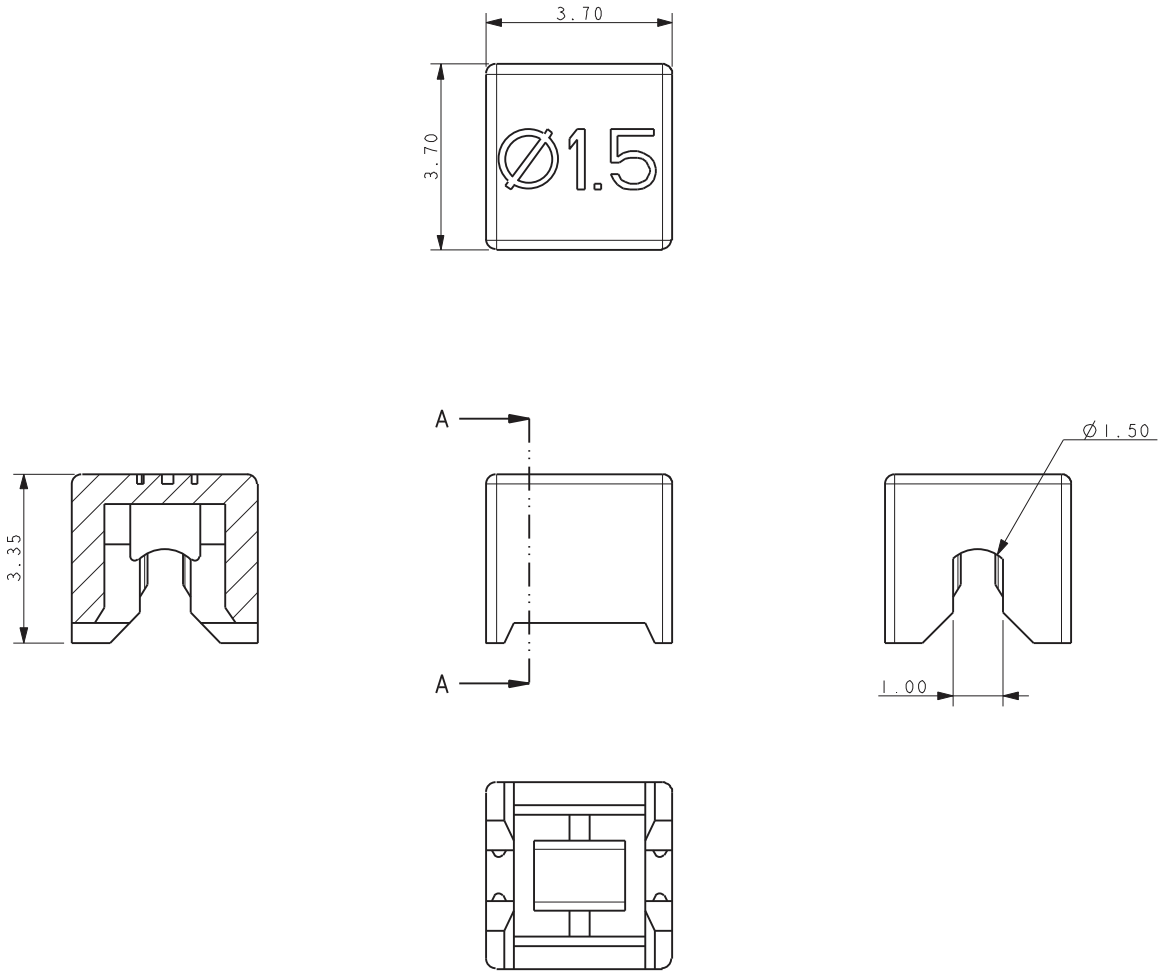

NOTES:
1. CAP FOR IDC WIRE TO BOARD CONNECTION.
2. CAP MATERIAL: GLASS FILLED NYLON 46, COLOR SEE PAGE 35.
3. CAPS DESIGNED TO ACCOMMODATE WIRE INSULATION DIAMETERS 0.75MM TO 1.5MM.
4. ALL DIMENSIONS ±0.20 UNLESS TOLERANCED.
5. FOR FULL PRODUCT SPECIFICATION REFER TO ELCO SPEC 201-01-126, APPLICATION NOTES 201-01-124.
6. PACKING IN BAGS, QUANTITY 2000 PER BAG.
7. FOR INSTALATION DETAILS REFER TO DRAWING 70-9176-001-4XX-006S.

The Important Information/Disclaimer is incorporated in the catalog where these specifications came from or available online at www.avx.com/disclaimer/ by reference and should be reviewed in full before placing any order.

SINGLE IDC CONTACT 18-24 AWG: 9176-500

General Information

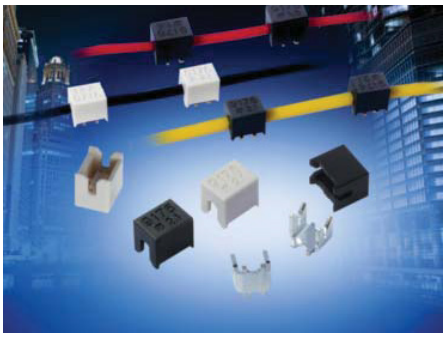

The 917X series of surface mount Insulation Displacement Connectors (IDC) were developed to meet the harsh automotive and industrial market applications for connecting individual wires directly to a PCB ranging from 14 AWG to 28 AWG. This industry proven contact system has been tested to automotive levels of shock, vibration, and temperature cycling to prove their reliability and robustness. This new single contact was developed as a standalone component to enhance the application uses with the IDC technology. The simplicity of inserting a wire into an SMT contact with a small tool or optional retention / termination cap allows a wide range of devices to be connected to the PCB without soldering. In SSL applications specifically, these contacts are used to bring power and signal onto the PCB or are used to daisy chain multiple boards together in a long string. While the IDC contact provides a gas-tight connection to conductor of the wire, the optional cap provides a positive strain relief even in the harshest conditions. In case of repair, the wires can be removed and replace up to three times.

The single 9176 series contact and cap accepts 18 AWG to 24 AWG wires with an insulation diameter ranging from 1.1mm to 2.1mm. These dual beam contacts support a 10 amp current rating with a large SMT solder base to provide maximum stability on the PCB. The optional locking strain relief cap acts as the termination tool for severe vibration applications.

APPLICATIONS

- Connecting discrete wire components directly to the PCB
- Bringing power and signals onto a PCB
- Daisy chaining PCB's together to create a continuous string of boards
- Application notes: refer to 201-01-124

FEATURES AND BENEFITS

- IDC contact is supplied in T&R pockets for standard SMT placement
- IDC contact provides a gas-tight connection to the PCB for long term reliability
- Optional termination cap provides additional strain relief for severe environments
- Tested to automotive levels on shock, vibration and temperature cycling for reliability
- Reduced total applied cost versus solder or crimp processes
- Individual contacts can be located anywhere on the PCB based on specific application

ELECTRICAL

- Current Rating: 10 Amps/Contact
- Voltage Rating: Dependant on component proximity

ENVIRONMENTAL

- Operating Temperature: -40°C to +125°C

MECHANICAL

- Insulator Material: Nylon 46: UL94V0
- Contact Material: Phosphor Bronze
- Plating: Tin over Nickel
- Durability: 3 Cycles

HOW TO ORDER – CONTACT OPTIONS

70 — **Prefix**: 70 = Contact

9176 — **Series**

001 — **Number of Ways**

Code	No of Ways	Details
001	1	Page 39

4XX — **Wire Gauge Size**

Code	Accepted Wire Gauge
501	18 Gauge Stranded
511	20 Gauge Solid or Stranded
522	22 Gauge Solid or Stranded
532	24 Gauge Solid or Stranded

006 — **Plating Option**: 006 = Pure Tin all over

HOW TO ORDER – CAP OPTIONS

60 — **Prefix**: 60 = Cap

9176 — **Series**

001 — **Number of Ways**

Code	No of Ways	Details
001	1	Page 43

5XX — **Wire Gauge Size**

Code	Wire Insulation (AWG)
516	1.1-1.6 (22-24)
521	1.6-2.1 (18-20)

X00 — **Insulator Color**

Code	Color	Application
000	Black	Industrial
100	White	Lighting

RoHS COMPLIANT

CONNECTOR/TOOLING PART NUMBER MATRIX

SERIES 9176-500 IDC				HAND INSERTION TOOLING*		ACCESSORY CAPS		
AWG	Wire Insulation	Positions	Part Number	Plastic (medium volume)	Metal (high volume)	Cap Application Tool	White	Black
18	Ø 1.6 - 2.1	1p	709176001501006	069176702001000	069176701901000	069176701801000	609176001521100	609176001521000
20	Ø 1.6 - 2.1	1p	709176001511006	069176702001000	069176701901000	069176701801000	609176001521100	609176001521000
22	Ø 1.1 - 1.6	1p	709176001522006	069176702002000	069176701902000	069176701801000	609176001516100	609176001516000
24	Ø 1.1 - 1.6	1p	709176001532006	069176702002000	069176701902000	069176701801000	609176001516100	609176001516000

*** Hand Insertion Tooling and Cap Application - Universal Hand Tool 067000773001000; Consult Application Notes 201-01-124**

Certification: UL File #E90723

The Important Information/Disclaimer is incorporated in the catalog where these specifications came from or available online at www.avx.com/disclaimer/ by reference and should be reviewed in full before placing any order.

SINGLE IDC CONTACT 18-24 AWG: 9176-500

Contact Details

CONTACT DETAILS

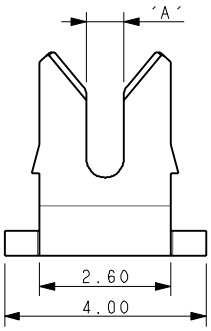

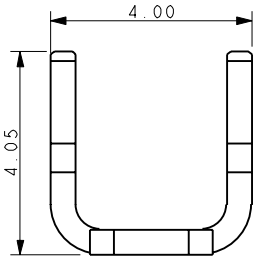

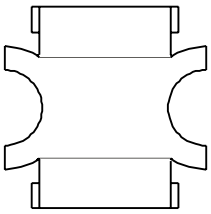

RoHS COMPLIANT

Code	Accepted Wire Gauge	A
501	18 AWG Stranded	0.74
511	20 AWG Solid and Stranded	0.60
522	22 AWG Solid and Stranded	0.47
532	24 AWG Solid and Stranded	0.37

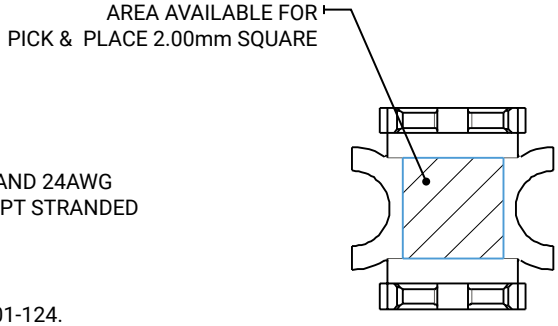

NOTES:
1. CONNECTOR FOR IDC WIRE TO BOARD CONNECTION.
2. CONTACT MATERIAL: PHOSPHOR BRONZE.
3. CONTACT PLATING: PURE TIN.
4. CONNECTOR DESIGNED TO ACCEPT BETWEEN 20AWG AND 24AWG SOLID AND STRANDED WIRES, 18AWG WILL ONLY ACCEPT STRANDED WIRES, SEE TABLE.
5. ALL DIMENSIONS ±0.20 UNLESS TOLERANCED
6. FOR FULL PRODUCT SPECIFICATION REFER TO ELCO SPEC 201-01-126 AND APPLICATION NOTES 201-01-124.
7. SMT PCB LAYOUT, REFER TO SHEET 3.
8. PACKING IN TAPE AND REEL, QUANTITY 1000 PER REEL.
9. WHEN REQUIRED, MATCHING CAP DETAILS ON DRAWING 60-9176-001-5XX-X00S
10. ASSEMBLY TOOLING ON SHEETS 4 (WITH CAP) AND 5 (WITHOUT CAP).

PACKING DETAILS

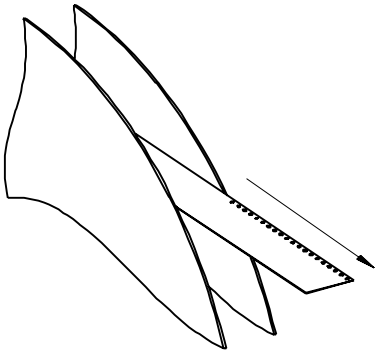

REEL QTY	1000
LEADER	480mm
TRAILER	120mm

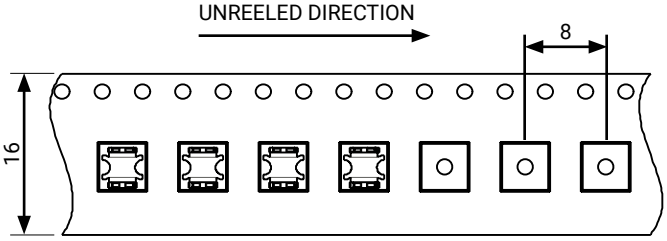

The Important Information/Disclaimer is incorporated in the catalog where these specifications came from or available online at www.avx.com/disclaimer/ by reference and should be reviewed in full before placing any order.

18-24 AWG IDC WIRE TO BOARD CONNECTOR SINGLE CONTACT

SMT PCB LAYOUT

PURE TIN PADS

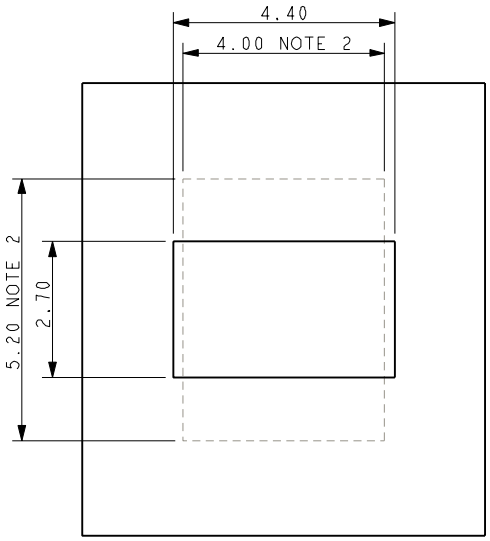

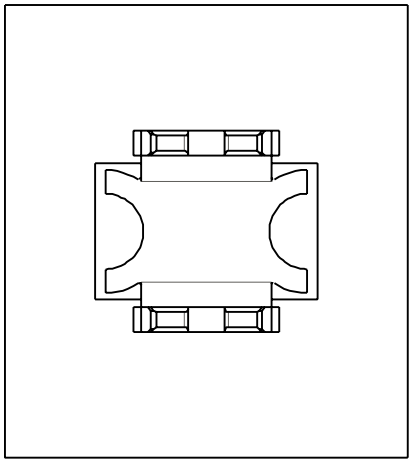

ORIENTATION OF CONTACT ON PAD

ASSEMBLED/INSTALLED PRODUCTS

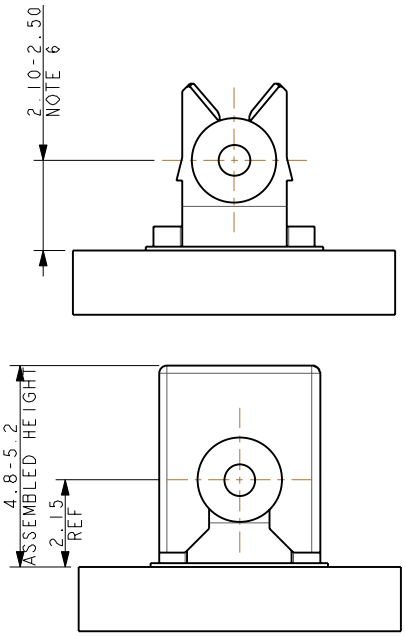

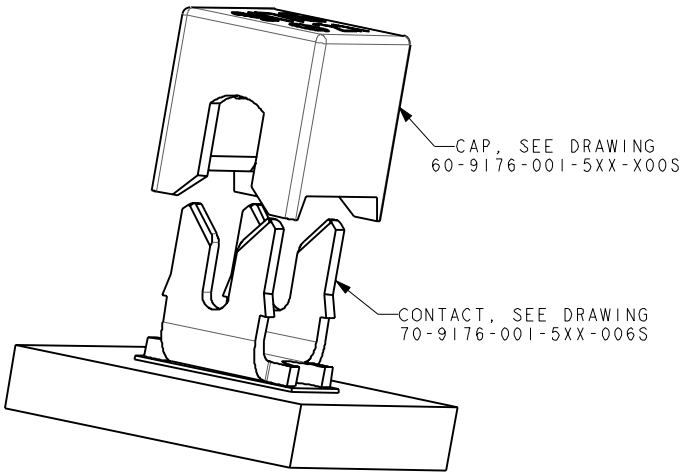

NOTES:
1. CONNECTOR CAN BE USED WITH CONTACT ONLY OR WITH OPTIONAL CAP.
2. OUTLINE OF CAP WHEN USED.
3. FOR FULL PRODUCT SPECIFICATION REFER TO ELCO SPEC 201-01-126 AND 201-01-124.
4. ALL DIMENSIONS ±0.20 UNLESS TOLERANCED.
5. ASSEMBLY TOOLING ON SHEETS 4 (WITH CAP) AND 5 (WITHOUT CAP).
6. WIRE CENTRE LINE HEIGHT ABOVE THE PCB, THIS INCLUDES AN ALLOWANCE OF 0.10MM FOR SOLDER AND

The Important Information/Disclaimer is incorporated in the catalog where these specifications came from or available online at www.avx.com/disclaimer/ by reference and should be reviewed in full before placing any order.

ASSEMBLY TOOLING – CAP USED

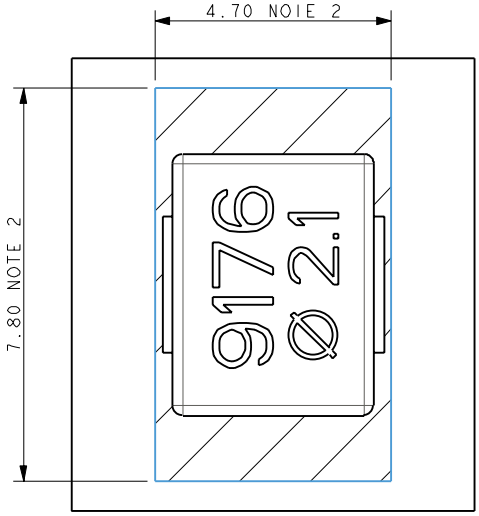

NOTES:
1. ASSEMBLY TOOLING FOR CAP.
2. AREA OF PCB TO BE KEPT CLEAR OF COMPONENTS, TACKS PERMISSIBLE.
3. WIRE AND CAP INSERTED IN ONE OPERATION.
4. REFER TO APPLICATION NOTE 201-01-124 FOR FURTHER INFORMATION.
5. REFER BELOW WHEN CONTACT USED WITHOUT CAP.

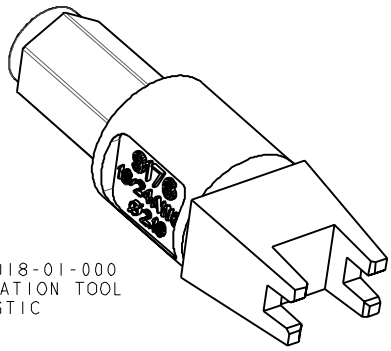

06-9176-7018-01-000
CAP APPLICATION TOOL
PLASTIC

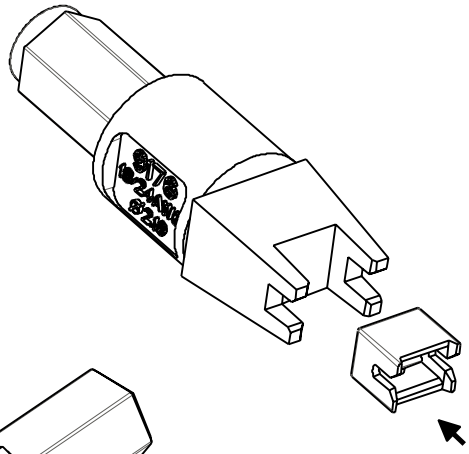

ORIENTATE CAP IN TOO

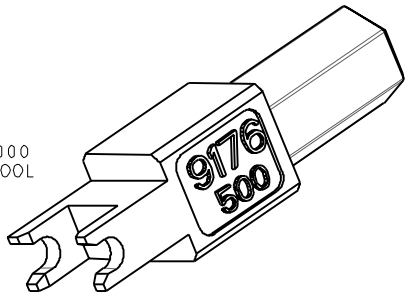

06-9176-7025-01-000
CAP APPLICATION TOOL
METAL

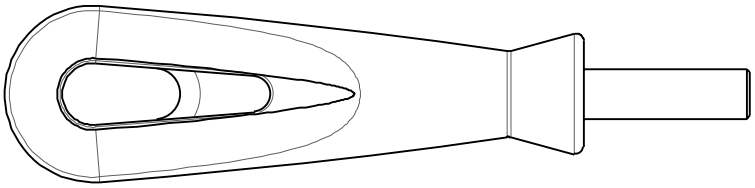

06-7000-7730-01-000
UNIVERSAL HANDLE

The Important Information/Disclaimer is incorporated in the catalog where these specifications came from or available online at www.avx.com/disclaimer/ by reference and should be reviewed in full before placing any order.

ASSEMBLY TOOLING – CAP NOT USED WIRE ONTO CONTACT

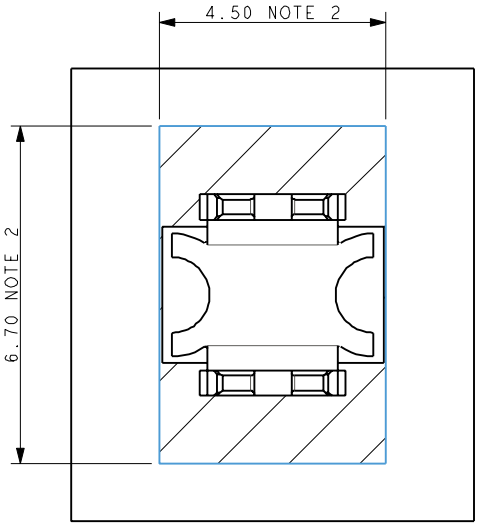

NOTES:
1. ASSEMBLY TOOLING FOR CONTACT ONLY, NO CAP USED.
2. MINIMUM AREA OF PCB TO BE KEPT CLEAR OF COMPONENTS, TRACKS PERMISSIBLE.
3. REFER TO TABLE FOR CORRECT TOOL/WIRE COMBINATION.
4. REFER TO APPLICATION NOTE 201-01-124 FOR FURTHER INFORMATION

WIRE INSULATION Ø	METAL TOOL HIGH VOLUME	PLASTIC TOOL SMALL TO MEDIUM VOLUME	HANDLE
1.10 to 1.60	06-9176-7019-02-000	06-9176-7020-02-000	06-7000-7730-01-000
1.60 to 2.10	06-9176-7019-01-000	06-9176-7020-01-000	06-7000-7730-01-000

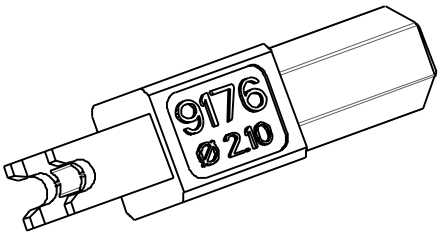

06-9176-7019-01-000
06-9176-7020-01-000
2.1Ø WIRE

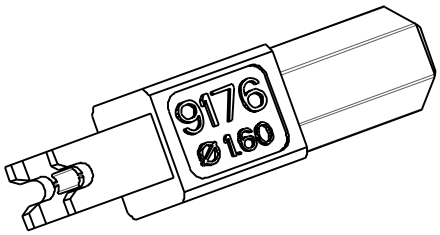

06-9176-7019-02-000
06-9176-7020-02-000
1.6Ø WIRE

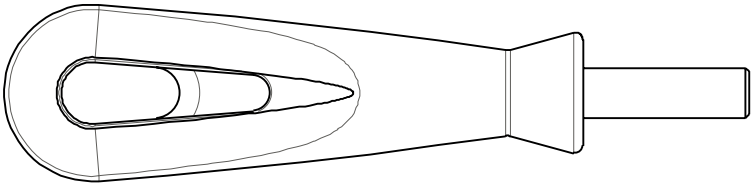

06-7000-7730-01-000
UNIVERSAL HANDLE

The Important Information/Disclaimer is incorporated in the catalog where these specifications came from or available online at www.avx.com/disclaimer/ by reference and should be reviewed in full before placing any order.

CAP DETAILS

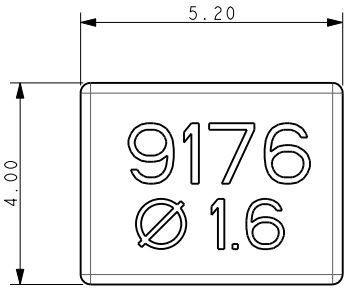

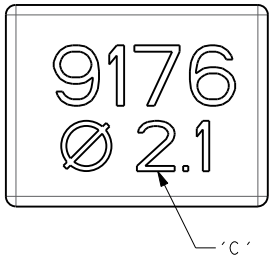

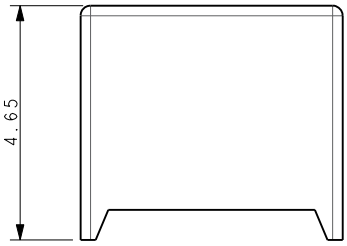

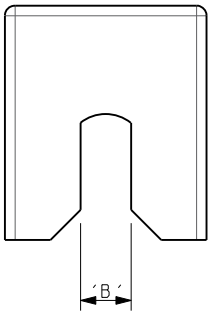

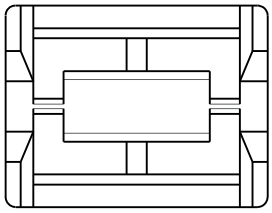

Code	Insulator Diameter (AWG)	B	Text C
516	1.1 to 1.6 (22-24)	1.00	Ø 1.6
521	1.6 to 2.1 (18-20)	1.50	Ø 2.1

NOTES:
1. CAP FOR IDC WIRE TO BOARD CONNECTION.
2. CAP MATERIAL: GLASS FILLED NYLON 46, COLOR SEE PAGE 41.
3. CAPS DESIGNED TO ACCOMMODATE WIRE INSULATION DIAMETERS 1.1MM TO 2.1MM.
4. ALL DIMENSIONS FOR REFERENCE UNLESS OTHERWISE STATED.
5. FOR FULL PRODUCT SPECIFICATION REFER TO ELCO SPEC 201-01-106, APPLICATION NOTES 201-01-124.
6. PACKING IN BAGS, QUANTITY 1000 PER BAG.
7. FOR INSTALATION DETAILS REFER TO DRAWING 70-9176-001-XX-006S.

The Important Information/Disclaimer is incorporated in the catalog where these specifications came from or available online at www.avx.com/disclaimer/ by reference and should be reviewed in full before placing any order.

SINGLE IDC CONTACT 12-18 AWG: 9177-500

General Information

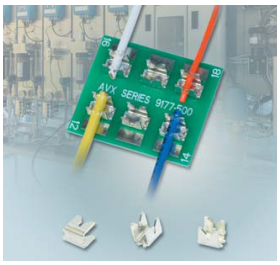

GENERAL DESCRIPTION

AVX's STRIPT™, insulation displacement naked contact technology provides cost effective, insulator-less, wire-to-board connection for discrete wire applications. Designed from the ground up to function just like a traditional

insulated connector, these UL certified contacts have been industry proven for many years. This 9177-500 series has been designed to support the larger wire gauges from a robustness and current rating perspective.

APPLICATIONS

- Industrial motor controls, drives & pumps
- Commercial building wiring and electrical systems
- Outdoor/Transportation lighting
- Solar and alternative energy

ELECTRICAL

- Current Rating: 15
- Voltage Rating: 600 VAC

ENVIRONMENTAL

- Operating Temperature: -40ºC to +125ºC

FEATURES AND BENEFITS

- Proven "gas tight" cold welded wire termination
- Redundant contact systems provides enhanced wire retention and high current carrying capabilities
- Cost effective STRIPT™ insulator-less contact system

MECHANICAL

- Contact Material: Phosphor Bronze
- Contact Plating: Pure tin over nickel
- Durability: 3 termination cycles

HOW TO ORDER

70	9177	001	5XX	006
Prefix	Series	No. of Ways 001 = 1	Description 591 = 12AWG Stranded and Solid 501 = 14AWG Stranded and Solid 512 = 16AWG Stranded and Solid 522 = 18AWG Stranded and Solid	Plating 006 = Pure Tin all over

RoHS COMPLIANT

Certification: UL File #E90723

CONTACT DETAIL

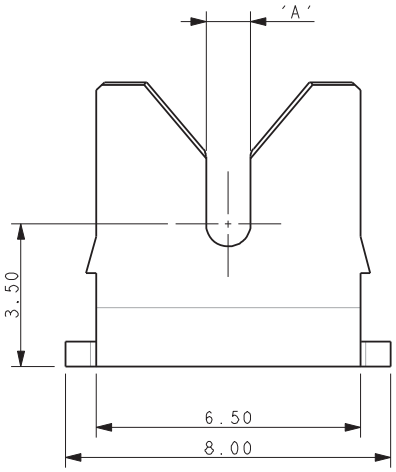

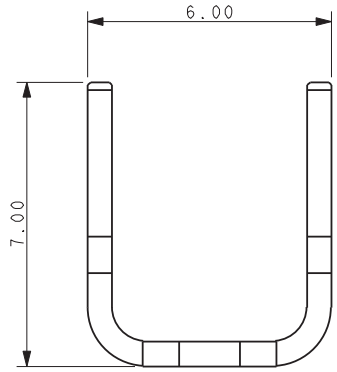

Code	Accepted Wire Gauge	A
591	12AWG Stranded and Solid	1.50
501	14AWG Stranded and Solid	1.10
512	16AWG Stranded and Solid	0.82
522	18AWG Stranded and Solid	0.72

NOTES:
1. CONNECTOR FO IDC WIRE TO BOARD CONNECTION.
2. CONTACT MATERIAL: PHOSPHORE BRONZE.
3. CONTACT PLATING: PURE TIN.
4. CONTACTS DESIGNED TO ACCEPT BETWEEN 12 AND 18 GAUGE STANDED WIRE, SEE TABLE.
5. ALL DIMENSIONS FOR REFERENCE UNLESS OTHERWISE STATED.
6. FOR FULL PRODUCT SPECIFICATIONS REFER TO AVX SPECIFICATION 201-01-208 AND APPLICATION NOTES 201-01-209.
7. SMT PCB LAYOUT, REFER TO PAGE 3.
8. PACKING IN TAPE AND REEL, QUANTITY PER REEL 700.
9. ASSEMBLY TOOLING ON PAGE 4.
10. UL REFERENCE E90723 (US AND CANADA).

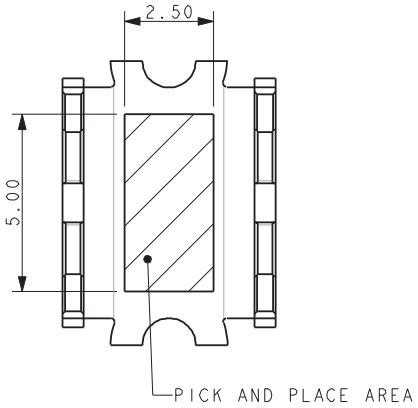

PACKING DETAILS

REEL QTY	700
LEADER	480MM
TRAILER	120MM

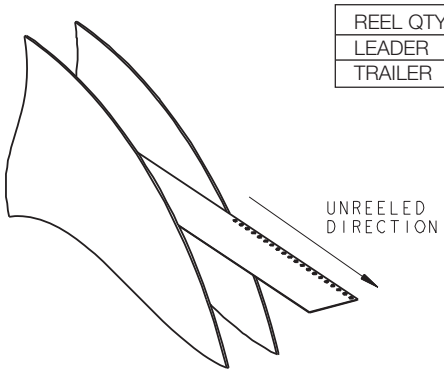

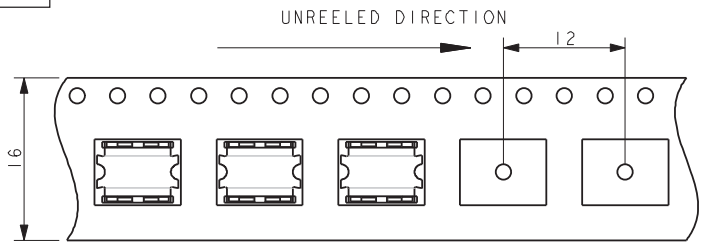

The Important Information/Disclaimer is incorporated in the catalog where these specifications came from or available online at www.avx.com/disclaimer/ by reference and should be reviewed in full before placing any order.

12-18 AWG IDC WIRE TO BOARD CONNECTOR SINGLE CONTACT

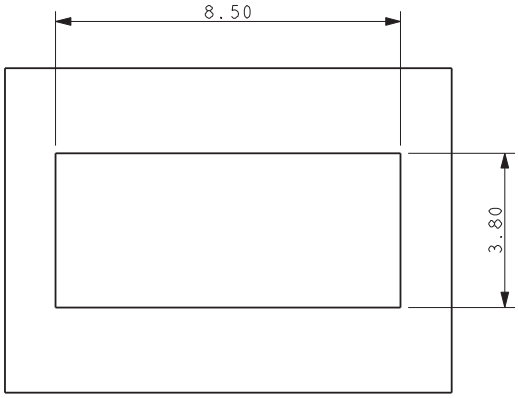

SUGGESTED PCB LAYOUT

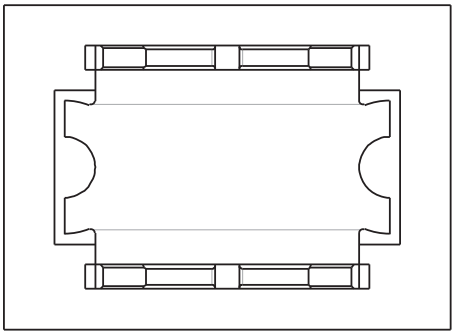

ORIENTATION OF CONTENT ON PAD

NOTES:
1. FOR FULL PRODUCT SPECIFICATION REFER TO AVX SPEC 201-01-208 AND 201-01-209
2. DIMENSIONS SHOWN ARE REFERENCE DIMENSIONS.
3. ASSEMBLY TOOLING ON PAGE 4.

The Important Information/Disclaimer is incorporated in the catalog where these specifications came from or available online at www.avx.com/disclaimer/ by reference and should be reviewed in full before placing any order.

ASSEMBLY TOOLING

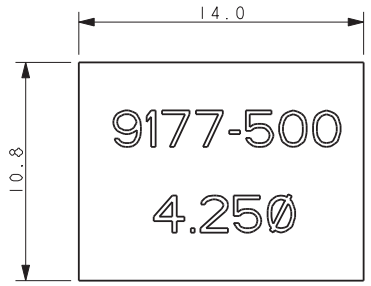

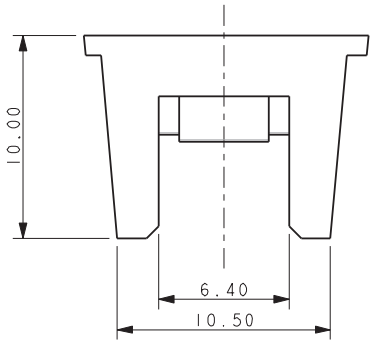

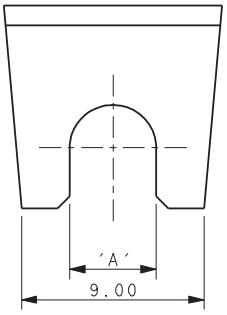

Wire Guage	Max Insulation (Dimensions 'A')	Tool Number Metal Tool for High Volume	Tool Numbere Plastic Tool for Small to Medium Volume
12-18 AWG	ø 4.25	06-9177-7020-01-001	06-9177-7022-01-001
12-18 AWG	ø 3.50	06-9177-7020-02-001	06-9177-7022-02-001
12-18 AWG	ø 2.75	06-9177-7020-03-001	06-9177-7022-03-001

NOTES:
1. ASSEMBLY TOOLING FOR CONTACTS 70-9177-001-5XX-006 ONLY.
2. MINIMUM AREA OF PCB TO BE KEPT CLEAR OF COMPONENTS. TRACKS PERMISSIBLE.
3. MAXIMUM COMPONENT HEIGHT 9.0MM IN THIS AREA.
4. REFER TO TABLE FOR CORRECT TOOL/WIRE COMBINATION.
5. REFER TO APPLICATION NOTE 201-01-209 FOR FURTHER INFORMATION.
6. DIMENSIONS FOR TOOL ARE REFERENCE DIMENSIONS.

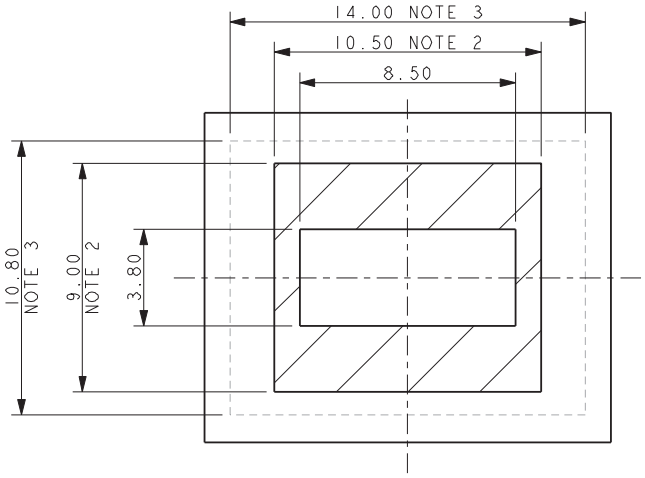

The Important Information/Disclaimer is incorporated in the catalog where these specifications came from or available online at www.avx.com/disclaimer/ by reference and should be reviewed in full before placing any order.

SINGLE TINE PTH 18-24 AWG: 9176-600

General Information

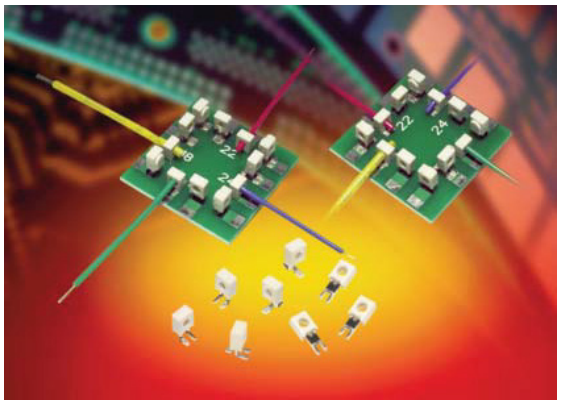

The market and applications for simple and reliable discrete Wire-to-Board (WTB) connectors continue to evolve. Developed for harsh industrial and automotive applications, Insulation Displacement Connectors (IDC) have been used in hundreds of applications connecting wires to PCB's from transportation wiring to every day LED lighting and smart meter/sensor connections. Size, performance and simplicity have been the key factors for selecting this connector when long term reliability is critical.

This single contact version of the proven 9176 family of connectors is the first in Plated Through Hole (PTH) termination. While supporting all of the features and benefits from the SMT offering, this connector provides a new option for a small, cost effective and high performance WTB solution.

APPLICATIONS

- Machine Controls: motors, drives, solenoids, sensors, fans and pumps
- Commercial Buildings: controls, security, fire and sensors
- Smart Grid: meters, breakers and panels
- SSL/LED: bulbs, fixtures, signage and streetlights
- Application notes: reference 201-01-142

FEATURES AND BENEFITS

- IDC contact provides a gas-tight connection to the PCB for long term reliability
- Plastic cap retains the contact and then acts as the assembly tool to terminate the wires; no special tooling.
- Tested to automotive levels on shock, vibration and temperature cycling for reliability
- The IDC contact reduces the total applied cost versus solder or crimp processes
- Connectors are available in two configurations for maximum flexibility: End and Through Wire

ELECTRICAL

- Current Rating: See matrix below
- Voltage Rating: 600 VAC

ENVIRONMENTAL

- Operating Temperature: -40°C to +125°C

MECHANICAL

- Contact Material: Phosphor Bronze
- Contact Plating: Tin over Nickel
- Durability: 3 Cycles

HOW TO ORDER

00 — Prefix

9176 — Series

001 — Number of Ways (001 = 1)

60X — Contact Style

Code	Description	Accepted Wire Gauge	Wire Gauges
600	Capped IDC Connector PTH PCB Mount	18 AWG Stranded	ø1.6-2.1
601		20 AWG Solid and Stranded	ø1.6-2.1
602		22 AWG Solid and Stranded	ø1.1-1.6
603		24 AWG Solid and Stranded	ø1.1-1.6

9 — Color Option (9 = UL White)

X — Cap Options

Code	Cap Option	Description	Details
0	Through Wire	Allows wire to be terminated at any point	See page 47
9	Wire Stop	Terminates end of wire End protected by stop face	See page 48

6 — Plating Option (Tin Plated)

CURRENT RATING

18AWG	20AWG	22AWG	24AWG
9A	8A	6A	5A

Certification: UL File #E90723

RoHS COMPLIANT

The Important Information/Disclaimer is incorporated in the catalog where these specifications came from or available online at www.avx.com/disclaimer/ by reference and should be reviewed in full before placing any order.

SINGLE TINE PTH 18-24 AWG: 9176-600

1 Position - Through Wire

18-24 AWG 1 WAY PTH CONNECTOR THROUGH WIRE CAPPED

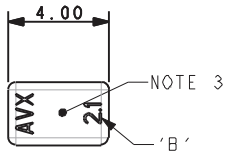

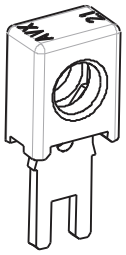

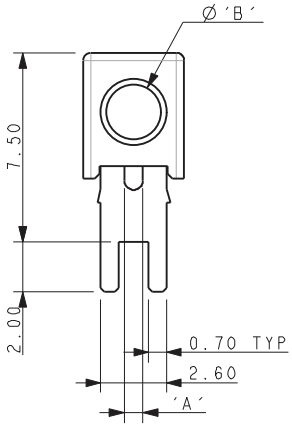

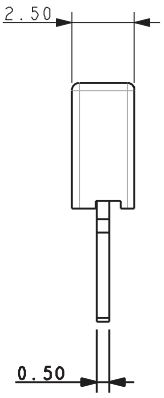

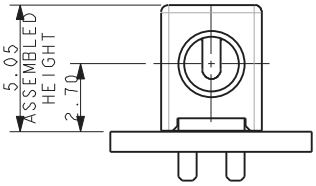

Code	Accepted Wire Gauge	A	Wire Insulation	B
600	18 AWG Stranded	0.74	Ø 1.6-2.1	2.1
601	20 AWG Solid or Stranded	0.60	Ø 1.6-2.1	2.1
602	22 AWG Solid or Stranded	0.47	Ø 1.1-1.6	1.6
603	24 AWG Solid or Stranded	0.37	Ø 1.1-1.6	1.6

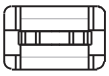

SUGGESTED PCB LAYOUT

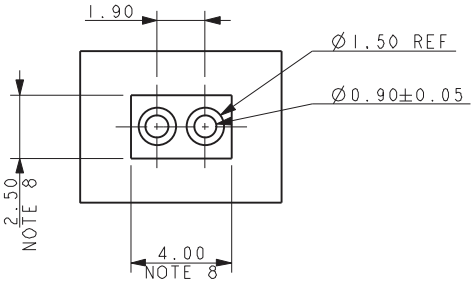

PACKING DETAILS

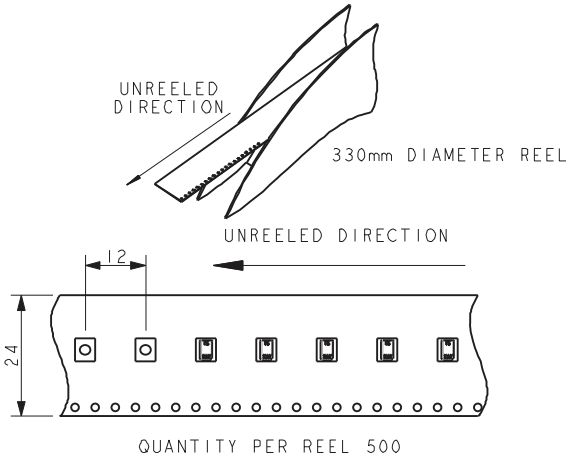

NOTES:

1. 1 WAY CONNECTOR FOR PTH WIRE TO BOARD CONNECTION, PRE-ASSEMBLED THROUGH WIRE CAP, CODE SEE PAGE 46.
2. CONTAT/CAP TO MATCH 20AWG-24AWG SOLID AND STRANDED WIRES, 18AWG WILL ONLY ACCEPT STRANDED WIRES, SEE TABLE.
3. FLAT FACE ON TOP OF CAP TO AID PICK AND PLACE ASSEMBLY, MAXIMUM DIAMETER 1.8MM.
4. FOR FULL PRODUCT SPECIFICATION ON STANDARD CONNECTORS REFER TO ELCO SPEC 201-01-163.
5. ASSEMBLY PROCEDURE, REFER TO APPLICATION NOTES 201-01-142.
6. GENERAL TOLERANCE ±0.20 UNLESS STATED.
7. PACKED IN TAPE AND REEL, QUANTITY PER REEL 500.
8. CONNECTOR OUTLINE.
9. CONTACT MATERIAL: TIN PLATED COPPER ALLOY.
10. INSULATION MATERIAL: HIGH TEMPERATURE NYLON, GLASS FILLED, UL94 V-O. COLOR REFER TO PAGE 46.

The Important Information/Disclaimer is incorporated in the catalog where these specifications came from or available online at www.avx.com/disclaimer/ by reference and should be reviewed in full before placing any order.

SINGLE TINE PTH 18-24 AWG: 9176-600

1 Position - Wire Stop

18-24 AWG 1 WAY PTH CONNECTOR
WIRE STOP CAPPED

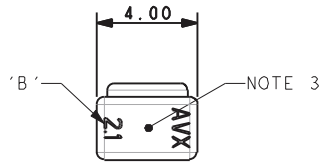

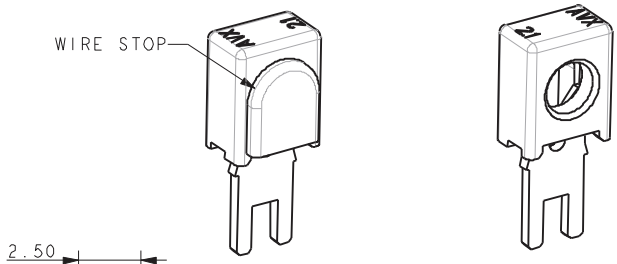

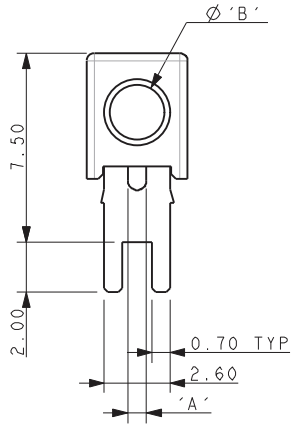

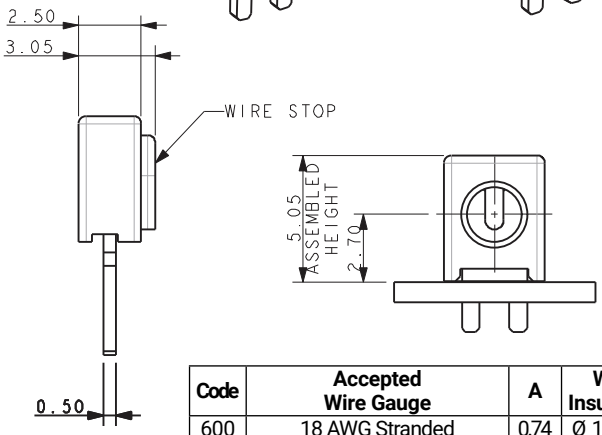

Code	Accepted Wire Gauge	A	Wire Insulation	B
600	18 AWG Stranded	0.74	Ø 1.6-2.1	2.1
601	20 AWG Solid or Stranded	0.60	Ø 1.6-2.1	2.1
602	22 AWG Solid or Stranded	0.47	Ø 1.1-1.6	1.6
603	24 AWG Solid or Stranded	0.37	Ø 1.1-1.6	1.6

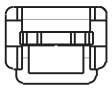

SUGGESTED PCB LAYOUT

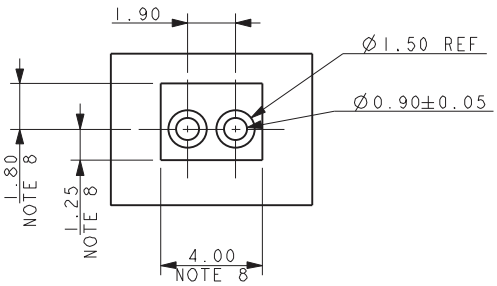

PACKING DETAILS

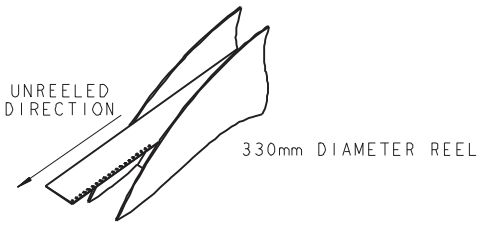

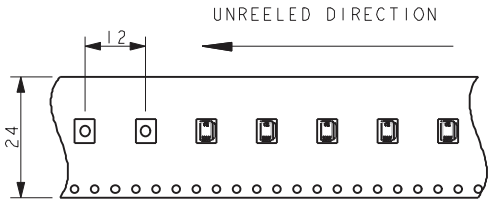

QUANTITY PER REEL 500

NOTES:

1. 1 WAY CONNECTOR FOR PTH WIRE TO BOARD CONNECTION, PRE-ASSEMBLED WIRE STOP CAP, CODE SEE PAGE 46.
2. CONTACT/CAP TO MATCH 20AWG-24AWG SOLID AND STRANDED WIRES, 18AWG WILL ONLY ACCEPT STRANDED WIRES, SEE TABLE.
3. FLAT FACE ON TOP OF CAP TO AID PICK AND PLACE ASSEMBLY, MAXIMUM DIAMETER 1.8MM.
4. FOR FULL PRODUCT SPECIFICATION ON STANDARD CONNECTORS REFER TO ELCO SPEC 201-01-163.
5. ASSEMBLY PROCEDURE, REFER TO APPLICATION NOTES 201-01-142.
6. GENERAL TOLERANCE ±0.20 UNLESS STATED.
7. PACKED IN TAPE AND REEL, QUANTITY PER REEL 500.
8. CONNECTOR OUTLINE.
9. CONTACT MATERIAL: TIN PLATED COPPER ALLOY.
10. INSULATION MATERIAL: HIGH TEMPERATURE NYLON, GLASS FILLED, UL94 V-O. COLOR REFER TO PAGE 46.
11. WIRE STOP CAP PROTECTS END OF WIRE.

The Important Information/Disclaimer is incorporated in the catalog where these specifications came from or available online at www.avx.com/disclaimer/ by reference and should be reviewed in full before placing any order.

18-24 AWG ASSEMBLED CAPPED PTH CONNECTORS

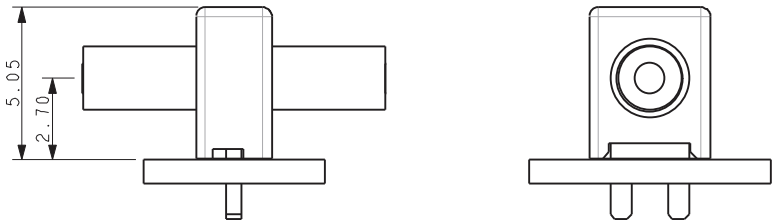

NOMINAL ASSEMBLED HEIGHTS

TYPICAL THROUGH WIRE ASSEMBLIES

TYPICAL WIRE STOP ASSEMBLIES

The Important Information/Disclaimer is incorporated in the catalog where these specifications came from or available online at www.avx.com/disclaimer/ by reference and should be reviewed in full before placing any order.

SINGLE TINE SMT 18-24 AWG: 9176-650

General Information

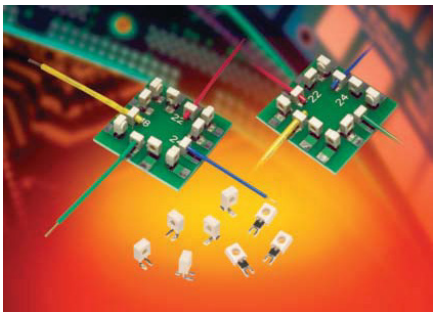

The market and applications for simple and reliable discrete Wire-to-Board (WTB) connectors continue to evolve. Developed for harsh industrial and automotive applications, Insulation Displacement Connectors (IDC) have been used in hundreds of applications connecting wires to PCB's from transportation wiring to every day LED lighting and smart meter/sensor connections. Size, performance and simplicity have been the key factors for selecting this connector when long term reliability is critical.

This single contact version of the proven 9176 family of connectors offers a lower cost solution to the market with only a 10% reduction in current rating. The SMT footprint is backward compatible with the standard dual contact configurations; offers all the same wire gauges and termination benefits of the integrated cap and provides a 10% height reduction.

APPLICATIONS

- Machine Controls: motors, drives, solenoids, sensors, fans and pumps
- Commercial Buildings: controls, security, fire and sensors
- Smart Grid: meters, breakers and panels
- SSL/LED: bulbs, fixtures, signage and streetlights
- Application notes: reference 201-01-142

FEATURES AND BENEFITS

- IDC contact provides a gas-tight connection to the PCB for long term reliability
- Plastic cap retains the contact in position prior to automatic placement, then acts as the assembly tool to terminate the wires; no special tooling.
- Tested to automotive levels on shock, vibration and temperature cycling for reliability
- Identical contact and footprint pattern to the existing 9176 for full backward compatibility and functionality
- The IDC contact reduces the total applied cost versus solder or crimp processes
- Connectors are available in two configurations for maximum flexibility: End and Through Wire

ELECTRICAL

- Current Rating: See matrix below
- Voltage Rating: 600 VAC

ENVIRONMENTAL

- Operating Temperature: -40°C to +125°C

MECHANICAL

- Contact Material: Phosphor Bronze
- Contact Plating: Tin over Nickel
- Durability: 3 Cycles

HOW TO ORDER

00 — Prefix

9176 — Series

001 — Number of Ways (001 = 1)

65X — Contact Style

Code	Description	Accepted Wire Gauge	Wire Gauges
650	Capped IDC Connector SMT Mount	18 AWG Stranded	ø1.6-2.1
651		20 AWG Solid and Stranded	ø1.6-2.1
652		22 AWG Solid and Stranded	ø1.1-1.6
653		24 AWG Solid and Stranded	ø1.1-1.6

9 — Color Option (9 = UL White)

X — Cap Options

Code	Cap Option	Description	Details
0	Through Wire	Allows wire to be terminated at any point	See page 51
9	Wire Stop	Terminates end of wire End protected by stop face	See page 52

6 — Plating Option (Tin Plated)

CURRENT RATING

18AWG	20AWG	22AWG	24AWG
9A	8A	6A	5A

Certification: UL File #E90723

RoHS COMPLIANT

18-24 AWG 1 WAY IDC CONNECTOR
THROUGH WIRE CAPPED

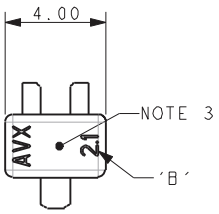

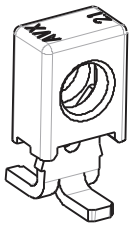

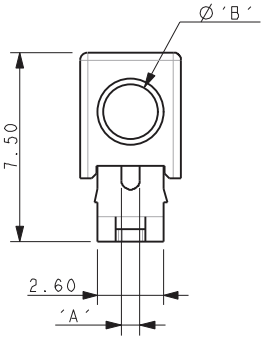

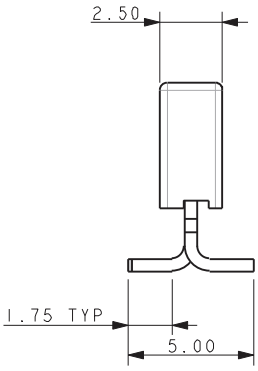

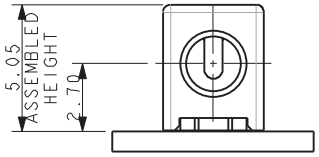

Code	Accepted Wire Gauge	A	Wire Insulation	B
600	18 AWG Stranded	0.74	Ø 1.6-2.1	2.1
601	20 AWG Solid or Stranded	0.60	Ø 1.6-2.1	2.1
602	22 AWG Solid or Stranded	0.47	Ø 1.1-1.6	1.6
603	24 AWG Solid or Stranded	0.37	Ø 1.1-1.6	1.6

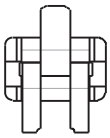

SUGGESTED PCB LAYOUT

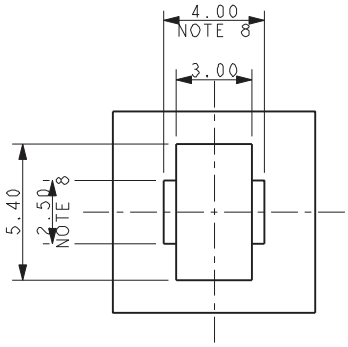

PACKING DETAILS

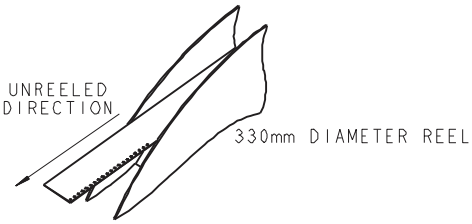

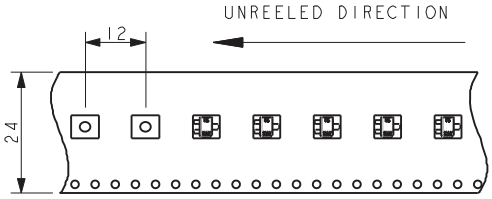

QUANTITY PER REEL 700

NOTES:
1. 1 WAY CONNECTOR FOR IDC WIRE TO BOARD CONNECTION, PRE-ASSEMBLED THROUGH WIRE CAP, CODE SEE PAGE 50.
2. CONTACT/CAP TO MATCH 20AWG-24AWG SOLID AND STRANDED WIRES, 18AWG WILL ONLY ACCEPT STRANDED WIRES, SEE TABLE.
3. FLAT FACE ON TOP OF CAP TO AID PICK AND PLACE ASSEMBLY, MAXIMUM DIAMETER 1.8MM.
4. FOR FULL PRODUCT SPECIFICATION ON STANDARD CONNECTORS REFER TO ELCO SPEC 201-01-163.
5. ASSEMBLY PROCEDURE, REFER TO APPLICATION NOTES 201-01-142.
6. GENERAL TOLERANCE ±0.20 UNLESS STATED.
7. PACKED IN TAPE AND REEL, QUANTITY PER REEL 700.
8. CONNECTOR OUTLINE.
9. CONTACT MATERIAL: TIN PLATED COPPER ALLOY.
10. INSULATION MATERIAL: HIGH TEMPERATURE NYLON, GLASS FILLED, UL94 V-O. COLOR REFER TO PAGE 50.

The Important Information/Disclaimer is incorporated in the catalog where these specifications came from or available online at www.avx.com/disclaimer/ by reference and should be reviewed in full before placing any order.

SINGLE TINE SMT 18-24 AWG: 9176-650

1 Position - Wire Stop

18-24 AWG 1 WAY IDC CONNECTOR
WIRE STOP CAPPED

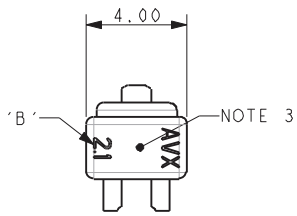

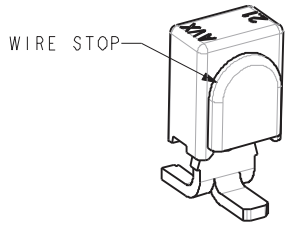

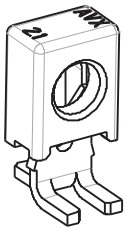

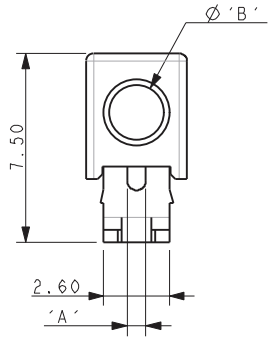

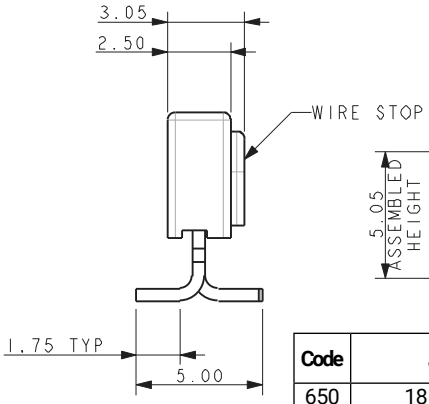

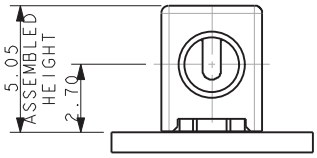

Code	Accepted Wire Gauge	A	Wire Insulation	B
650	18 AWG Stranded	0.74	Ø 1.6-2.1	2.1
651	20 AWG Solid or Stranded	0.60	Ø 1.6-2.1	2.1
652	22 AWG Solid or Stranded	0.47	Ø 1.1-1.6	1.6
653	24 AWG Solid or Stranded	0.37	Ø 1.1-1.6	1.6

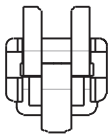

SUGGESTED PCB LAYOUT

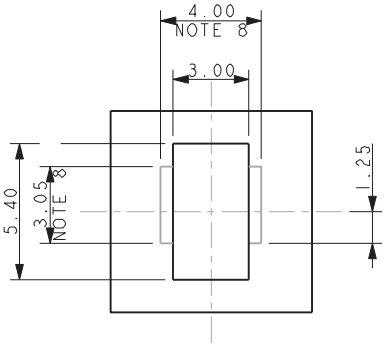

PACKING DETAILS

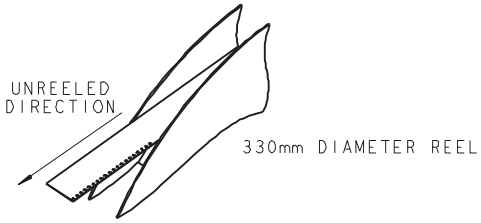

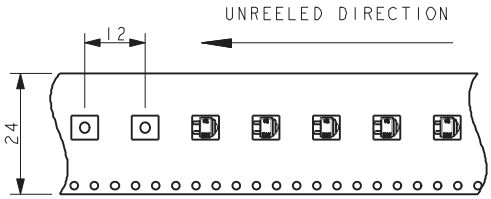

QUANTITY PER REEL 700

NOTES:
1. 1 WAY CONNECTOR FOR IDC WIRE TO BOARD CONNECTION, PRE-ASSEMBLED WIRE STOP CAP, CODE SEE PAGE 50.
2. CONTACT/CAP TO MATCH 20AWG-24AWG SOLID AND STRANDED WIRES, 18AWG WILL ONLY ACCEPT STRANDED WIRES, SEE TABLE.
3. FLAT FACE ON TOP OF CAP TO AID PICK AND PLACE ASSEMBLY, MAXIMUM DIAMETER 1.8MM.
4. FOR FULL PRODUCT SPECIFICATION ON STANDARD CONNECTORS REFER TO ELCO SPEC 201-01-163.
5. ASSEMBLY PROCEDURE, REFER TO APPLICATION NOTES 201-01-142.
6. GENERAL TOLERANCE ±0.20 UNLESS STATED.
7. PACKED IN TAPE AND REEL, QUANTITY PER REEL 700.
8. CONNECTOR OUTLINE.
9. CONTACT MATERIAL: TIN PLATED COPPER ALLOY.
10. INSULATION MATERIAL: HIGH TEMPERATURE NYLON, GLASS FILLED, UL94 V-O. COLOR REFER TO PAGE 50.
11. WIRE STOP CAP PROTECTS END OF WIRE.

The Important Information/Disclaimer is incorporated in the catalog where these specifications came from or available online at www.avx.com/disclaimer/ by reference and should be reviewed in full before placing any order.

18-24 AWG ASSEMBLED CAPPED IDC CONNECTORS

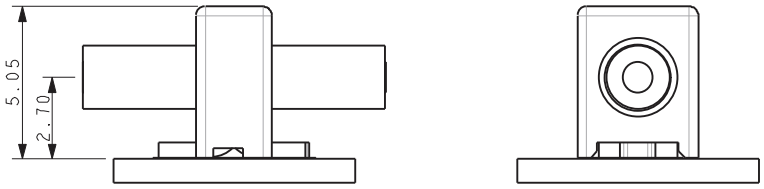

NOMINAL ASSEMBLED HEIGHTS

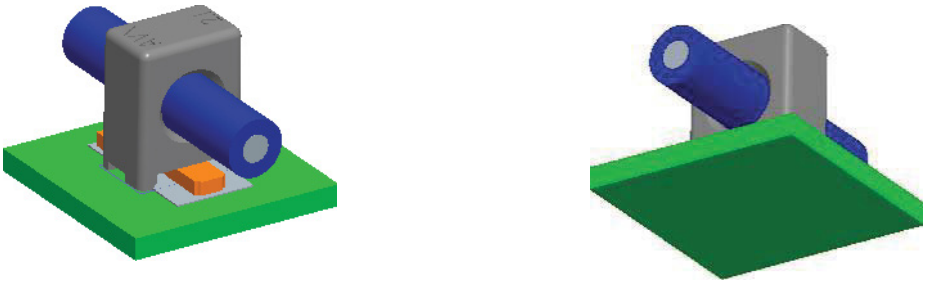

TYPICAL THROUGH WIRE ASSEMBLIES

TYPICAL WIRE STOP ASSEMBLIES

The Important Information/Disclaimer is incorporated in the catalog where these specifications came from or available online at www.avx.com/disclaimer/ by reference and should be reviewed in full before placing any order.

LOW PROFILE IDC 22-30 AWG: 9176-800

General Information

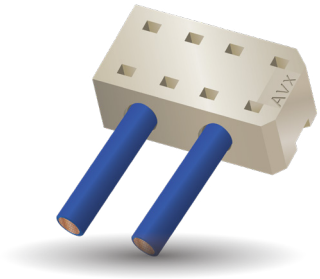

GENERAL DESCRIPTION

KYOCERA AVX industrial/transportation grade insulation displacement connectors (IDC) have been proven in the market for over ten years. Providing a very simple one-step termination process, these connectors proved a robust wire-to-board (WTB) termination in harsh applications.

The 9176-800 series has been developed specifically for 22-26AWG discrete wires in size critical applications. By reducing the "Z" axis height by 1.0mm and the overall volume by up to 50%, this new package size is an ideal choice in space constrained applications over previous IDC connectors. In addition, an expanded size range is available starting from a 1 position up to 4 positions in each wire gauge. The entire range provides new packaging solutions in industrial, medical and transportation applications such as smart metering, LED lighting, industrial controls and portable monitoring and measurement devices.

APPLICATIONS

- Connecting discrete wires and components to a PCB
- Bringing power and signals onto a PCB
- Daisy chaining or interconnecting PCB's together
- Application Notes: Refer to 201-01-216

FEATURES AND BENEFITS

- Redundant and fatigue resistant phosphor bronze material provides a gas tight, cold welded connection to the wire
- IDC connectors can be potted or over molded to encapsulate electronic modules and provide environmental protection
- The 1p version is available in industry standard colors to match individual wires for error free wire termination

ELECTRICAL

- Current Rating: 22AWG: 7 amps
  24AWG: 6 amps
  26AWG: 5 amps
  28AWG: 4 amps
  30AWG: 3 amps
- Voltage Rating: 1p: 600V
  2p-4p: 100V
- Durability: 1 Cycle

ENVIRONMENTAL

- Operating Temperature: -40°C to +125°C

MECHANICAL

- Insulator Material: Glass-Filled Nylon 46; UL94V0
- Contact Material: Phosphor Bronze
- Plating: Lead-Free Tin Over Nickel

HOW TO ORDER

00 — **Prefix**
Wire to Board Connector

9176 — **Series**

00X — **Number of Ways**
001 = 1
002 = 2
003 = 3
004 = 4

8XX — **Wire Gauge Size**

Code	Accepted Wire Guage	Maximum Wire Isulation Diameter	UL Approved
853	22AWG Solid and Stranded	1.40	Approved
863	24AWG Solid and Stranded	1.40	Approved
873	26AWG Solid and Stranded	1.40	Approved
883	28AWG Solid and Stranded	0.80 to 1.40	Approved
884	28AWG Solid and Stranded	0.80	Approved
893	30AWG Solid and Stranded	0.80 to 1.40	Approved
894	30AWG Solid and Stranded	0.80	Approved

X — **Insulator Color**
9 = White Standard
Solid Colors (1p only)
2 = Brown
3 = Blue
4 = Yellow
5 = Red
6 = Green
7 = Orange
8 = Black

06 — **Plating Option**
06 =Pure Tin
All Over Nickel

Certification: UL File #E90723

The Important Information/Disclaimer is incorporated in the catalog where these specifications came from or available online at www.avx.com/disclaimer/ by reference and should be reviewed in full before placing any order.

LOW PROFILE IDC 22-30 AWG: 9176-800

1 Position

00-9176-001-8XX-X06
1 WAY

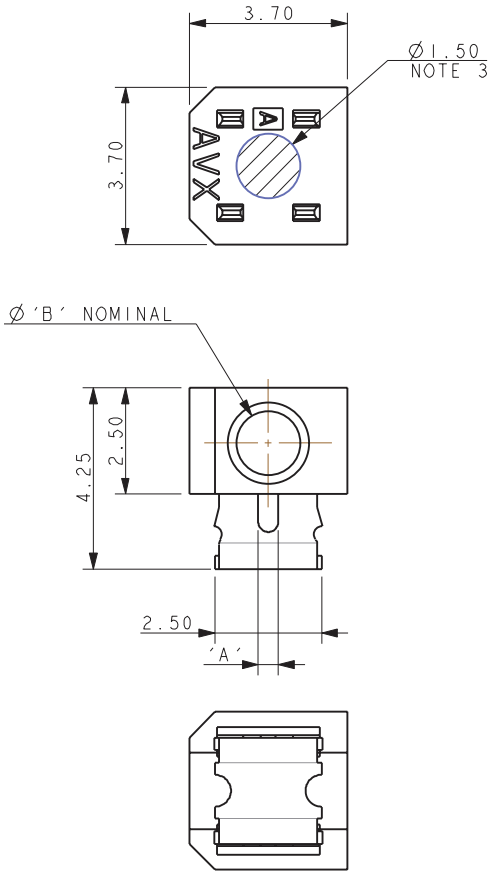

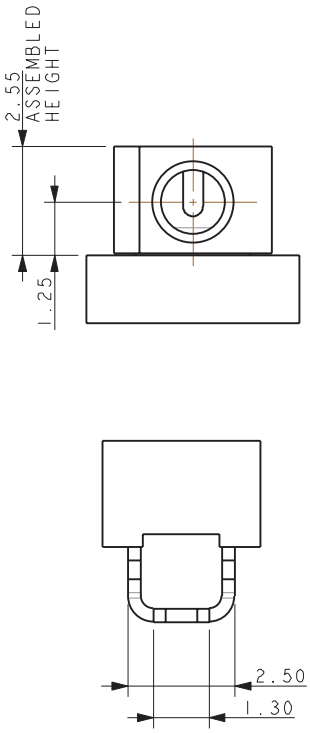

PART NUMBER See page 54	WIRE GAUGE	B	A
00-9176-001-853-X06	22AWG Solid and Stranded	1.50	0.47
00-9176-001-863-X06	24AWG Solid and Stranded	1.50	0.37
00-9176-001-873-X06	26AWG Solid and Stranded	1.50	0.28
00-9176-001-883-X06	28AWG Solid and Stranded	1.50	0.20
00-9176-001-884-X06	28AWG Solid and Stranded	0.90	0.20
00-9176-001-893-X06	30AWG Solid and Stranded	1.50	0.20
00-9176-001-894-X06	30AWG Solid and Stranded	0.90	0.20

NOTES:
1. 1 WAY CONNECTOR FOR IDC WIRE TO BOARD CONNECTOR.
2. CONTACT/CAP TO MATCH 22AWG TO 26AWG STRANDED AND SOLID WIRE, MAXIMUM INSULATOR 1.40 DIAMETER
3. FLAT FACE ON TOP OF CAP TO AID PICK AND PLACE ASSEMBLY.
4. FOR FULL PRODUCT SPECIFICATION REFER TO KYOCERA AVX SPEC 201-01-215.
5. ASSEMBLY PROCEDURE, REFER TO APPLICATION NOTES 201-01-216.
6. GENERAL TOLERANCE ±0.20 UNLESS STATED.
7. PACKED IN TAPE AND REEL, QUANTITY PER REEL 1700.
8. CONNECTOR OUTLINE.
9. CONTACT MATERIAL: TIN PLATED COPPER ALLOY.
10. INSULATOR MATERIAL: HIGH TEMPERATURE NYLON, GLASS FILLED. UL94 V-0, COLOR REFER TO PAGE 54.
11. UL REFERENCE E90723 (US AND CANADA).

SUGGESTED PCB LAYOUT

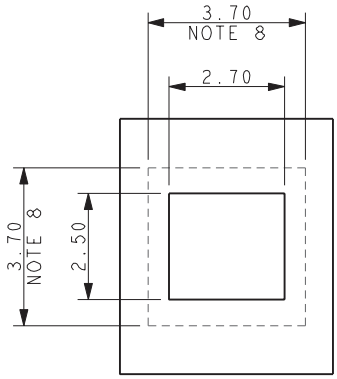

PACKING DETAILS

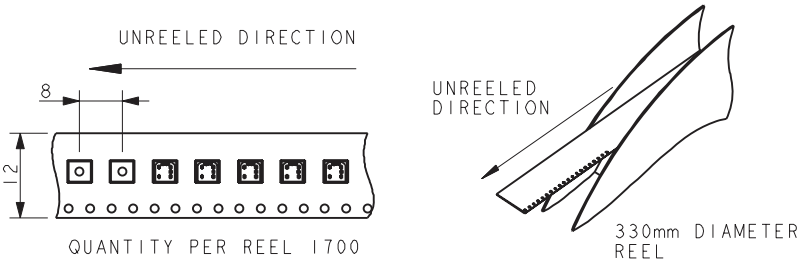

The Important Information/Disclaimer is incorporated in the catalog where these specifications came from or available online at www.avx.com/disclaimer/ by reference and should be reviewed in full before placing any order.

00-9176-001-8XX-X06

2 WAY

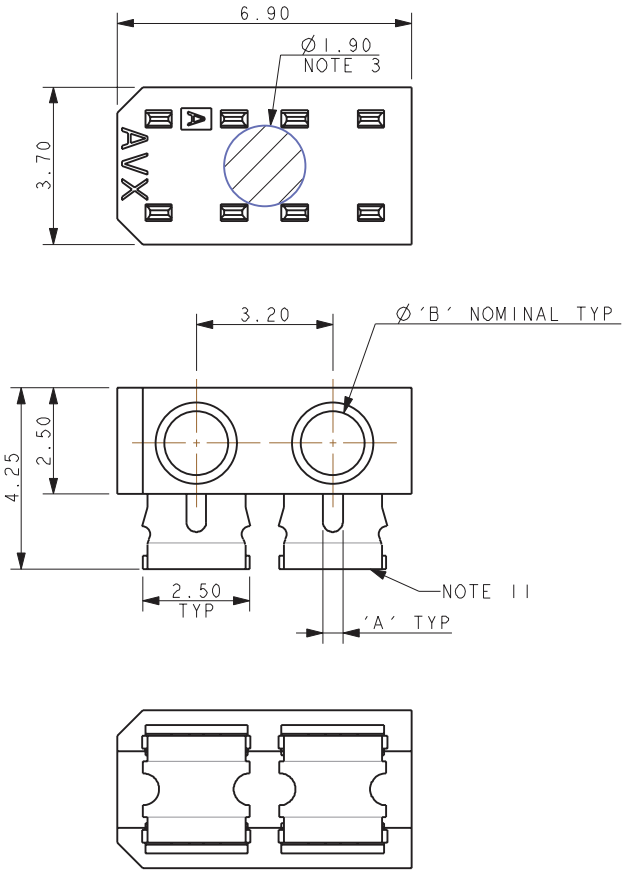

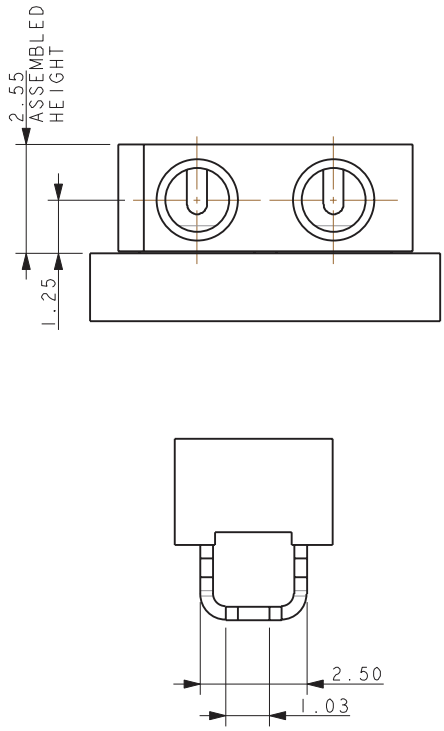

PART NUMBER See page 54	WIRE GAUGE	B	A
00-9176-002-853-X06	22AWG Solid and Stranded	1.50	0.47
00-9176-002-863-X06	24AWG Solid and Stranded	1.50	0.37
00-9176-002-873-X06	26AWG Solid and Stranded	1.50	0.28
00-9176-002-883-X06	28AWG Solid and Stranded	1.50	0.20
00-9176-002-884-X06	28AWG Solid and Stranded	0.90	0.20
00-9176-002-893-X06	30AWG Solid and Stranded	1.50	0.20
00-9176-002-894-X06	30AWG Solid and Stranded	0.90	0.20

NOTES:
1. 2 WAY CONNECTOR FOR IDC WIRE TO BOARD CONNECTOR.
2. CONTACT/CAP TO MATCH 22AWG TO 26AWG STRANDED AND SOLID WIRE, MAXIMUM INSULATOR 1.40 DIAMETER
3. FLAT FACE ON TOP OF CAP TO AID PICK AND PLACE ASSEMBLY.
4. FOR FULL PRODUCT SPECIFICATION REFER TO KYOCERA AVX SPEC 201-01-215.
5. ASSEMBLY PROCEDURE, REFER TO APPLICATION NOTES 201-01-216.
6. GENERAL TOLERANCE ±0.20 UNLESS STATED.
7. PACKED IN TAPE AND REEL, QUANTITY PER REEL 1700.
8. CONNECTOR OUTLINE.
9. CONTACT MATERIAL: TIN PLATED COPPER ALLOY.
10. INSULATOR MATERIAL: HIGH TEMPERATURE NYLON, GLASS FILLED. UL94 V-0, COLOR REFER TO PAGE 54.
11. UL REFERENCE E90723 (US AND CANADA).

SUGGESTED PCB LAYOUT

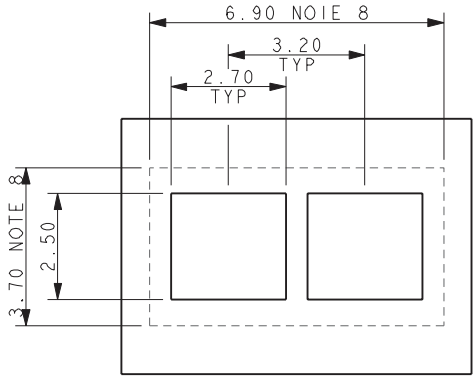

PACKING DETAILS

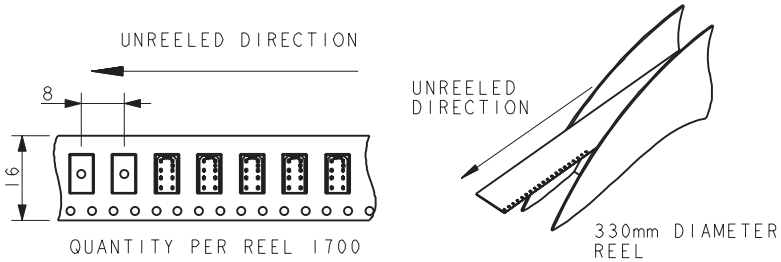

LOW PROFILE IDC 22-30 AWG: 9176-800

3 Position

00-9176-001-8XX-X06
3 WAY

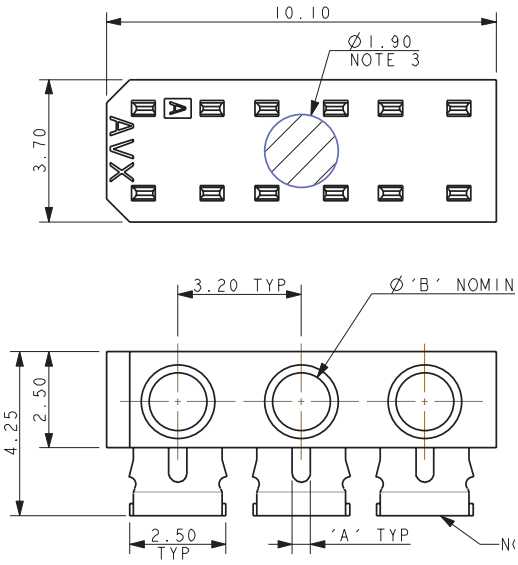

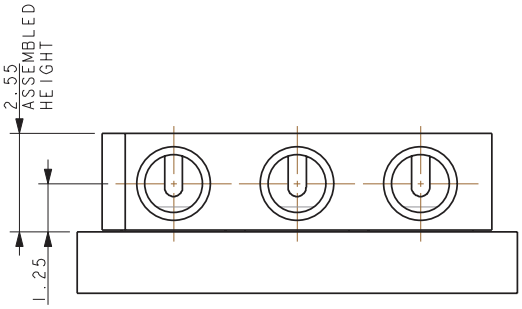

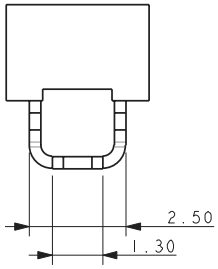

PART NUMBER See page 54	WIRE GAUGE	B	A
00-9176-003-853-X06	22AWG Solid and Stranded	1.50	0.47
00-9176-003-863-X06	24AWG Solid and Stranded	1.50	0.37
00-9176-003-873-X06	26AWG Solid and Stranded	1.50	0.28
00-9176-003-883-X06	28AWG Solid and Stranded	1.50	0.20
00-9176-003-884-X06	28AWG Solid and Stranded	0.90	0.20
00-9176-003-893-X06	30AWG Solid and Stranded	1.50	0.20
00-9176-003-894-X06	30AWG Solid and Stranded	0.90	0.20

NOTES:
1. 3 WAY CONNECTOR FOR IDC WIRE TO BOARD CONNECTOR.
2. CONTACT/CAP TO MATCH 22AWG TO 26AWG STRANDED AND SOLID WIRE, MAXIMUM INSULATOR 1.40 DIAMETER
3. FLAT FACE ON TOP OF CAP TO AID PICK AND PLACE ASSEMBLY.
4. FOR FULL PRODUCT SPECIFICATION REFER TO KYOCERA AVX SPEC 201-01-215.
5. ASSEMBLY PROCEDURE, REFER TO APPLICATION NOTES 201-01-216.
6. GENERAL TOLERANCE ±0.20 UNLESS STATED.
7. PACKED IN TAPE AND REEL, QUANTITY PER REEL 1700.
8. CONNECTOR OUTLINE.
9. CONTACT MATERIAL: TIN PLATED COPPER ALLOY.
10. INSULATOR MATERIAL: HIGH TEMPERATURE NYLON, GLASS FILLED. UL94 V-0, COLOR REFER TO PAGE 54.
11. UL REFERENCE E90723 (US AND CANADA).

SUGGESTED PCB LAYOUT

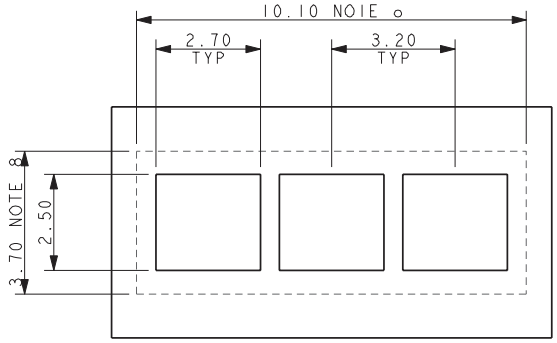

PACKING DETAILS

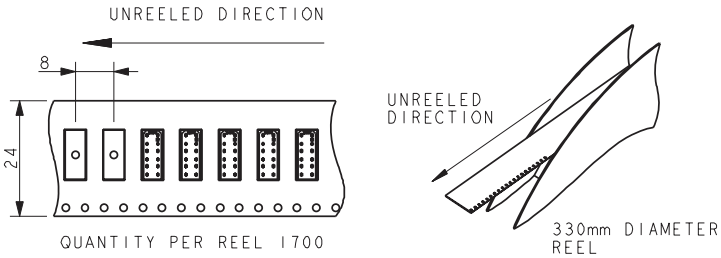

The Important Information/Disclaimer is incorporated in the catalog where these specifications came from or available online at www.avx.com/disclaimer/ by reference and should be reviewed in full before placing any order.

00-9176-001-8X3-X06
4 WAY

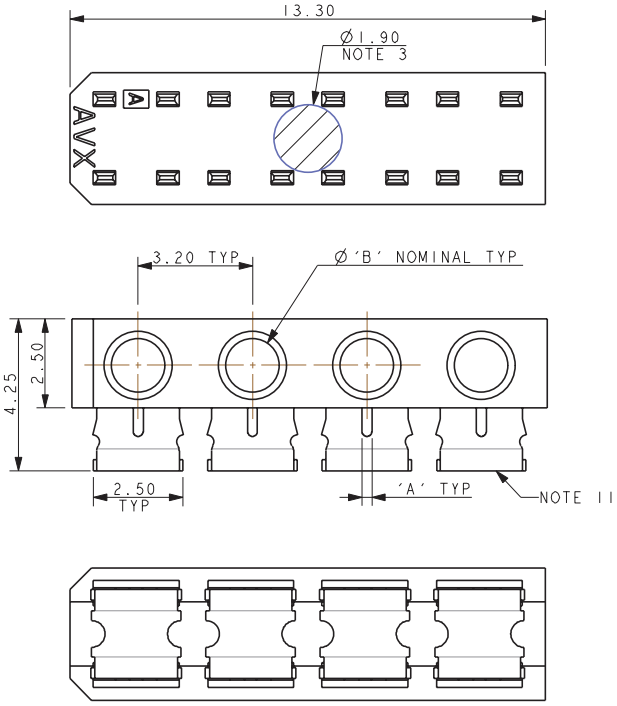

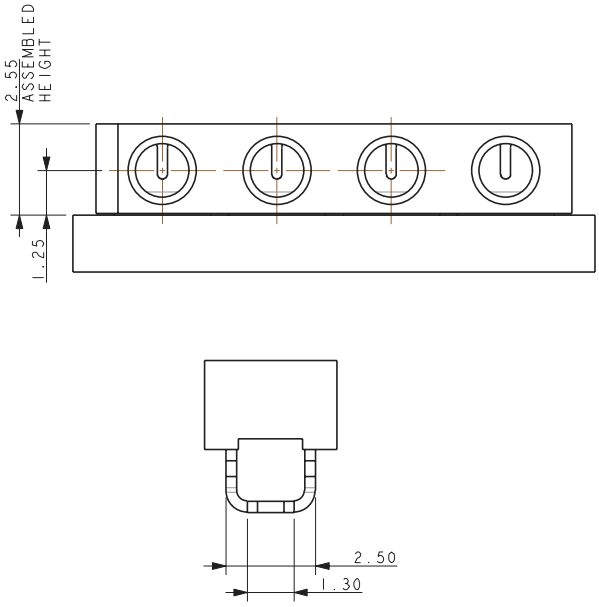

PART NUMBER See page 54	WIRE GAUGE	B	A
00-9176-004-853-X06	22AWG Solid and Stranded	1.50	0.47
00-9176-004-863-X06	24AWG Solid and Stranded	1.50	0.37
00-9176-004-873-X06	26AWG Solid and Stranded	1.50	0.28
00-9176-004-883-X06	28AWG Solid and Stranded	1.50	0.20
00-9176-004-884-X06	28AWG Solid and Stranded	0.90	0.20
00-9176-004-893-X06	30AWG Solid and Stranded	1.50	0.20
00-9176-004-894-X06	30AWG Solid and Stranded	0.90	0.20

NOTES:
1. 4 WAY CONNECTOR FOR IDC WIRE TO BOARD CONNECTOR.
2. CONTACT/CAP TO MATCH 22AWG TO 26AWG STRANDED AND SOLID WIRE, MAXIMUM INSULATOR 1.40 DIAMETER
3. FLAT FACE ON TOP OF CAP TO AID PICK AND PLACE ASSEMBLY.
4. FOR FULL PRODUCT SPECIFICATION REFER TO KYOCERA AVX SPEC 201-01-215.
5. ASSEMBLY PROCEDURE, REFER TO APPLICATION NOTES 201-01-216.
6. GENERAL TOLERANCE ±0.20 UNLESS STATED.
7. PACKED IN TAPE AND REEL, QUANTITY PER REEL 1700.
8. CONNECTOR OUTLINE.
9. CONTACT MATERIAL: TIN PLATED COPPER ALLOY.
10. INSULATOR MATERIAL: HIGH TEMPERATURE NYLON, GLASS FILLED. UL94 V-0, COLOR REFER TO PAGE 54.
11. UL REFERENCE E90723 (US AND CANADA).

SUGGESTED PCB LAYOUT

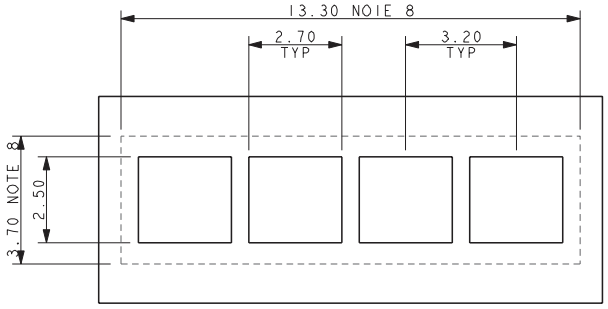

PACKING DETAILS

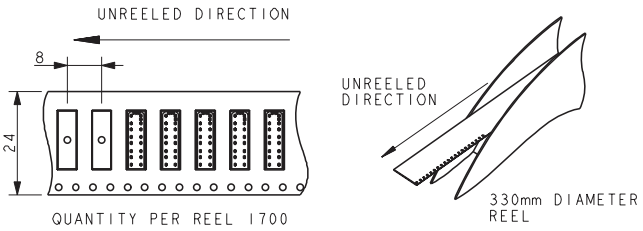

CONNECTOR DETAILS

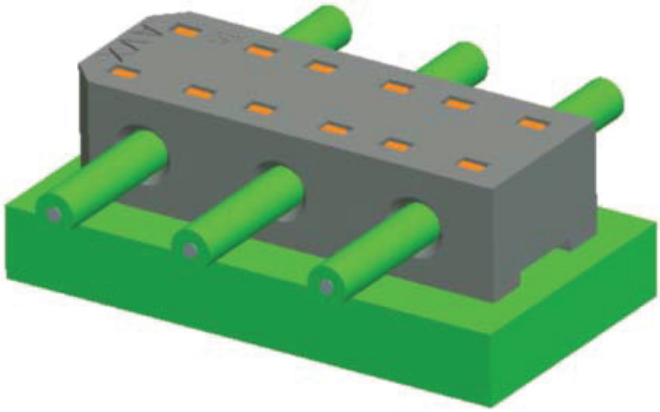

00-9176-00X-8X4-X06

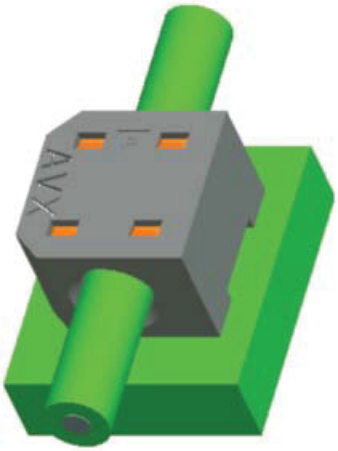

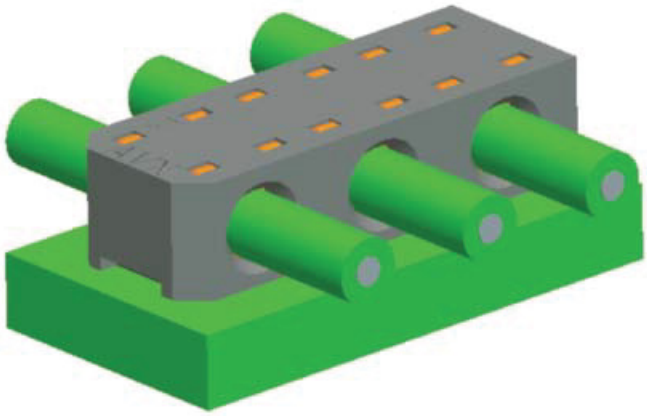

00-9176-00X-8X3-X06

The Important Information/Disclaimer is incorporated in the catalog where these specifications came from or available online at www.avx.com/disclaimer/ by reference and should be reviewed in full before placing any order.

090721

STANDARD 14-20 AWG: 00-9177

General Information

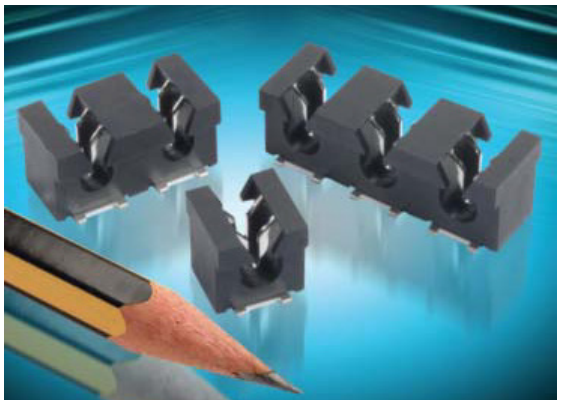

The 917X series of surface mount Insulation Displacement Connectors (IDC) were developed to meet the harsh automotive and industrial market applications for connecting individual wires directly to a PCB ranging from 14 AWG to 28 AWG. This industry proven contact system has been tested to automotive levels of shock, vibration, and temperature cycling to prove their reliability and robustness. The simplicity of inserting a wire into the connector with a small tool allows a wide range of devices to be connected to the PCB without soldering. In SSL applications specifically, these connectors are used to bring power and signal onto the PCB or are used to daisy chain multiple boards together in a long string. While the IDC contact provides a gas-tight connection to conductor of the wire, the housing has been designed to grab the insulation of the wire to provide a positive strain relief even in the harshest conditions. In case of repair, the wires can be removed and replace up to three times.

The 9177 series accepts 14 AWG to 20 AWG wires with an insulation diameter ranging from 2.75mm to 4.25mm. These dual contact connectors support a 15 amp current rating with two large SMT solder tails per wire to provide maximum stability on the PCB. Available in 1p-3p configuration, these connectors can be end stackable for higher pin counts.

APPLICATIONS

- Connecting discrete wire components directly to the PCB
- Bringing power and signals onto a PCB
- Daisy chaining PCB's together to create a continuous string of boards
- Application Notes: refer to 201-01-124

FEATURES AND BENEFITS

- IDC contact provides a gas-tight connection to the PCB for long term reliability
- Connector housing captures the wire insulation for positive strain relief
- Tested to automotive levels on shock, vibration and temperature cycling for reliability
- Low and high volume assembly tools to match production volumes
- Reduced total applied cost versus solder or crimp processes
- High temperature insulator capable to 260°C reflow soldering processes

ELECTRICAL

- Current Rating: 15 Amp / Contact
- Voltage Rating: 600 VAC

ENVIRONMENTAL

- Operating Temperature: -40°C to +125°C

MECHANICAL

- Insulator Material: Nylon 46: UL94V0
- Contact Material: Phosphor Bronze
- Plating: Tin over Nickel
- Durability: 3 Cycles

HOW TO ORDER

00 — Prefix

9177 — Series

00X — Number of Ways

Code	No of Ways	Details
001	1	Page 62
002	2	Page 63
003	3	Page 64

0XX — Wire Gauge Size

Code	Accepted Wire Gauge	Wire Insulation
001	14 AWG Solid or Stranded	Ø 4.25
012	16 AWG Solid or Stranded	Ø 3.50
022	18 AWG Solid or Stranded	Ø 3.50
033	20 AWG Solid or Stranded	Ø 2.75

X — Color/Approval

Code	Color	Approval
0	Black	Special Order - NON-UL
1	White	Special Order - NON-UL
8	Black	Special Order - UL APPROVED
9	White	Standard - UL APPROVED

06 — Plating Option

06 = Pure Tin all Over

RoHS COMPLIANT

HOW TO ORDER – CAP OPTIONS – THROUGH WIRE

00 — Prefix
60 = Cap

9177 — Series

00X — Number of Ways

Code	No of Ways
001	1
002	2
003	3

0XX — Wire Gauge Size

Code	Wire Insulator Diameter (Note 3)	A	B
027	2.10mm - 2.75mm	Ø2.75	2.00
035	2.75mm - 3.50mm	Ø3.50	2.65
042	3.50mm - 4.25mm	Ø4.25	3.40

X00 — Insulator Color

Code	Color
000	Black
100	White

HOW TO ORDER – CAP OPTIONS – WIRE STOP

60 — Prefix
60 = Cap

9177 — Series

00X — Number of Ways

Code	No of Ways
001	1
002	2
003	3

0XX — Wire Gauge Size

Code	Wire Insulator Diameter (Note 3)	A	B
027	2.10mm - 2.75mm	Ø2.75	2.00
035	2.75mm - 3.50mm	Ø3.50	2.65
042	3.50mm - 4.25mm	Ø4.25	3.40

X00 — Insulator Color

Code	Color
099	Black
199	White

Certification:
UL File # E320991,
check UL conditions of use for specific ratings and details

The Important Information/Disclaimer is incorporated in the catalog where these specifications came from or available online at www.avx.com/disclaimer/ by reference and should be reviewed in full before placing any order.

CONNECTOR/TOOLING PART NUMBER MATRIX

SERIES 9177 IDC					HAND INSERTION TOOLING*		ACCESSORY CAPS	
AWG	Wire Insulation	Positions	Color	Part Number	Plastic (low volume)	Metal (high volume)	Through Wire	Wire Stop
14	Ø 4.25	1p	White	009177001001106	069177701601001	069177701701001	609177001042100	609177001042199
14	Ø 4.25	1p	Black	009177001001006	069177701601001	069177701701001	609177001042000	609177001042099
14	Ø 4.25	2p	White	009177002001106	069177701601002	069177701701002	609177002042100	609177002042199
14	Ø 4.25	2p	Black	009177002001006	069177701601002	069177701701002	609177002042000	609177002042099
14	Ø 4.25	3p	White	009177003001106	069177701601003	069177701701003	609177003042100	609177003042199
14	Ø 4.25	3p	Black	009177003001006	069177701601003	069177701701003	609177003042000	609177003042099
16	Ø 3.50	1p	White	009177001012106	069177701602001	069177701702001	609177001035100	609177001035199
16	Ø 3.50	1p	Black	009177001012006	069177701602001	069177701702001	609177001035000	609177001035099
16	Ø 3.50	2p	White	009177002012106	069177701602002	069177701702002	609177002035100	609177002035199
16	Ø 3.50	2p	Black	009177002012006	069177701602002	069177701702002	609177002035000	609177002035099
16	Ø 3.50	3p	White	009177003012106	069177701602003	069177701702003	609177003035100	609177003035199
16	Ø 3.50	3p	Black	009177003012006	069177701602003	069177701702003	609177003035000	609177003035099
18	Ø 3.50	1p	White	009177001022106	069177701602001	069177701702001	609177001035100	609177001035199
18	Ø 3.50	1p	Black	009177001022006	069177701602001	069177701702001	609177001035000	609177001035099
18	Ø 3.50	2p	White	009177002022106	069177701602002	069177701702002	609177002035100	609177002035199
18	Ø 3.50	2p	Black	009177002022006	069177701602002	069177701702002	609177002035000	609177002035099
18	Ø 3.50	3p	White	009177003022106	069177701602003	069177701702003	609177003035100	609177003035199
18	Ø 3.50	3p	Black	009177003022006	069177701602003	069177701702003	609177003035000	609177003035099
20	Ø 2.75	1p	White	009177001033106	069177701603001	069177701703001	609177001027100	609177001027199
20	Ø 2.75	1p	Black	009177001033006	069177701603001	069177701703001	609177001027000	609177001027099
20	Ø 2.75	2p	White	009177002033106	069177701603002	069177701703002	609177002027100	609177002027199
20	Ø 2.75	2p	Black	009177002033006	069177701603002	069177701703002	609177002027000	609177002027099
20	Ø 2.75	3p	White	009177003033106	069177701603003	069177701703003	609177003027100	609177003027199
20	Ø 2.75	3p	Black	009177003033006	069177701603003	069177701703003	609177003027000	609177003027099
* Insertion Tooling - Requires Hand Press with Flat Rock Plates; Consult Application Notes 201-01-124								

The Important Information/Disclaimer is incorporated in the catalog where these specifications came from or available online at www.avx.com/disclaimer/ by reference and should be reviewed in full before placing any order.

STANDARD 14-20 AWG: 00-9177

1 Position

14-20 AWG 1 WAY IDC CONNECTOR

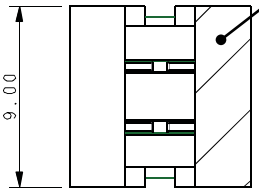

Pick and place area 2.375 x 9.00mm MIN

NOTES:
1. CONNECTOR FOR IDC WIRE TO BOARD CONNECTION.
2. CONTACT MATERIAL: PHOSPHOR BRONZE. INSULATION MATERIAL: HIGH TEMP NYLON 46, COLOUR REFER TO SHEET 1.
3. CONNECTOR DESIGNED TO ACCEPT BETWEEN 14AWG AND 20AWG SOLID AND STRANDED WIRE.
4. ALL DIMENSIONS ±0.20 UNLESS TOLERANCED
5. FOR FULL PRODUCT SPECIFICATION ON STANDARD CONNECTORS REFER TO ELCO SPEC 201-01-109, UL COMPONENTS REFER TO ELCO SPEC 201-01-109UL.
6. APPLICATION NOTES 201-01-124
7. FOR UL PRODUCT CODES UL REFERENCE E320991.
8. FOR PCB SPACE RESTRICTED BY ASSEMBLY TOOLING REFER TO SHEET 6

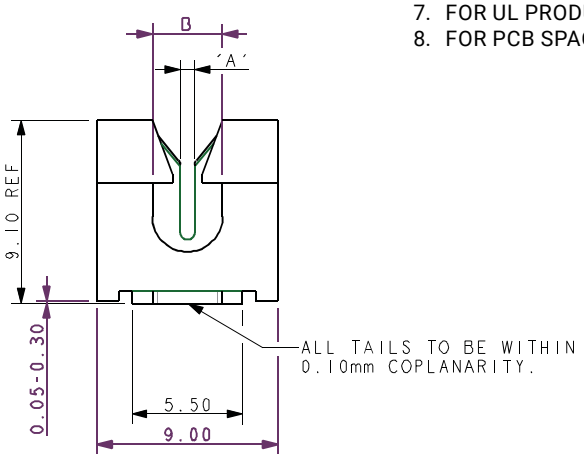

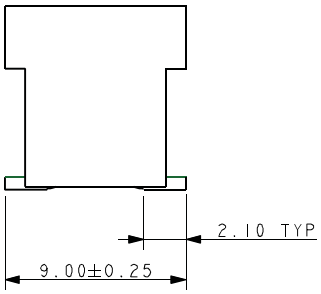

Code	Accepted Wire Gauge	A	Wire Insulation	B
001	14 AWG Solid or Stranded	1.10	Ø4.25 max	4.25
012	16 AWG Solid or Stranded	0.82	Ø3.50 max	3.50
022	18 AWG Solid or Stranded	0.72	Ø3.50 max	3.50
033	20 AWG Solid or Stranded	0.60	Ø2.75 max	2.75

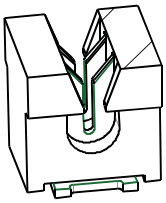

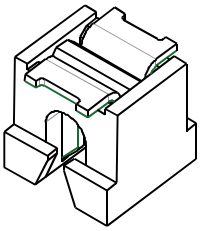

SMT PCB LAYOUT

PURE TIN PADS

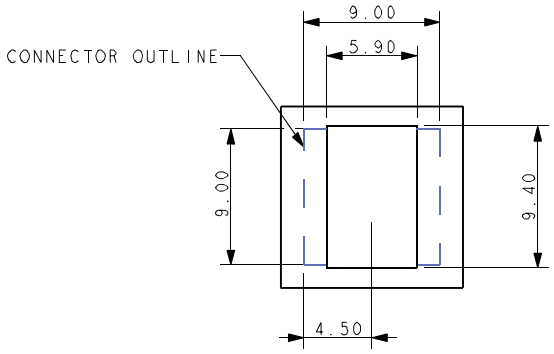

PACKING DETAILS

REEL QTY	400
LEADER	500MM
TRAILER	400MM
REEL/BOX	4
PACK QTY	1600

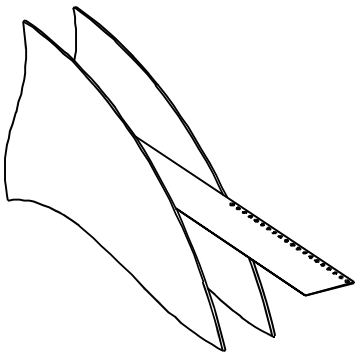

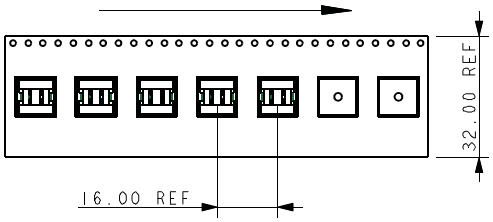

The Important Information/Disclaimer is incorporated in the catalog where these specifications came from or available online at www.avx.com/disclaimer/ by reference and should be reviewed in full before placing any order.

STANDARD 14-20 AWG: 00-9177

2 Position

14-20 AWG 2 WAY IDC CONNECTOR

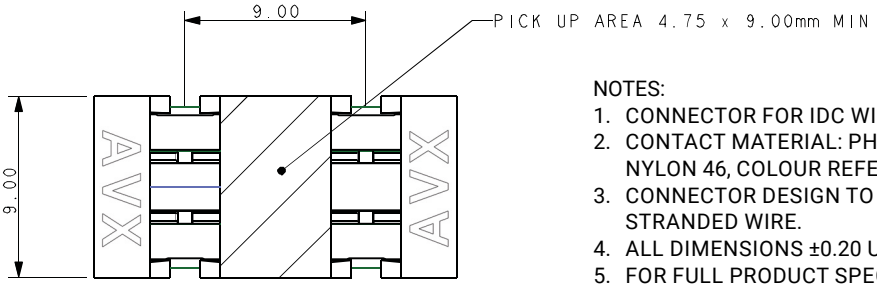

NOTES:
1. CONNECTOR FOR IDC WIRE TO BOARD CONNECTION.
2. CONTACT MATERIAL: PHOSPHOR BRONZE. INSULATION MATERIAL: HIGH TEMP NYLON 46, COLOUR REFER TO SHEET 1.
3. CONNECTOR DESIGN TO ACCEPT BETWEEN 14AWG AND 20AWG SOLID AND STRANDED WIRE.
4. ALL DIMENSIONS ±0.20 UNLESS TOLLERANCED.
5. FOR FULL PRODUCT SPECIFICATION ON STANDARD CONNECTORS REFER TO ELCO SPEC 201-01-109, UL COMPONENTS REFER TO ELCO SPEC 201-01-109UL.
6. APPLICATION NTOES 201-01-124.
7. FOR UL PRODUCT CODES UL REFERENCE E320991
8. FOR PCB SPACE RESTRICTED BY ASSEMBLY TOOLING REFER TO SHEET 6

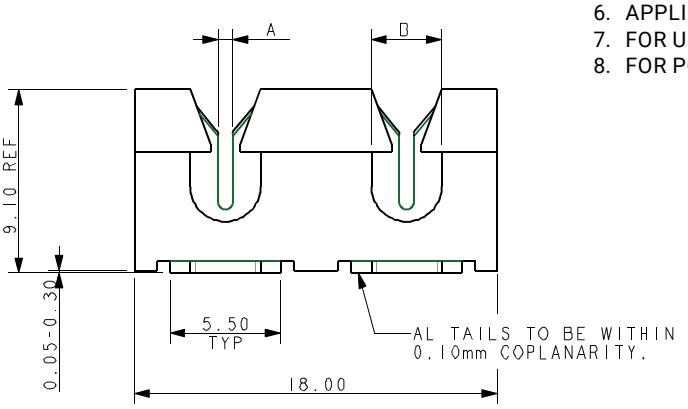

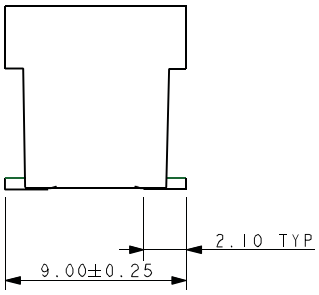

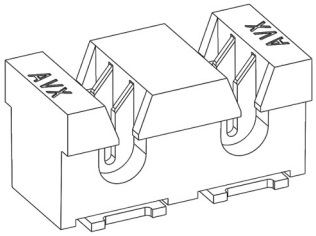

Code	Accepted Wire Gauge	A	Wire Insulation	B
001	14 AWG Solid or Stranded	1.10	Ø 4.25 max	4.25
012	16 AWG Solid or Stranded	0.82	Ø 3.50 max	3.50
022	18 AWG Solid or Stranded	0.72	Ø 3.50 max	3.50
033	20 AWG Solid or Stranded	0.60	Ø 2.75 max	2.75

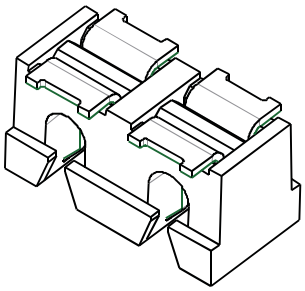

SMT PCB LAYOUT

PURE TIN PADS

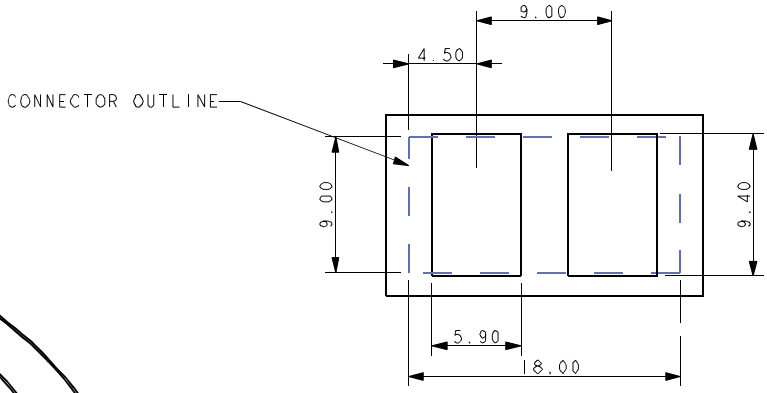

PACKING DETAILS

REEL QTY	400
LEADER	500mm
TRAILER	400mm
REEL DIAMETER	330mm

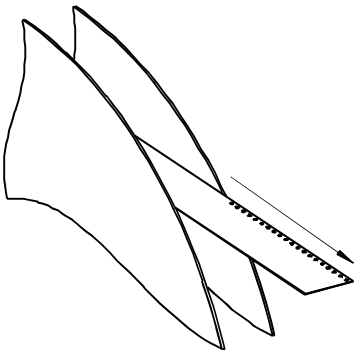

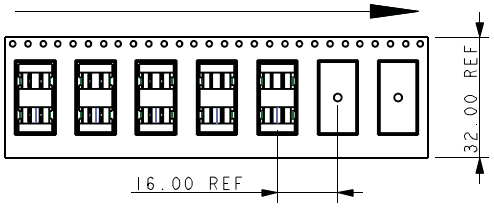

The Important Information/Disclaimer is incorporated in the catalog where these specifications came from or available online at www.avx.com/disclaimer/ by reference and should be reviewed in full before placing any order.

STANDARD 14-20 AWG: 00-9177

3 Position

14-20 AWG 3 WAY IDC CONNECTOR

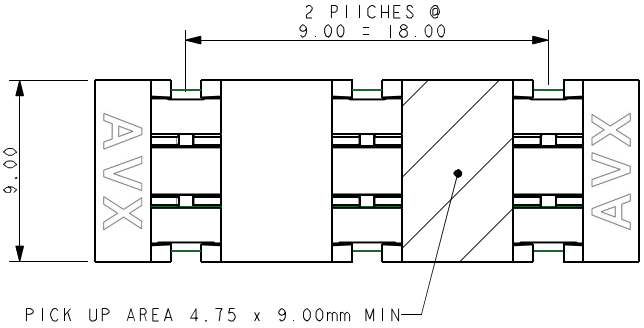

NOTES:
1. CONNECTOR FOR IDC WIRE TO BOARD CONNECTION.
2. CONTACT MATERIAL: PHOSPHOR BRONZE.
   INSULATION MATERIAL: HIGH TEMP NYLON 46, COLOUR REFER TO SHEET 1
3. CONNECTOR DESIGNED TO ACCEPT BETWEEN 14AWG AND 20AWG SOLID AND STRANDED WIRE.
4. ALL DIMENSIONS ±0.20 UNLESS TOLERANCED.
5. FOR FULL PRODUCT SPECIFICATION ON STANDARD CONNECTORS REFER TO ELCO SPEC 201-01-109, UL COMPONENTS REFER TO ELCO SPEC 201-01-109UL.
6. APPLICATION NOTES 201-01-124.
7. FOR UL PRODUCT CODES UL REFERENCE E320991.
8. FOR PCO SPACE RESTICTED BY ASSEMBLY TOOLING REFER TO SHEET 6

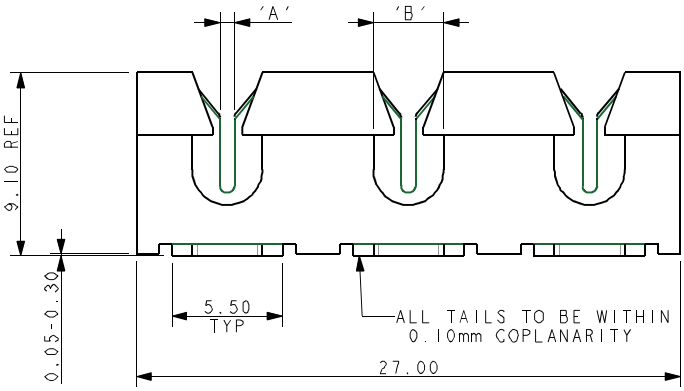

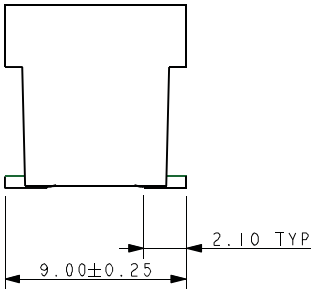

Code	Accepted Wire Gauge	A	Wire Insulation	B
001	14 AWG Solid or Stranded	1.10	Ø4.25 max	4.25
012	16 AWG Solid or Stranded	0.82	Ø3.50 max	3.50
022	18 AWG Solid or Stranded	0.72	Ø3.50 max	3.50
033	20 AWG Solid or Stranded	0.60	Ø2.75 max	2.75

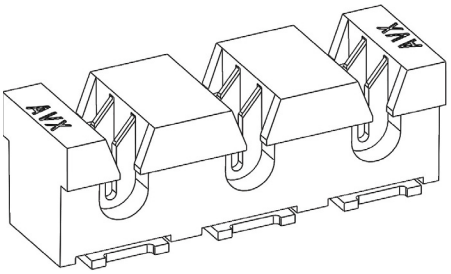

SMT PCB LAYOUT

PURE TIN PADS

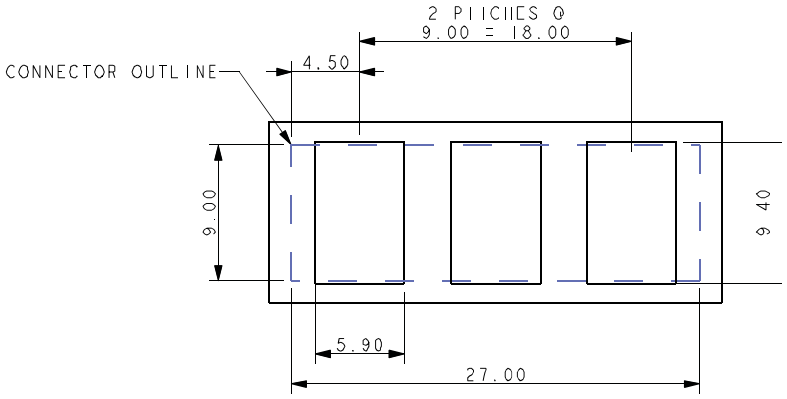

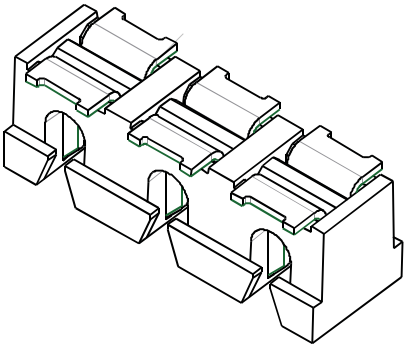

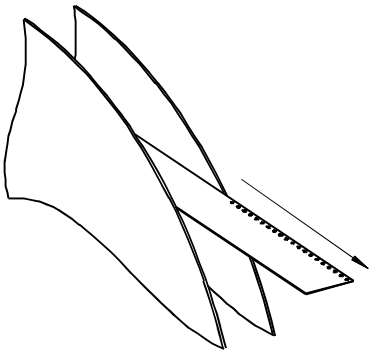

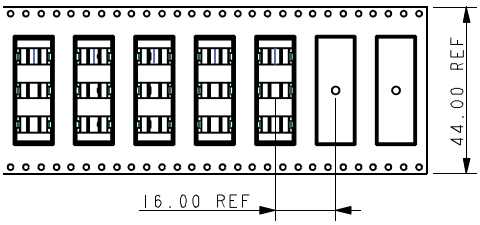

PACKING DETAILS

REEL QTY	400
LEADER	500mm
TRAILER	400mm
REEL DIAMETER	330mm

The Important Information/Disclaimer is incorporated in the catalog where these specifications came from or available online at www.avx.com/disclaimer/ by reference and should be reviewed in full before placing any order.

STANDARD 14-20 AWG: 00-9177

Assessory Cap - Through Wire

ACCESSORY CAP – THROUGH WIRE

RoHS COMPLIANT

HOW TO ORDER

60 9177 00X 0XX X00

Code	No of Ways
001	1
002	2
003	3

Code	Wire Insulation Diameter (Note 3)	"A"	"B"
027	2.10mm - 2.75mm	ø 2.75	2.00
035	2.75mm - 3.50mm	ø 3.50	2.65
042	3.50mm - 4.25mm	ø 4.25	3.40

Code	COLOUR
000	Black
100	White

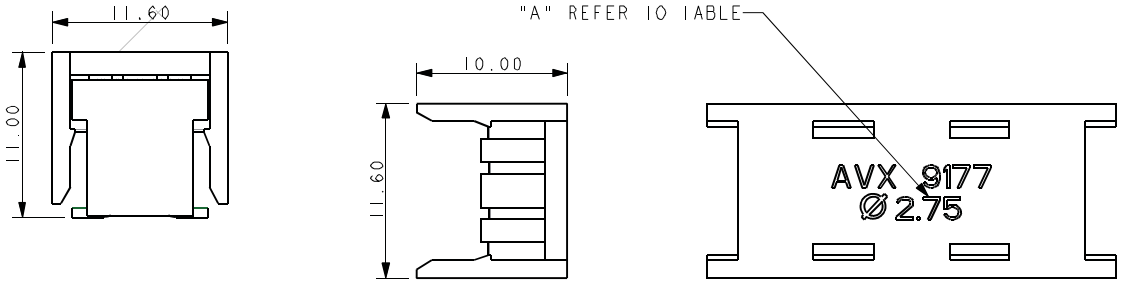

ASSEMBLED DIMENSIONS

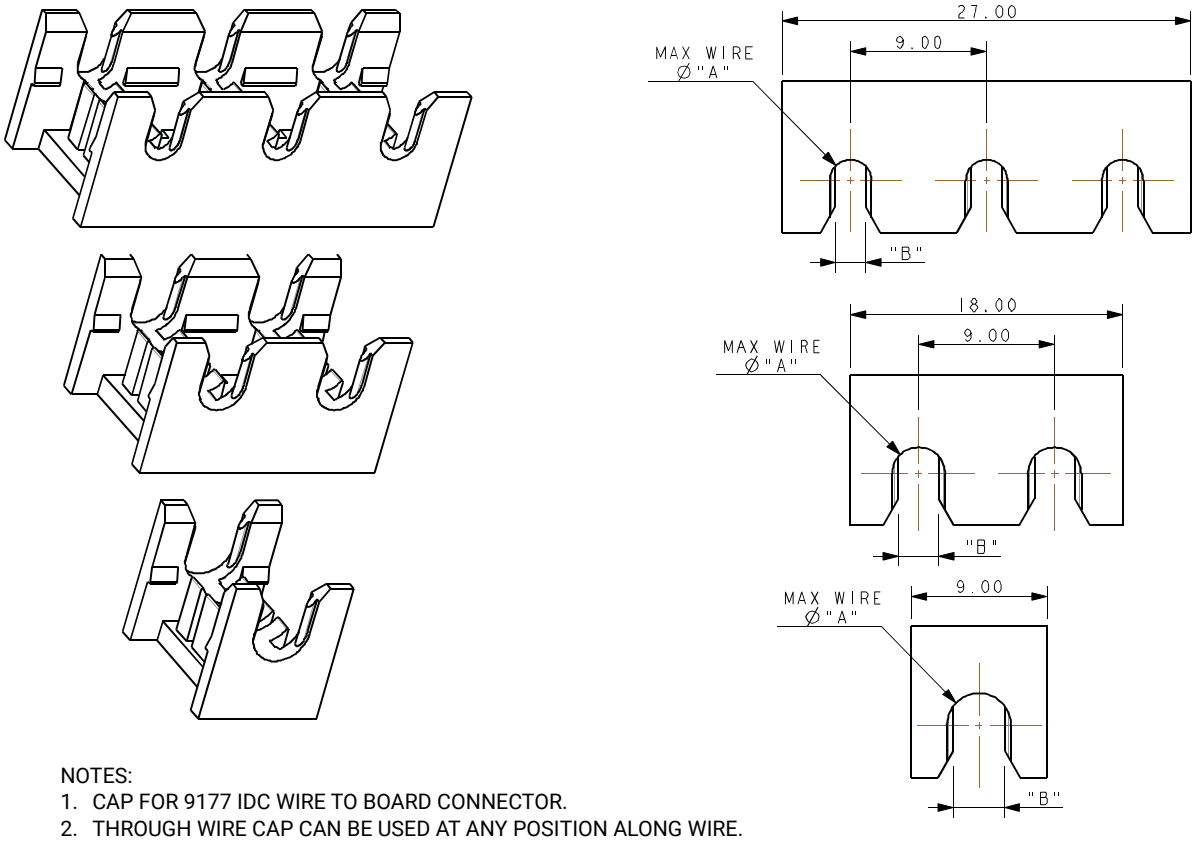

NOTES:
1. CAP FOR 9177 IDC WIRE TO BOARD CONNECTOR.
2. THROUGH WIRE CAP CAN BE USED AT ANY POSITION ALONG WIRE.
3. REFERS TO CAP, FOR WIRE MATCH TO CONNECTOR REFER TO TABLE ON SHEET
4. MATERIAL: GLASS FILLED NYLON 46, FOR COLOUR REFER TO TABLE
5. CAPS DESIGNED TO ACCOODATE INSULATION DIAMETERS REFER TO TABLE.
6. GENERAL TOLERANCE ±0.20mm.
7. PACKED IN BAGS, 400 PIECES PER BAG
8. APPLICATION NOTES REFER TO ELCO SPECIFICATION 201-01-124

The Important Information/Disclaimer is incorporated in the catalog where these specifications came from or available online at www.avx.com/disclaimer/ by reference and should be reviewed in full before placing any order.

STANDARD 14-20 AWG: 00-9177

Assessory Cap - Wire Stop

ACCESSORY CAP – WIRE STOP

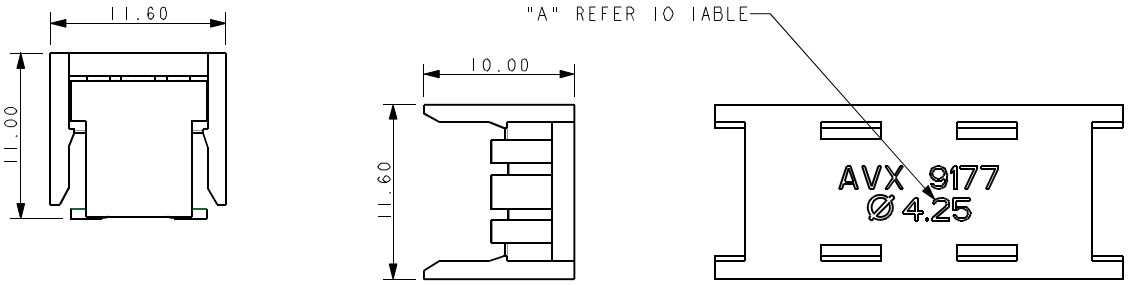

ASSEMBLED DIMENSIONS

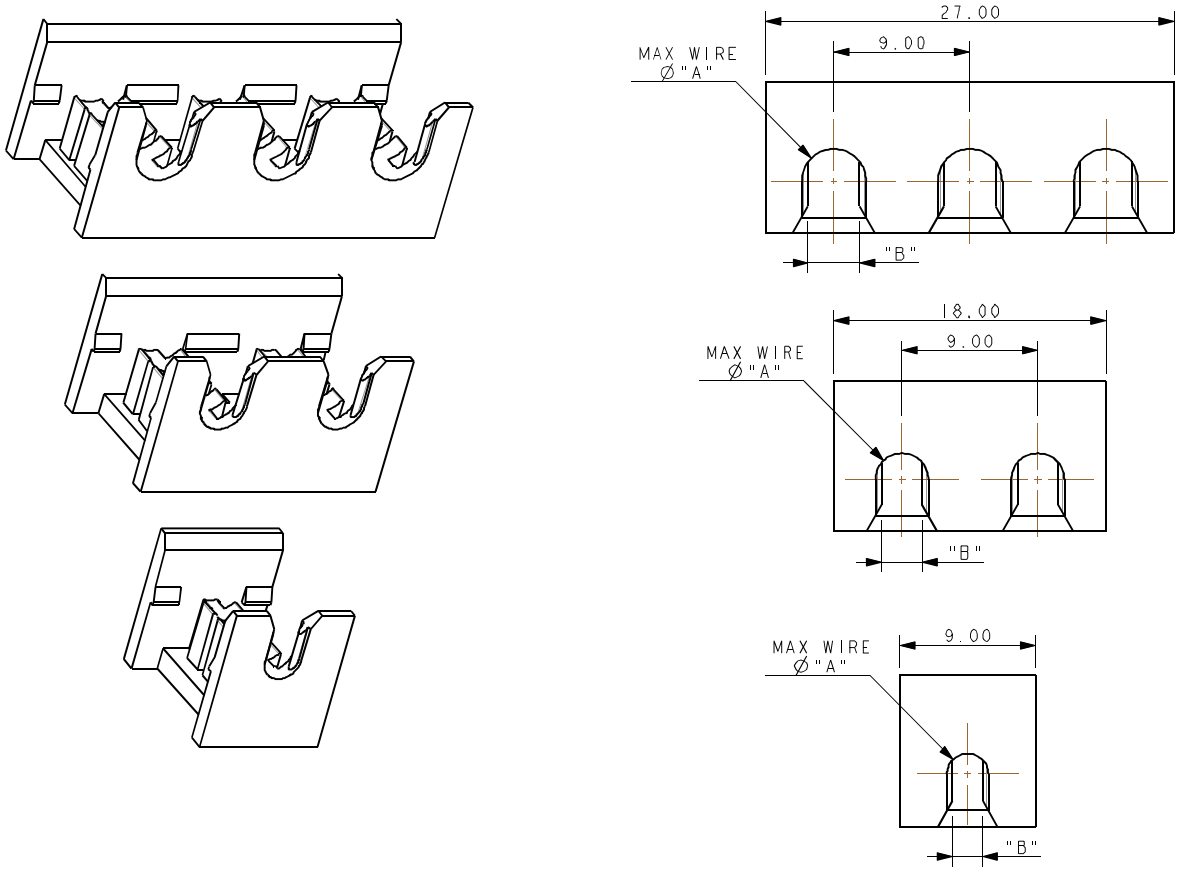

NOTES:
1. CAP FOR 9177 IDC WIRE TO BOARD CONNECTOR.
2. THROUGH WIRE CAP CAN BE USED AT ANY POSITION ALONG WIRE.
3. REFERS TO CAP, FOR WIRE MATCH TO CONNECTOR REFER TO TABLE ON PAGE 60.
4. MATERIAL: GLASS FILLED NYLON 46. FOR COLOR REFER TO PAGE 60.
5. CAPS DESIGNED TO ACCOMMODATE INSULATION DIAMETERS REFER TO PAGE 60.
6. GENERAL TOLERANCE ±0.20MM.
7. PACKED IN BAGS, 400 PIECES PER BAG.
8. APPLICATION NOTES REFER TO ELCO SPECIFICATION 201-01-124.

The Important Information/Disclaimer is incorporated in the catalog where these specifications came from or available online at www.avx.com/disclaimer/ by reference and should be reviewed in full before placing any order.

STANDARD 14-20 AWG: 00-9177

Insertion Tooling

INSERTION TOOLING – REQUIRES HAND PRESS WITH FLAT ROCK PLATES

RoHS COMPLIANT

1 WAY

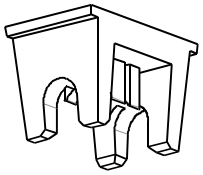

2 WAY

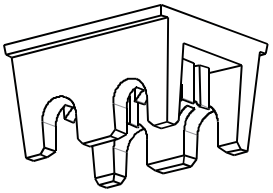

3 WAY

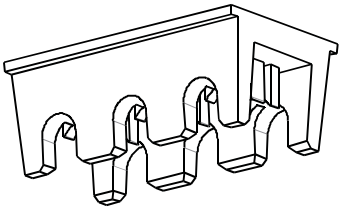

HIGH PRODUCTION
Metal

No. of Ways	Max Insulation Dia (AWG)	Tool Part Number
1	ø 4.25	06-9177-7017-01-001
	ø 3.50	06-9177-7017-02-001
	ø 2.75	06-9177-7017-03-001
2	ø 4.25	06-9177-7017-01-002
	ø 3.50	06-9177-7017-02-002
	ø 2.75	06-9177-7017-03-002
3	ø 4.25	06-9177-7017-01-003
	ø 3.50	06-9177-7017-02-003
	ø 2.75	06-9177-7017-03-003

MEDIUM PRODUCTION
Plastic

No. of Ways	Max Insulation Dia (AWG)	Tool Part Number
1	ø 4.25	06-9177-7016-01-001
	ø 3.50	06-9177-7016-02-001
	ø 2.75	06-9177-7016-03-001
2	ø 4.25	06-9177-7016-01-002
	ø 3.50	06-9177-7016-02-002
	ø 2.75	06-9177-7016-03-002
3	ø 4.25	06-9177-7016-01-003
	ø 3.50	06-9177-7016-02-003
	ø 2.75	06-9177-7016-03- 003

The assembly tooling restricts the available space/component heights on the PCB. For details see below.

NOTES:
1. ALL DIMENSIONS FOR REFERENCE DIMENSIONS.
2. MAXIMUM COMPONENT HEIGHT 0.80MM IN THIS AREA.
3. MAXIMUM COMPONENT HEIGHT 11.00 MM IN THIS AREA.
4. THE SAME RESTRICTIONS APPLY TO ALL WIRE INSULATION DIAMETERS.

INSERTION TOOLING – PCB RESTRICTED AREAS FOR ASSEMBLY TOOLING

1 WAY

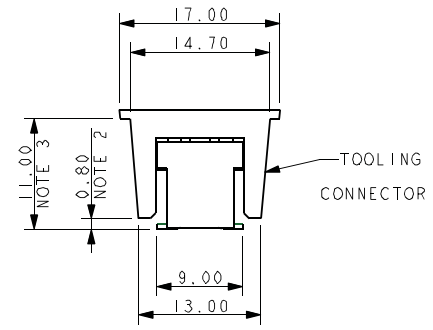

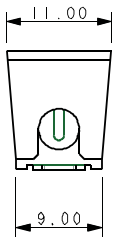

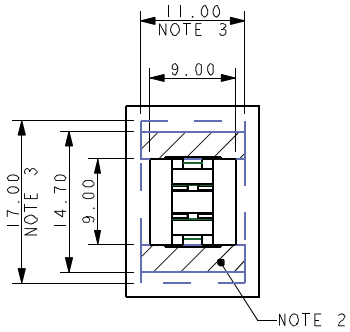

2 WAY

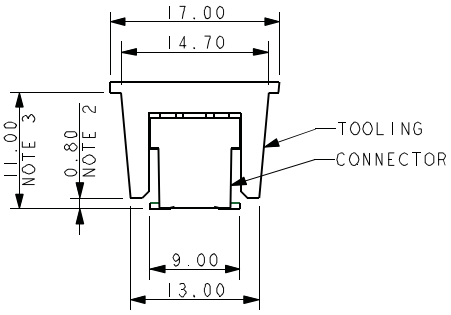

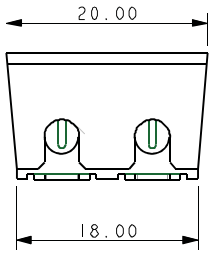

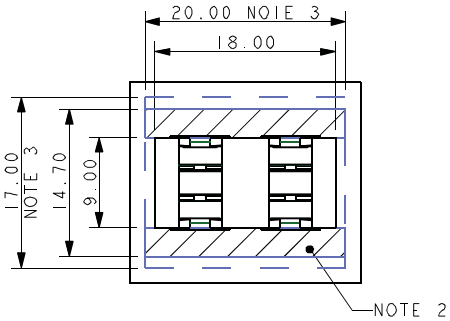

3 WAY

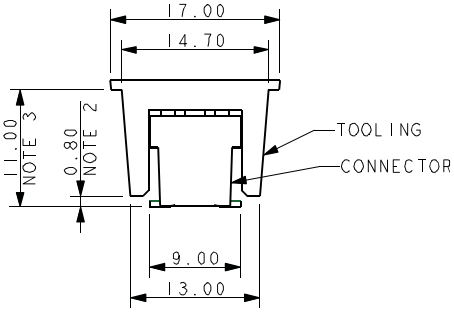

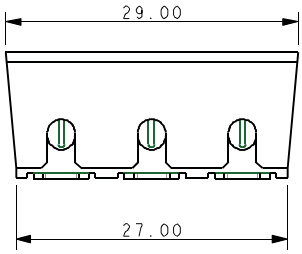

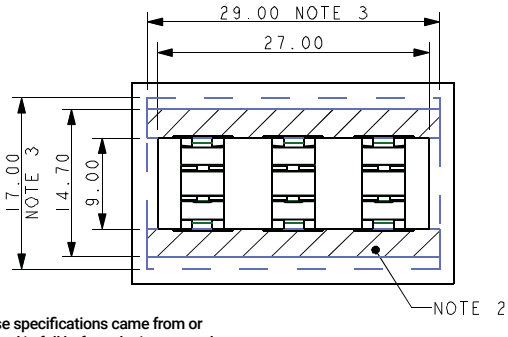

The Important Information/Disclaimer is incorporated in the catalog where these specifications came from or available online at www.avx.com/disclaimer/ by reference and should be reviewed in full before placing any order.

STANDARD 14-20 AWG: 00-9177

Assembled Connector

STANDARD CONNECTOR

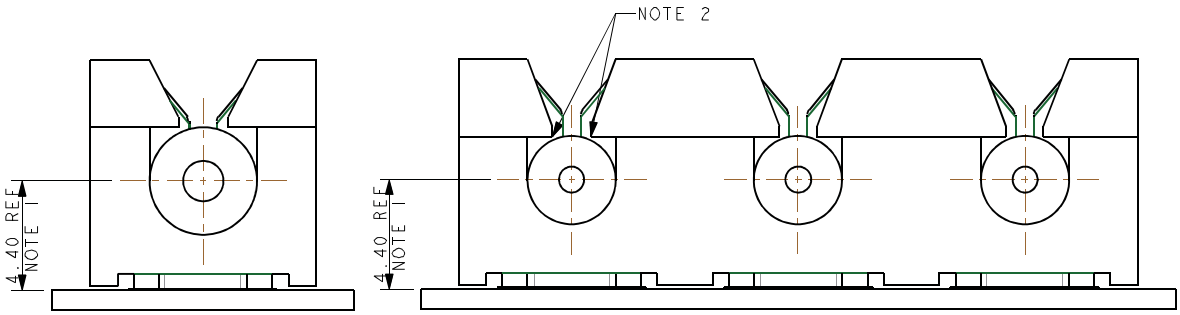

CONNECTOR WITH CAP

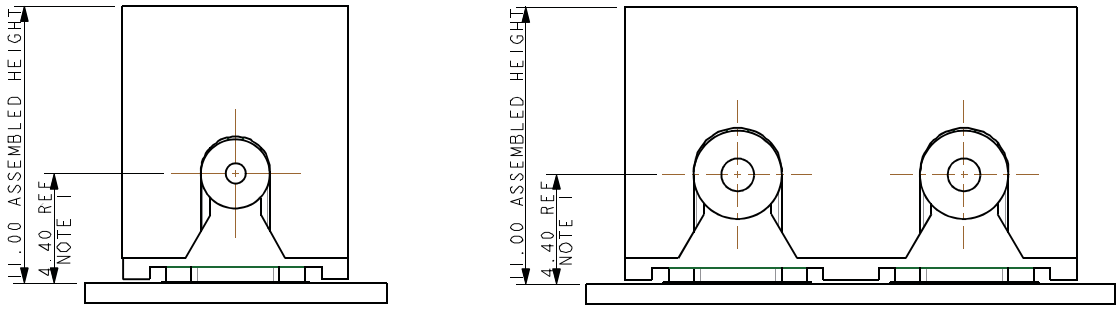

NOTES:

1. ASSEMBLED HEIGHTS INCLUDE 0.10mm ALLOWANCE FOR PAD AND SOLDER THICKNESS, NO ALLOWANCE HAS BEEN MADE FOR ANY SOLDER RESIST OR OTHER FEATURES.
2. WHEN THE WIRE IS ASSEMBLED THE INSULATION SHOULD BE TRAPPED BY THESE EDGES.

The Important Information/Disclaimer is incorporated in the catalog where these specifications came from or available online at www.avx.com/disclaimer/ by reference and should be reviewed in full before placing any order.

CAPPED THRU HOLE 12-18 AWG: 00-9177

General Information

KYOCERA AVX developed the initial SMT discrete wire IDC connector 5 years ago for 26- 28AWG wires. Since then, we have seen this Wire-to-Board (WTB) contact technology spread to multiple wire gauges and multiple configurations; standard connectors, capped connectors and single contacts. All of which addresses specific application or cost parameters set forth by our customer in demanding industrial, transportation or commercial applications. The heart of the IDC connector is the true "gas tight" WTB termination that is achieved once the wire is inserted between the dual phosphor bronze contact tines. These opposing tines provide enough spring characteristics to allow the termination to remain stable over extreme levels of temperature, shock and vibration.

The new 9177-600 family of contacts incorporates all of the above mentioned capabilities. From low cost single contacts to fully integrated capped contacts. The unique feature of the 600 series is the fact that it was developed for Plated Through Hole (PTH) termination to the PCB. This addresses the rugged power type boards that have to handle larger wire gauges up to 12AWG and 15 Amps per contact of current. The PTH option provides robust PCB attachment and high current capabilities to replace older technology connectors or in most cases soldering stripped wires directly to the PCB.

APPLICATIONS

- Industrial pumps, motors and driver boards
- Solar and alternative energy products
- Commercial electrical equipment
- Reference Product Specification & application notes 201-01-141/142

FEATURES AND BENEFITS

- IDC contact provides a "gas tight" wire termination to the PCB to meet harsh industrial environments
- Simple, robust design offers a high performance solution to hand soldering large gauge wires to a PCB
- A single contact an handle up to 15A for high current applications with wire replacement up to 3 times
- The versatile family of IDC contact can accept 12-18AWG of stranded wires and can be tested for compliance with solid wires

ELECTRICAL

- Current Rating: 15A
- Voltage Rating: 600 VAC

ENVIRONMENTAL

- Operating Temperature: -40ºC to +125ºC

MECHANICAL

- Insulator Material: Nylon 46, UL94VO
- Contact Material: Phosphor Bronze
- Plating: Tin over Nickel
- Durability: Wires can be replaced up to 3 time

HOW TO ORDER

00 — Prefix

9177 — Series

00X — Number of Ways

Code	No of Ways	Details
001	1	Page 69

0XX — Wire Insulation/Gauge Size

Code	Style	Accepted Wire Gauge	Wire Insulation
691	Though Hole Mount	12 AWG Solid or Stranded	Ø 4.25 Max
601	Though Hole Mount	14 AWG Solid or Stranded	Ø 4.25 Max
612	Though Hole Mount	16 AWG Solid or Stranded	Ø 3.50 Max
622	Though Hole Mount	18 AWG Solid or Stranded	Ø 3.50 Max

XX — Color/Approval

Code	Insulator Color	Cap Type	Description
00	Black - Special Order	Through Wire	Any Position Along Wire
09	Black - Special Order	Wire Stop	End of Wire - Includes Stop
10	White - Standard	Through Wire	Any Position Along Wire
19	White - Standard	Wire Stop	End of Wire - Includes Stop

6 — Plating Option

6 = Pure Tin all Over

RoHS COMPLIANT

The Important Information/Disclaimer is incorporated in the catalog where these specifications came from or available online at www.avx.com/disclaimer/ by reference and should be reviewed in full before placing any order.

CAPPED THRU HOLE 12-18 AWG: 00-9177

1 Position - Through Wire

12 - 18 AWG 1 WAY IDC CONNECTOR WIRE THROUGH CAP

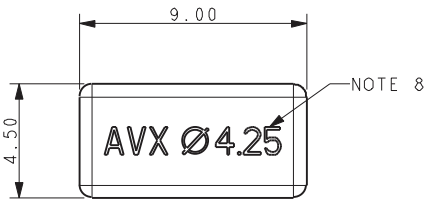

NOTES:

1. CONNECTOR FOR IDC WIRE TO BOARD CONNECTION, WIRE THROUGH CAP, CAN BE ASSEMBLED AT ANY POSITION ALONG A WIRE.
2. CONTACT MATERIAL: PHOSPHOR BRONZE. INSULATION MATERIAL: HIGH TEMP NYLON 46, UL94 V-0. COLOR REFER TO PAGE 68.
3. CONNECTOR DESIGNED TO ACCEPT BETWEEN 12 AND 18 AWG STRANDED WIRE.
4. ALL DIMENSIONS ±0.20 UNLESS TOLERANCED.
5. FOR FULL PRODUCT SPECIFICATION ON STANDARD CONNECTORS REFER TO ELCO SPEC 201-01-141.
6. APPLICATION NOTES 201-01-142.
7. OUTLINE OF CAP. NO SPACE FOR COMPONENTS.
8. TEST TO INDICATE MAXIMUM INSULATION DIAMETER.

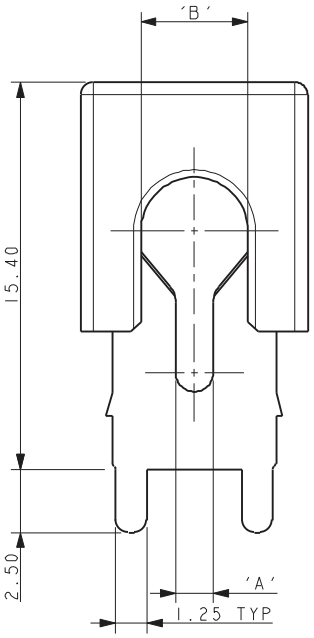

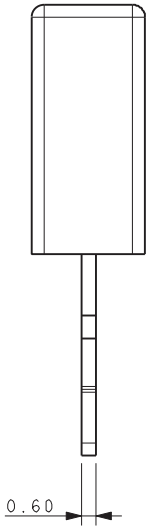

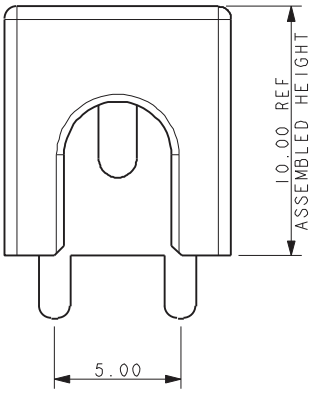

Code	Accepted Wire Gauge	A	Wire Insulation	B
691	12 AWG Solid or Stranded	1.50	Ø4.25 Max	4.25
601	14 AWG Solid or Stranded	1.10	Ø4.25 Max	4.25
612	16 AWG Solid or Stranded	0.82	Ø3.50 Max	3.50
622	18 AWG Solid or Stranded	0.72	Ø3.50 Max	3.50

PACKING DETAILS

330mm DIAMETER REEL

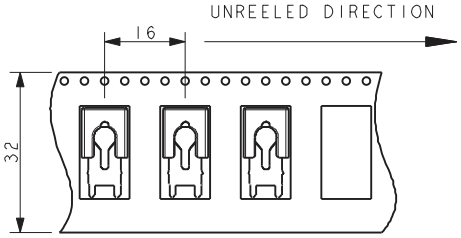

QUANTITY PER REEL 800

SMT PCB LAYOUT

PURE TIN PADS

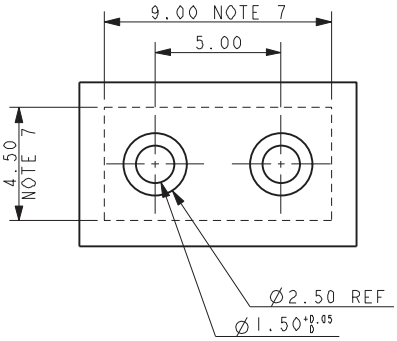

The Important Information/Disclaimer is incorporated in the catalog where these specifications came from or available online at www.avx.com/disclaimer/ by reference and should be reviewed in full before placing any order.

CAPPED THRU HOLE 12-18 AWG: 00-9177

1 Position - Wire Stop

12 - 18 AWG 1 WAY IDC CONNECTOR WIRE STOP CAP

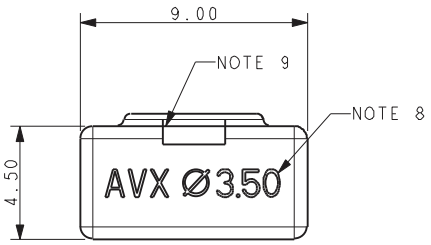

NOTES:
1. CONNECTOR FOR IDC WIRE TO BORAD CONNECTION, WIRE STOP CAP, FOR USE AT WIRE END.
2. CONTACT MATERIAL: PHOSPHOR BRONZE. INSULATION MATERIAL: HIGH TEMP NYLON 46, UL94 V-0. COLOR REFER TO PAGE 68.
3. CONNECTOR DESIGNED TO ACCEPT BETWEEN 12 AND 18 AWG STRANDED WIRE.
4. ALL DIMENSIONS ±0.20 UNLESS TOLERANCED.
5. FOR FULL PRODUCT SPECIFICATION ON STANDARD CONNECTORS REFER TO ELCO SPEC 201-01-141.
6. APPLICATION NOTES 201-01-142.
7. OUTLINE OF CAP. NO SPACE FOR COMPONENTS.
8. TEST TO INDICATE MAXIMUM INSULATION DIAMETER.
9. SLOT TO CHECK WIRE POSITION BEFORE ASSEMBLY.

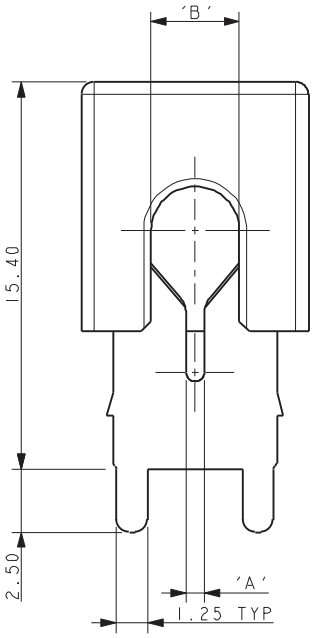

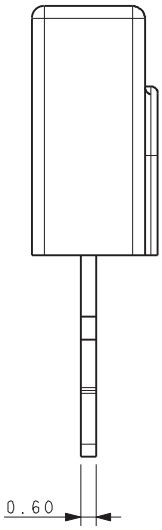

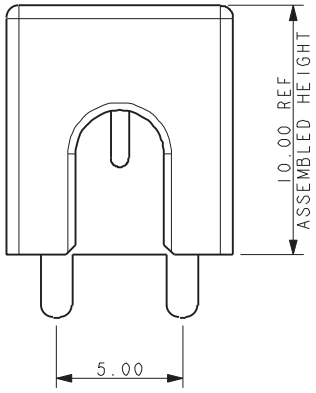

Code	Accepted Wire Gauge	A	Wire Insulation	B
691	12 AWG Solid or Stranded	1.50	Ø4.25 Max	4.25
601	14 AWG Solid or Stranded	1.10	Ø4.25 Max	4.25
612	16 AWG Solid or Stranded	0.82	Ø3.50 Max	3.50
622	18 AWG Solid or Stranded	0.72	Ø3.50 Max	3.50

PACKING DETAILS

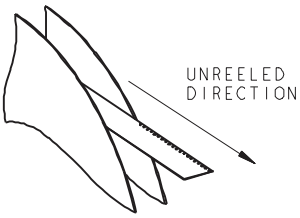

330mm DIAMETER REEL

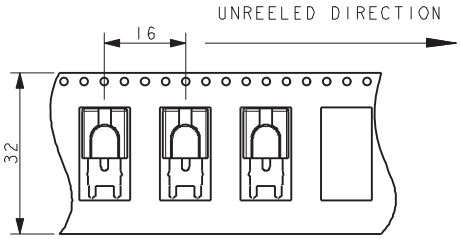

SMT PCB LAYOUT

PURE TIN PADS

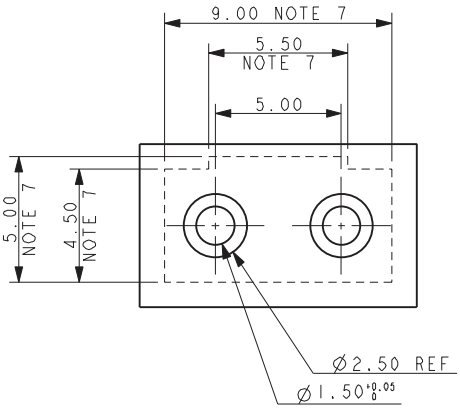

The Important Information/Disclaimer is incorporated in the catalog where these specifications came from or available online at www.avx.com/disclaimer/ by reference and should be reviewed in full before placing any order.

SINGLE THRU HOLE IDC CONTACT 12-18 AWG: 9177-600

General Information

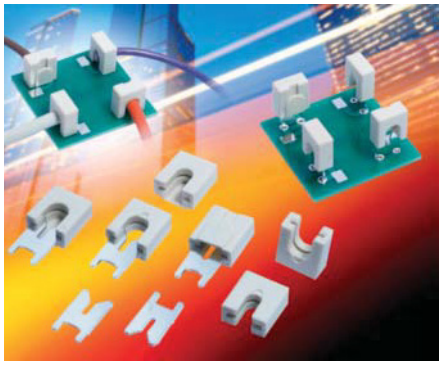

KYOCERA AVX developed the initial SMT discrete wire IDC connector 5 years ago for 26-28AWG wires. Since then, we have seen this Wire-to-Board (WTB) contact technology spread to multiple wire gauges and multiple configurations; standard connectors, capped connectors and single contacts. All of which addresses specific application or cost parameters set forth by our customer in demanding industrial, transportation or commercial applications. The heart of the IDC connector is the true "gas tight" WTB termination that is achieved once the wire is inserted between the dual phosphor bronze contact tines. These opposing tines provide enough spring characteristics to allow the termination to remain stable over extreme levels of temperature, shock and vibration.

The new 9177-600 family of contacts incorporates all of the above mentioned capabilities. From low cost single contacts to fully integrated capped contacts. The unique feature of the 600 series is the fact that it was developed for Plated Through Hole (PTH) termination to the PCB. This addresses the rugged power type boards that have to handle larger wire gauges up to 12AWG and 15 Amps per contact of current. The PTH option provides robust PCB attachment and high current capabilities to replace older technology connectors or in most cases soldering stripped wires directly to the PCB.

APPLICATIONS

- Industrial pumps, motors and driver boards
- Solar and alternative energy products
- Commercial electrical equipment
- Reference Product Specification & application notes 201-01-141/142

FEATURES AND BENEFITS

- IDC contact provides a "gas tight" wire termination to the PCB to meet harsh industrial environments
- Simple, robust design offers a high performance solution to hand soldering large gauge wires to a PCB
- A single contact an handle up to 15A for high current applications with wire replacement up to 3 times
- The versatile family of IDC contact can accept 12-18AWG of stranded wires and can be tested for compliance with solid wires

ELECTRICAL

- Current Rating: 15A
- Voltage Rating: 600 VAC

ENVIRONMENTAL

- Operating Temperature: -40°C to +125°C

MECHANICAL

- Insulator Material: Nylon 46, UL94VO
- Contact Material: Phosphor Bronze
- Plating: Tin over Nickel
- Durability: Wires can be replaced up to 3 time

HOW TO ORDER – CONTACT OPTIONS

70 — Prefix: 70 = Contact

9177 — Series

001 — Number of Ways

Code	No of Ways	Details
001	1	Page 72

6XX — Wire Gauge Size

Code	Accepted Wire Gauge
691	12 AWG Solid or Stranded
601	14 AWG Solid or Stranded
612	16 AWG Solid or Stranded
622	18 AWG Solid or Stranded

006 — Plating Option: 006 = Pure Tin all Over

RoHS COMPLIANT

HOW TO ORDER – CAP OPTIONS

60 — Prefix: 60 = Cap

9177 — Series

001 — Number of Ways

Code	No of Ways	Details
001	1	Pages 74-75

6XX — Wire Insulation Diameter

Code	Wire Insulation (AWG)	Diameter "A"
627	Ø 2.10 - 2.75	2.75
635	Ø 2.75 - 3.50	3.50
642	Ø 3.50 - 4.25	4.25

X — Color Options

Code	Color	Application
0	Black	Special Order
1	White	Standard

XX — Assembly Options

Code	Description
00	Through Wire
99	With Stop

KYOCERA AVX | The Important Information/Disclaimer is incorporated in the catalog where these specifications came from or available online at www.avx.com/disclaimer/ by reference and should be reviewed in full before placing any order.

70-9177-001-6XX-006
CONTACT DETAILS

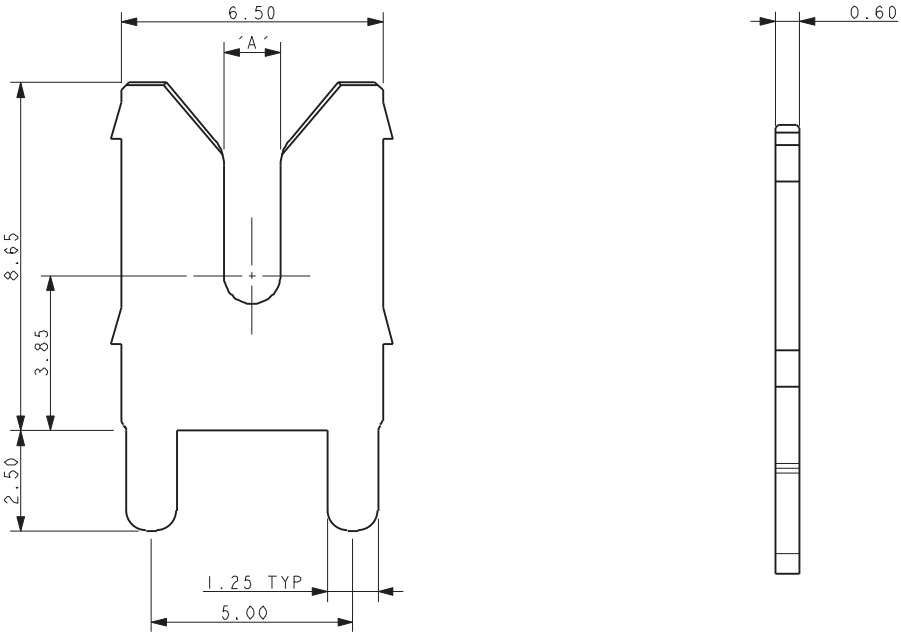

PCB LAYOUT FOR CONTACT

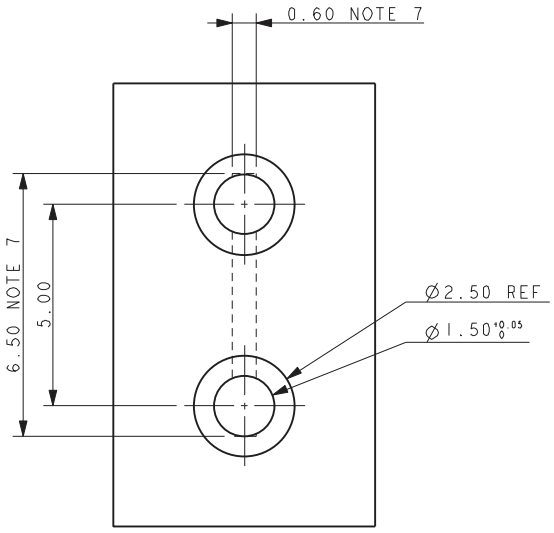

Code	Accepted Wire Gauge	A
691	12 AWG Solid or Stranded	1.50
601	14 AWG Solid or Stranded	1.10
612	16 AWG Solid or Stranded	0.82
622	18 AWG Solid or Stranded	0.72

NOTES:
1. IDC CONTACT OT ACCEPT WIRES FROM 12 AWG TO 18 AWG.
2. MATERIAL: PHOSPHOR BRONZE.
3. PLATING PURE TIN OVER NICKEL.
4. ALL DIMENSIONS ±0.20 UNLESS SPECIFIED.
5. PACKING IN BAGS, 800 PIECES PER BAG.
6. PRODUCT SPECIFICATION REFER TO 201-01-141.
7. OUTLINE OF CONTACT SEE PAGE 71 FOR ADDITIONAL CLEARANCE REQUIRED FOR WIRE INSERTION TOOL.
8. FOR ASSEMBLY DETAILS REFER TO APPLICATION NOTES 201-01-142.

The Important Information/Disclaimer is incorporated in the catalog where these specifications came from or available online at www.avx.com/disclaimer/ by reference and should be reviewed in full before placing any order.

ASSEMBLY TOOLING

Part Number	Wire Insulation	A
06-9177-7021-01-000	Ø 3.50 - 4.25	4.25
06-9177-7021-02-000	Ø 3.50 - 4.50	3.50
06-9177-7021-03-000	Ø 3.50 - 2.75	2.75

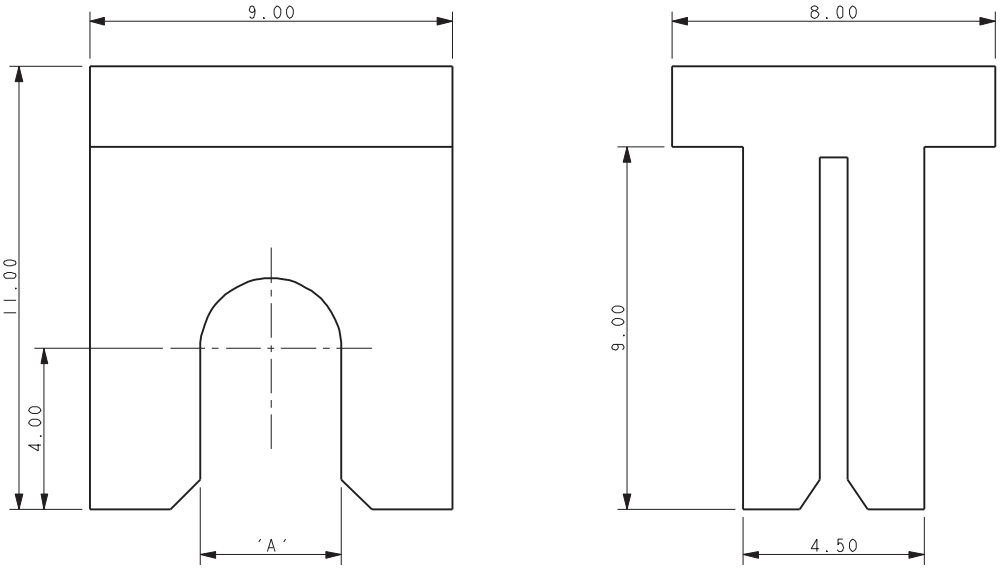

NOTES:
1. WIRE INSERTION TOOL 06-9177-7021-0X-000, FULL PART NUMBER REFER TO TABLE.
2. TOOL PART NUMBER DEPENDENT ON WIRE INSULATION DIAMETER NOT WIRE GAUGE OR CONTACT NUMBER.
3. ASSEMBLY DETAILS REFER TO APPLICATION NOTES 201-01-142
4. MATERIAL: TOOL STEEL.
5. APACE REQUIRED ON PCB FOR TOO. NO COMPONENTS IN THIS AREA.

PCB CLEARANCE AREA FOR TOOL

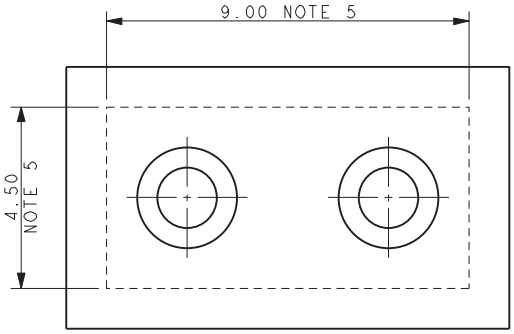

The Important Information/Disclaimer is incorporated in the catalog where these specifications came from or available online at www.avx.com/disclaimer/ by reference and should be reviewed in full before placing any order.

60-9177-001-6XX-X00 1 WAY WIRE THROUGH CAP DETAILS

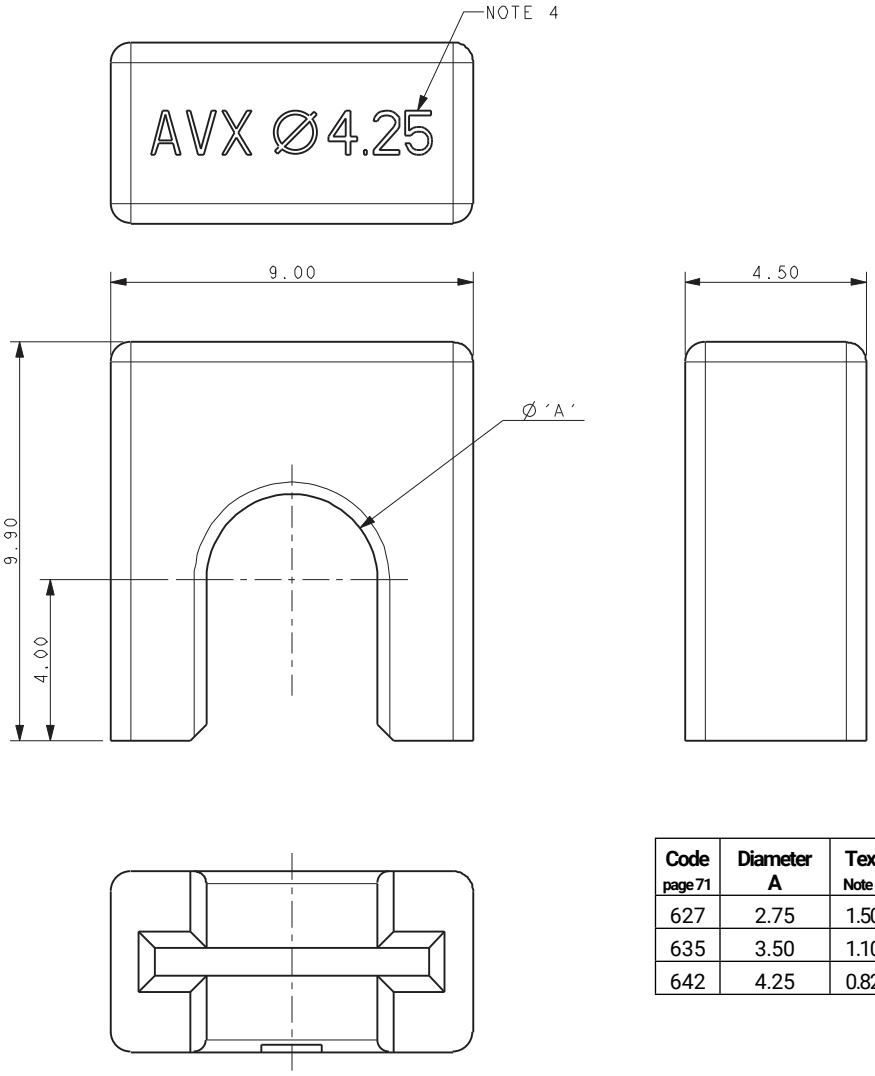

Code page 71	Diameter A	Text Note 4
627	2.75	1.50
635	3.50	1.10
642	4.25	0.82

NOTES:
1. CAP FOR IDC WIRE TO BOARD CONNECTION, 1 WAY WITH THROUGH WIRE.
2. WIRE THROUGH CAP FOR ASSEMBLY AT ANY POSITION ON A WIRE.
3. CAP MATERIAL: GLASS FILLED NYLON 46, UL94 V-0. COLOR SEE PAGE 71.
4. CAP DESIGNED TO ACCOMMODATE WIRE INSULTATION.
   DIAMETERS 2.10MM TO 2.75MM, 2.75MM TO 3.50MM AND 3.50MM TO 4.25MM.
5. ALL DIMENSIONS ±0.20 UNLESS STATED.
6. PACKED IN BAGS, QUANTITY 800 PIECES PER BAG.
7. PRODUCT SPECIFICATION REFER TO 201-01-141.
8. FOR ASSEMBLY DETAILS REFER TO APPLICATION NOTES 201-01-142.

The Important Information/Disclaimer is incorporated in the catalog where these specifications came from or available online at www.avx.com/disclaimer/ by reference and should be reviewed in full before placing any order.

60-9177-001-6XX-X99 1 WAY WIRE STOP
CAP DETAILS

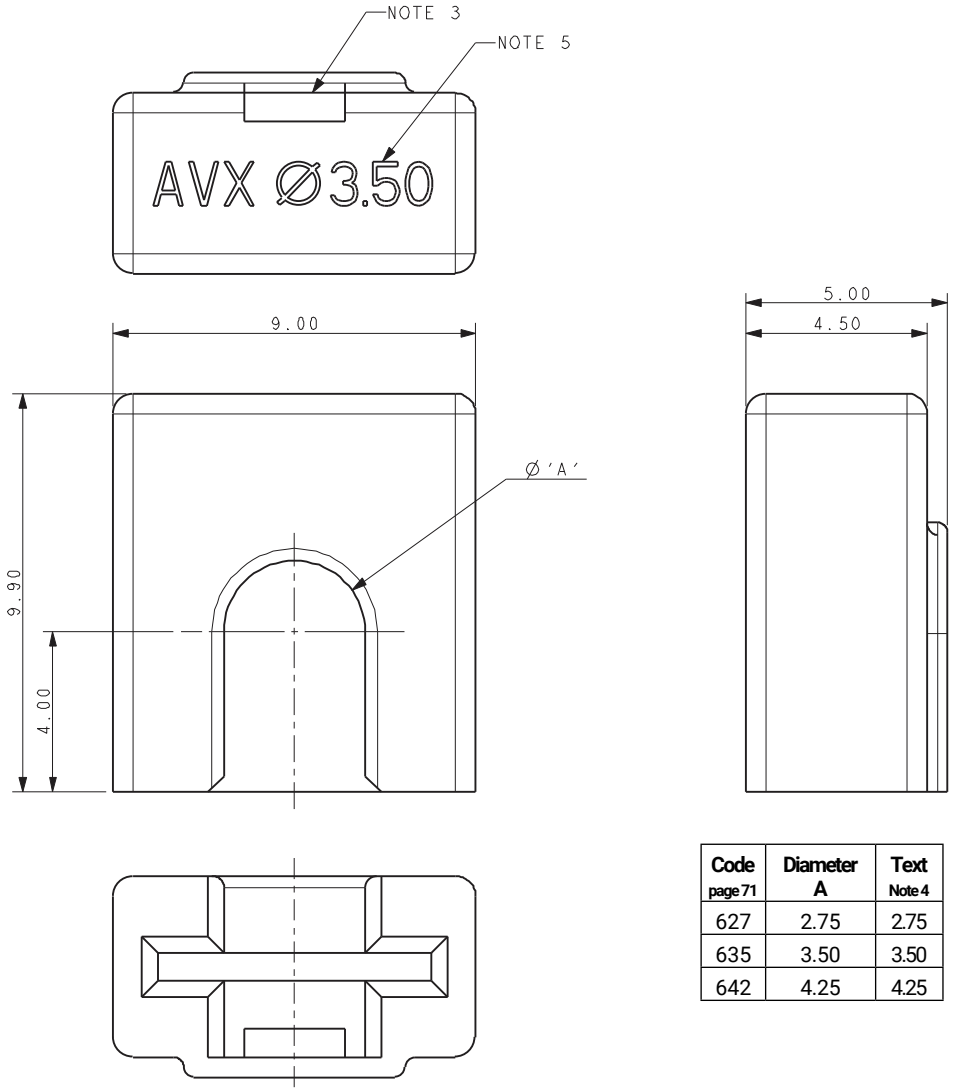

Code page 71	Diameter A	Text Note 4
627	2.75	2.75
635	3.50	3.50
642	4.25	4.25

NOTES:
1. CCAP FOR IDC WIRE TO BOARD CONNECTION, 1 WAY WITH WIRE STOP.
2. WIRE STOP FOR USE AT END OF WIRE.
3. SLOT TO CHECK WIRE POSITION BEFORE ASSEMBLY.
4. CAP MATERIAL: GLASS FILLED NYLON 46, UL94 V-0. COLOR SEE PAGE 71.
5. CAP DESIGNED TO ACCOMMODATE WIRE INSULTATION.
   DIAMETERS 2.10MM TO 2.75MM, 2.75MM TO 3.50MM AND 3.50MM TO 4.25MM.
6. ALL DIMENSIONS ±0.20 UNLESS STATED.
7. PACKED IN BAGS, QUANTITY 800 PIECES PER BAG.
8. PRODUCT SPECIFICATION REFER TO 201-01-141.
9. FOR ASSEMBLY DETAILS REFER TO APPLICATION NOTES 201-01-142.

The Important Information/Disclaimer is incorporated in the catalog where these specifications came from or available online at www.avx.com/disclaimer/ by reference and should be reviewed in full before placing any order.

POKE-HOME: HORIZONTAL 26 AWG: 00-9276

General Information

The new 9276 series connector provides a quick and reliable wire-to-board termination in a sleek 2.5mm pitch SMT package for a broad range of industrial and commercial markets. With almost every product on the market today having to deal with a small number of discrete wires to connect components to a board, the 9276 series connectors meets this challenge by simply stripping the wire and inserting them into the connector. This makes the connector very termination friendly within the factory as well as in the field by electrical installers. Developed for harsh industrial and Solid State Lighting (SSL) applications, the connector was designed with a high spring force Beryllium Copper upper spring contact to accept a wide range (18-26 AWG solid or stranded) of wire to meet multiple applications with a single connector. By incorporating a dual-contact design we were able to maximize current rating (6 Amps) and minimize PCB space. For example, the 4p connector has a footprint of 90 sq-mm while competing products are 160 sq-mm. The dual-contact design also provides two solder points for each wire eliminating the need for external anchor tabs. KYOCERA AVX provides a small insertion / extraction tool which will allow the wires to easily be replaced up to 5 times.

APPLICATIONS

- Connecting discrete wire components directly to the PCB
- Bringing power and signals onto a PCB
- Daisy chaining PCB's together to create a continuous string of boards
- Application notes: refer to 201-01-127

FEATURES AND BENEFITS

- Simple strip, insert and removal design
- SMT RoHS termination to the PCB with minimal footprint
- Accepts 18-26 AWG Solid and Stranded wires
- Expanded size offering to maximize application potential; 1, 2, 3, 4, 6 & 8 positions
- High spring force top contact provides a lance type retention to capture and retain the wire
- Available in standard white and optional black color

ELECTRICAL

- Current Rating: 6 Amps / Contact
- Voltage Rating: 300 VAC

ENVIRONMENTAL

- Operating Temperature: -40°C to +125°C

MECHANICAL

- Insulator Material: Glass-Filled Nylon 46; UL94V0
- Contact Material: Beryllium Copper / Phosphor Bronze
- Plating: Tin over Nickel
- Replaceability: 5 Cycles

HOW TO ORDER

00 — Wire to Board Connector

9276 — Series

00X — Number of Ways

Code	No of Ways	Details
001	1	Page 78
002	2	Page 79
003	3	Page 80
004	4	Page 81
006	6	Page 82
008	8	Page 83

0 — Horizontal Mountin

21 — Wire Gauge Size

Code	Accepted Wire Gauge	Max Conductor	Max Insulation
21	18-26 AWG Solid or Standed	1.20mm Diameter	2.10mm Diameter

X — Insulator Color
9 = UL White
8 = UL Black

06 — Plating Option
06 = Pure Tin all Over

RoHS COMPLIANT

Thin Blade Removal Tool
Part Number 06-9276-7001-01-000

Certification: UL File #E90723

The Important Information/Disclaimer is incorporated in the catalog where these specifications came from or available online at www.avx.com/disclaimer/ by reference and should be reviewed in full before placing any order.

WIRE ASSEMBLY

FOR FURTHER DETAILS REFER TO APPLICATION NOTES 201-01-127

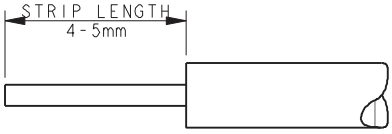

TRIM INSULATION.
DO NOT CRUSH CENTER OF WIRE.
STRANDED WIRES TWISTED TOGETHER BEFORE INSERTION.
CHECK ALL STANDS OF WIRE ARE CORRECTLY ALIGNED
AFTER THE INSULATION IS REMOVED.

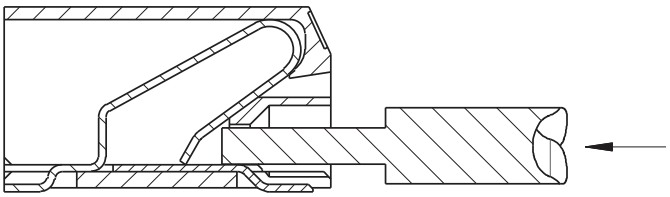

PUSH WIRE INTO HOLE IN FRONT OF CONNECTOR
DO NOT BEND CONNECTOR

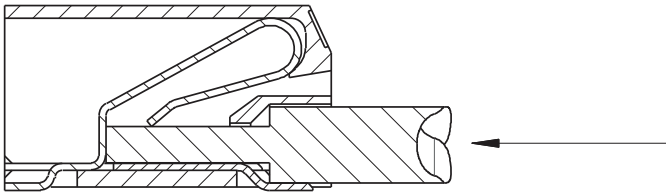

CONTINUED TO PUSH WIRE UNTIL STOP IS REACHED.

WIRE EXTRACTION

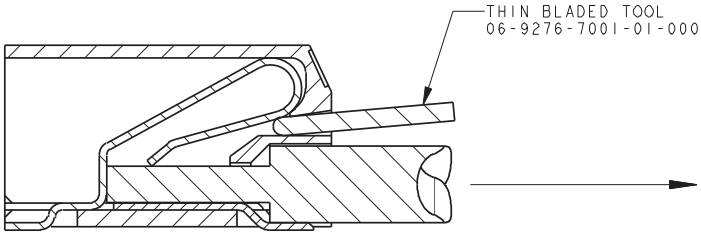

PUSH BLADE (NOT SHARP) INTO SLOT ABOVE WIRE.
WHEN WIRE IS FREE, PULL TO EXTRACT.

The Important Information/Disclaimer is incorporated in the catalog where these specifications came from or available online at www.avx.com/disclaimer/ by reference and should be reviewed in full before placing any order.

1 WAY WIRE TO BOARD CONNECTOR

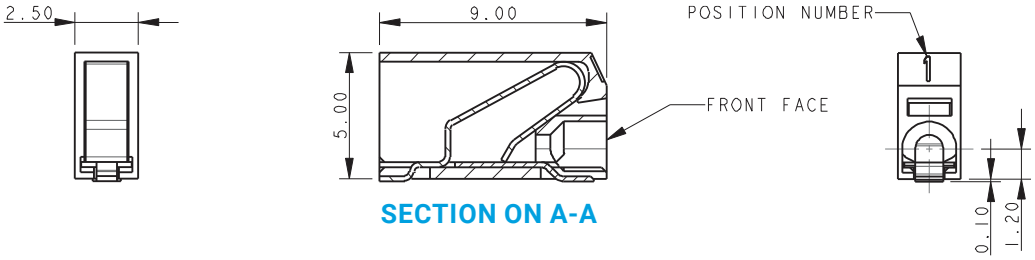

SECTION ON A-A

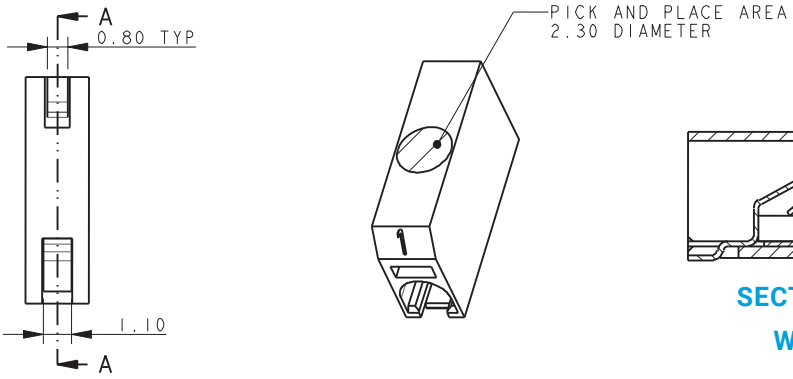

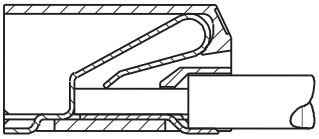

SECTION ON A-A
WITH WIRE

NOTES:
1. 9276 ONE WAY CONNECTOR, REFER TO ELCO SPECIFICATION 201-01- 125 AND APPLICATION NOTES 201-01-127 FOR FURTHER DETAILS
2. INSULATOR MATERIAL: NYLON 46, GLASS FILLED, UL94 V-0, COLOR REFER TO PAGE 76.
3. CONTACT MATERIAL: COPPER ALLOY, 0.20MM THICK, TIN PLATED.
4. OUTLINE OF CONNECTOR.
5. WIRE ASSEMBLY / EXTRACTION, REFER TO PAGE 77.
6. FRONT FACE OF CONNECTOR CAN BE IN LINE WITH EDGE OF PCB.
7. PACKING TAPE AND REEL, QUANTITY 1000 PER REEL.

PACKING DETAILS

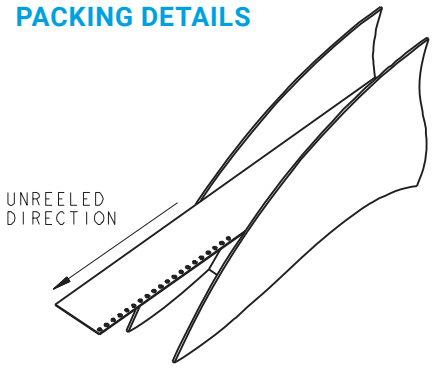

1 WAY PCB BOARD LAYOUT

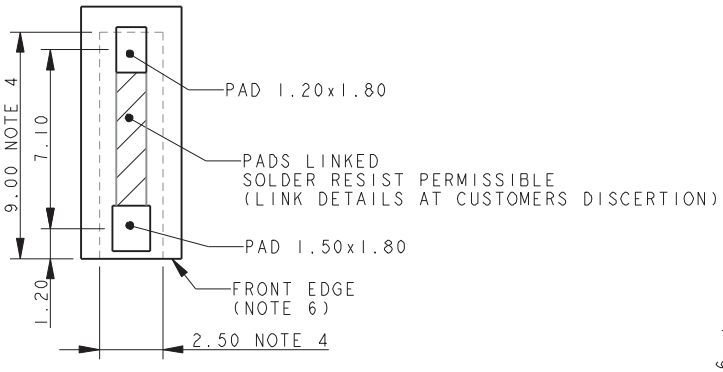

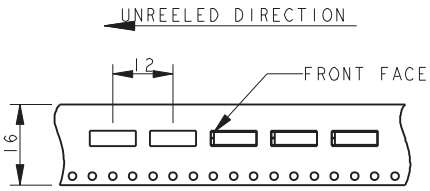

The Important Information/Disclaimer is incorporated in the catalog where these specifications came from or available online at www.avx.com/disclaimer/ by reference and should be reviewed in full before placing any order.

2 WAY WIRE TO BOARD CONNECTOR

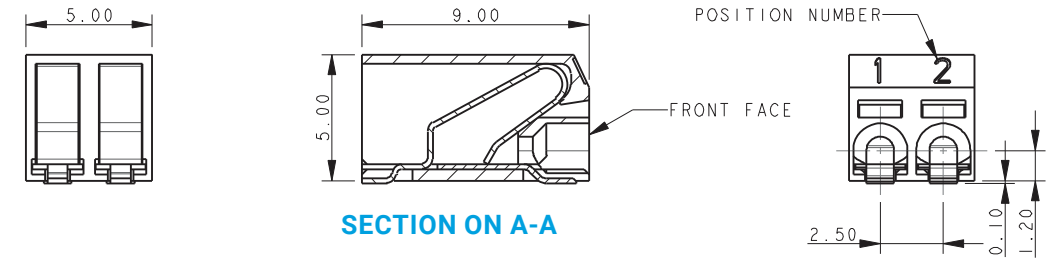

SECTION ON A-A

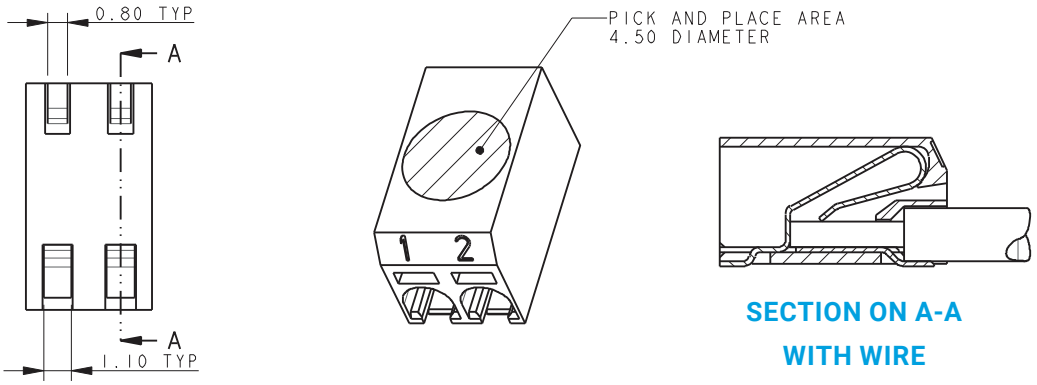

SECTION ON A-A
WITH WIRE

NOTES:
1. 9276 TWO WAY CONNECTOR, REFER TO ELCO SPECIFICATION 201-01-125 AND APPLICATION NOTES 201-01-127 FOR FURTHER DETAILS
2. INSULATOR MATERIAL: NYLON 46, GLASS FILLED, UL94 V-0, COLOR REFER TO PAGE 76.
3. CONTACT MATERIAL: COPPER ALLOY, 0.20MM THICK, TIN PLATED.
4. OUTLINE OF CONNECTOR.
5. WIRE ASSEMBLY / EXTRACTION, REFER TO PAGE 77.
6. FRONT FACE OF CONNECTOR CAN BE IN LINE WITH EDGE OF PCB.
7. PACKING TAPE AND REEL, QUANTITY 1000 PER REEL.

PACKING DETAILS

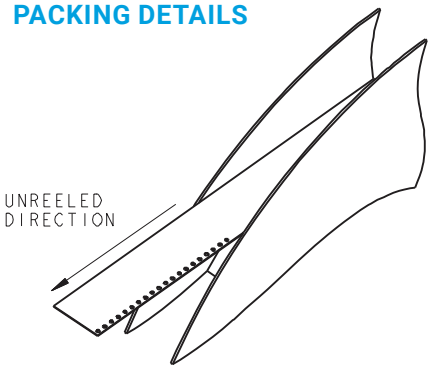

2 WAY PCB BOARD LAYOUT

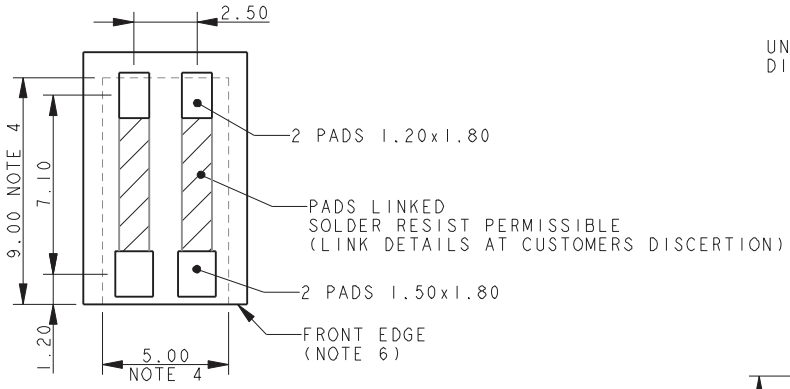

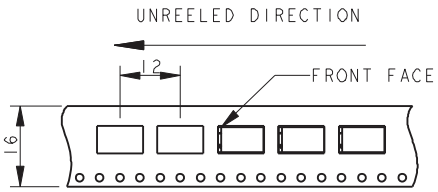

The Important Information/Disclaimer is incorporated in the catalog where these specifications came from or available online at www.avx.com/disclaimer/ by reference and should be reviewed in full before placing any order.

POKE-HOME: HORIZONTAL
18-26 AWG: 00-9276
3 Position

3 WAY WIRE TO BOARD CONNECTOR

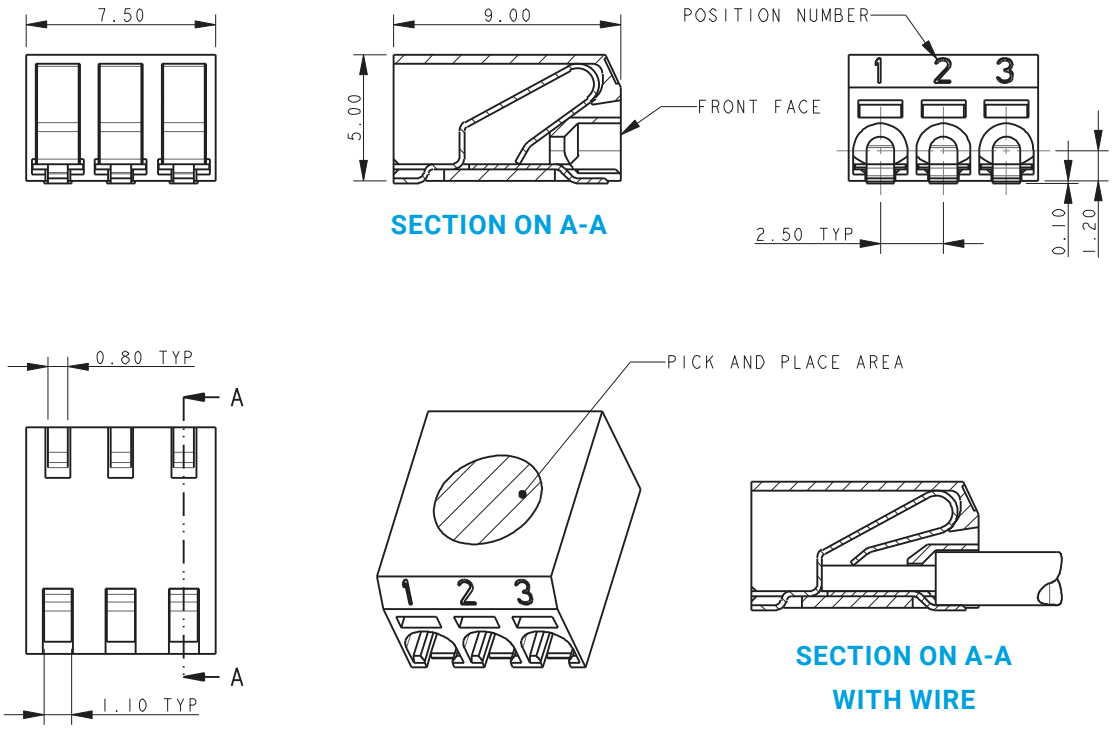

NOTES:
1. 9276 THREE WAY CONNECTOR, REFER TO ELCO SPECIFICATION 201-01-125 AND APPLICATION NOTES 201-01-127 FOR FURTHER DETAILS
2. INSULATOR MATERIAL: NYLON 46, GLASS FILLED, UL94 V-0, COLOR REFER TO PAGE 76.
3. CONTACT MATERIAL: COPPER ALLOY, 0.20MM THICK, TIN PLATED.
4. OUTLINE OF CONNECTOR.
5. WIRE ASSEMBLY / EXTRACTION, REFER TO PAGE 77.
6. FRONT FACE OF CONNECTOR CAN BE IN LINE WITH EDGE OF PCB.
7. PACKING TAPE AND REEL, QUANTITY 1000 PER REEL.

3 WAY PCB BOARD LAYOUT

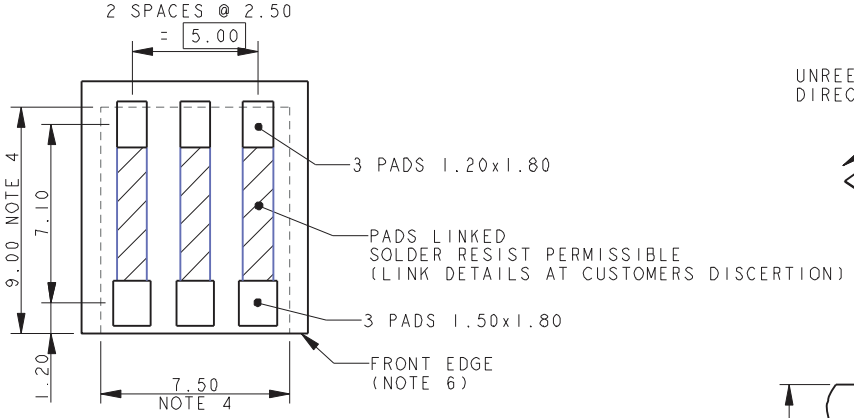

PACKING DETAILS

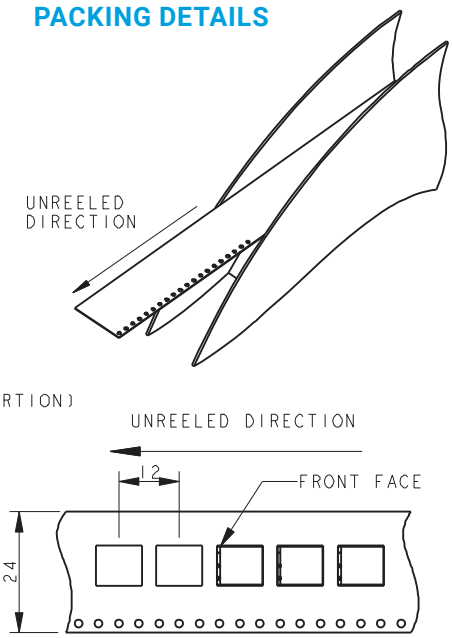

The Important Information/Disclaimer is incorporated in the catalog where these specifications came from or available online at www.avx.com/disclaimer/ by reference and should be reviewed in full before placing any order.

POKE-HOME: HORIZONTAL
18-26 AWG: 00-9276
4 Position

4 WAY WIRE TO BOARD CONNECTOR

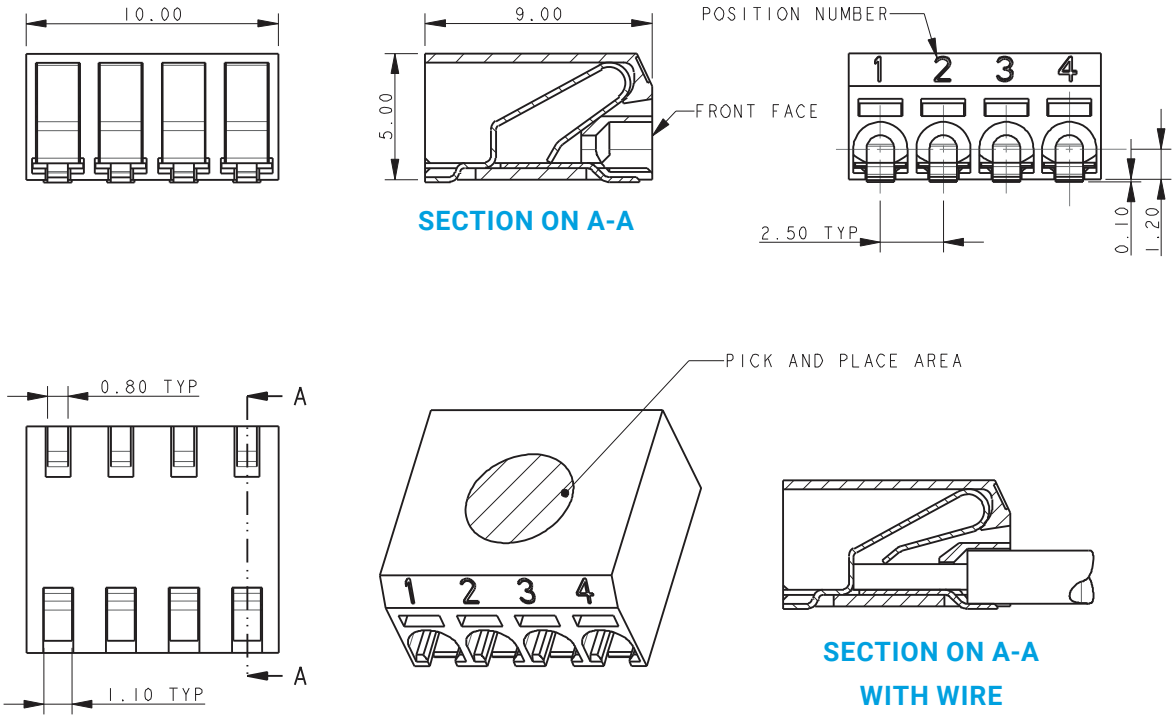

NOTES:
1. 9276 FOUR WAY CONNECTOR, REFER TO ELCO SPECIFICATION 201-01-125 AND APPLICATION NOTES 201-01-127 FOR FURTHER DETAILS
2. INSULATOR MATERIAL: NYLON 46, GLASS FILLED, UL94 V-0, COLOR REFER TO PAGE 76.
3. CONTACT MATERIAL: COPPER ALLOY, 0.20MM THICK, TIN PLATED.
4. OUTLINE OF CONNECTOR.
5. WIRE ASSEMBLY / EXTRACTION, REFER TO PAGE 77.
6. FRONT FACE OF CONNECTOR CAN BE IN LINE WITH EDGE OF PCB.
7. PACKING TAPE AND REEL, QUANTITY 1000 PER REEL.

4 WAY PCB BOARD LAYOUT

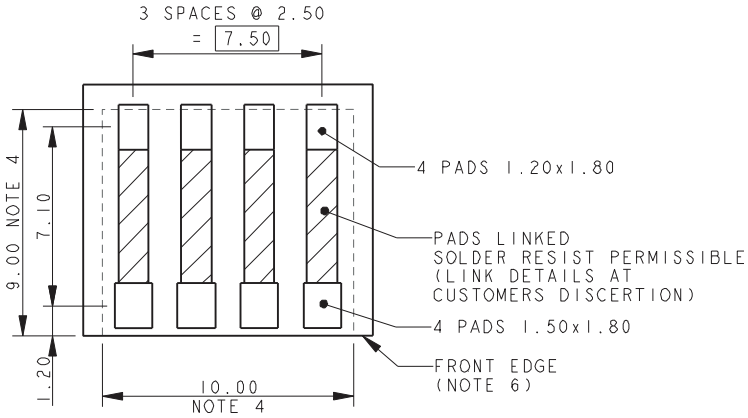

PACKING DETAILS

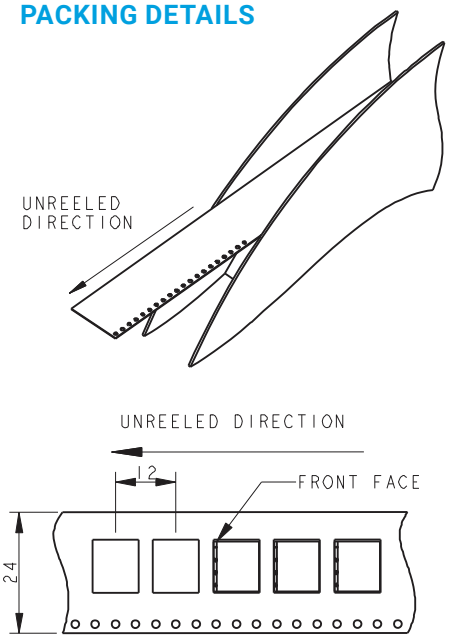

The Important Information/Disclaimer is incorporated in the catalog where these specifications came from or available online at www.avx.com/disclaimer/ by reference and should be reviewed in full before placing any order.

POKE-HOME: HORIZONTAL
18-26 AWG: 00-9276
6 Position

6 WAY WIRE TO BOARD CONNECTOR

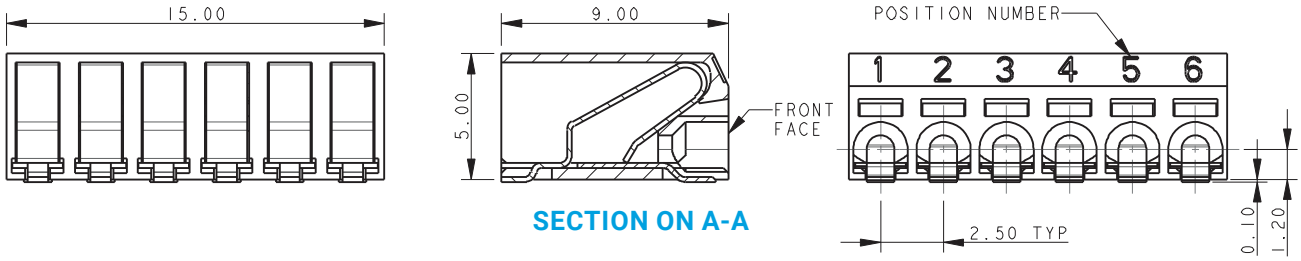

SECTION ON A-A

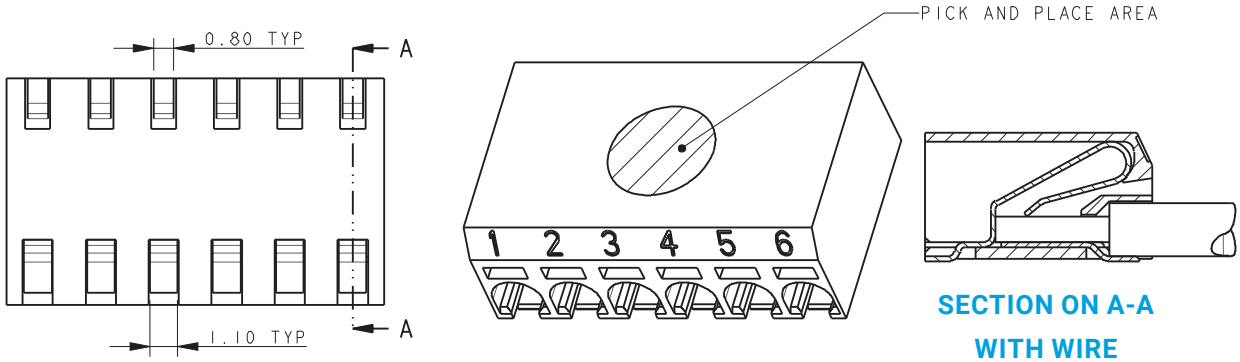

SECTION ON A-A
WITH WIRE

NOTES:
1. 9276 SIX WAY CONNECTOR, REFER TO ELCO SPECIFICATION 201-01-125 AND APPLICATION NOTES 201-01-127 FOR FURTHER DETAILS
2. INSULATOR MATERIAL: NYLON 46, GLASS FILLED, UL94 V-0, COLOR REFER TO PAGE 76.
3. CONTACT MATERIAL: COPPER ALLOY, 0.20MM THICK, TIN PLATED.
4. OUTLINE OF CONNECTOR.
5. WIRE ASSEMBLY / EXTRACTION, REFER TO PAGE 77.
6. FRONT FACE OF CONNECTOR CAN BE IN LINE WITH EDGE OF PCB.
7. PACKING TAPE AND REEL, QUANTITY 1000 PER REEL.

6 WAY PCB BOARD LAYOUT

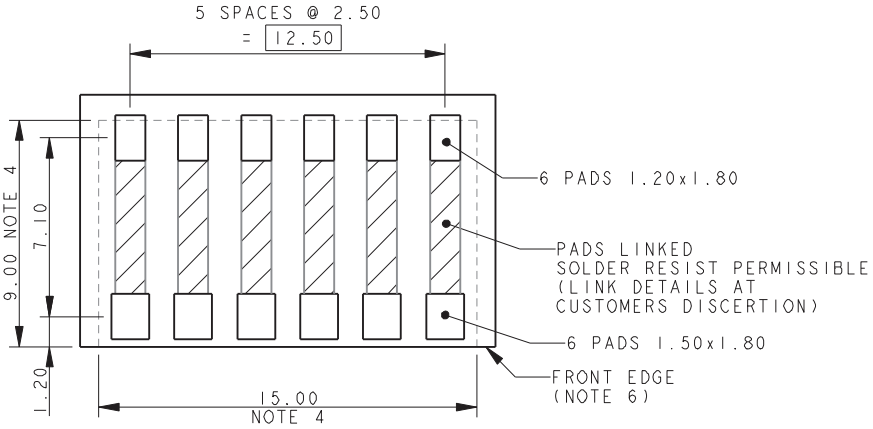

PACKING DETAILS

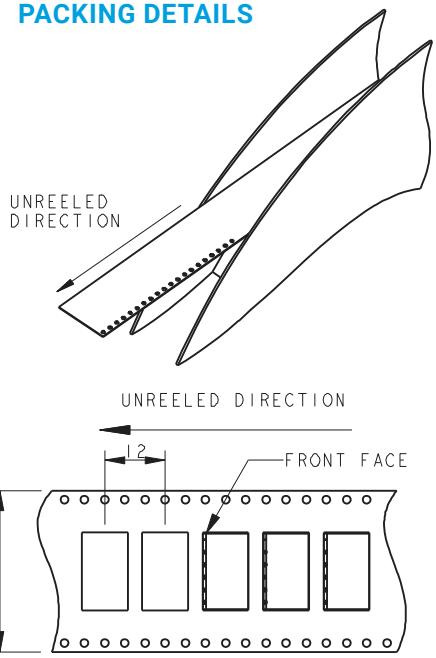

The Important Information/Disclaimer is incorporated in the catalog where these specifications came from or available online at www.avx.com/disclaimer/ by reference and should be reviewed in full before placing any order.

POKE-HOME: HORIZONTAL
18-26 AWG: 00-9276
8 Position

8 WAY WIRE TO BOARD CONNECTOR

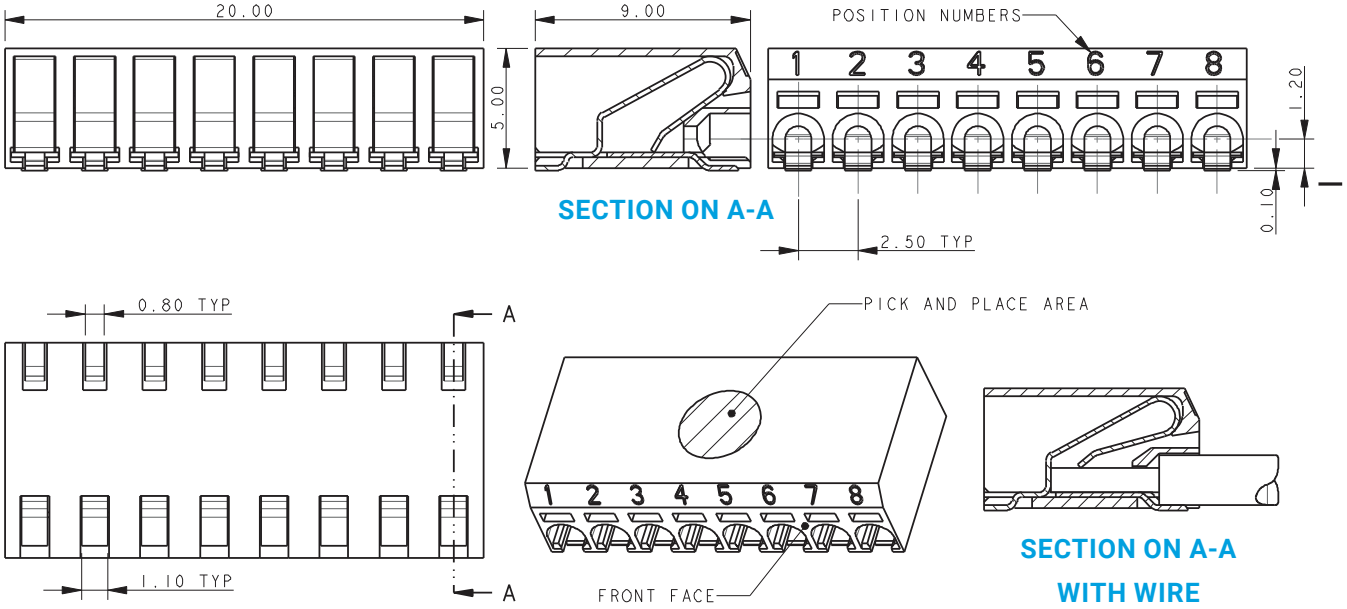

NOTES:
1. 9276 EIGHT WAY CONNECTOR, REFER TO ELCO SPECIFICATION 201-01- 125 AND APPLICATION NOTES 201-01-127 FOR FURTHER DETAILS
2. INSULATOR MATERIAL: NYLON 46, GLASS FILLED, UL94 V-0, COLOR REFER TO PAGE 76.
3. CONTACT MATERIAL: COPPER ALLOY, 0.20MM THICK, TIN PLATED.
4. OUTLINE OF CONNECTOR.
5. WIRE ASSEMBLY / EXTRACTION, REFER TO PAGE 77.
6. FRONT FACE OF CONNECTOR CAN BE IN LINE WITH EDGE OF PCB.
7. PACKING TAPE AND REEL, QUANTITY 1000 PER REEL.

PACKING DETAILS

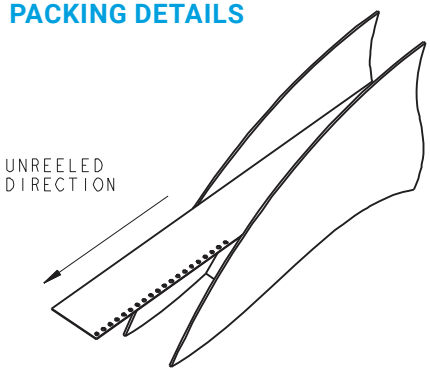

8 WAY PCB BOARD LAYOUT

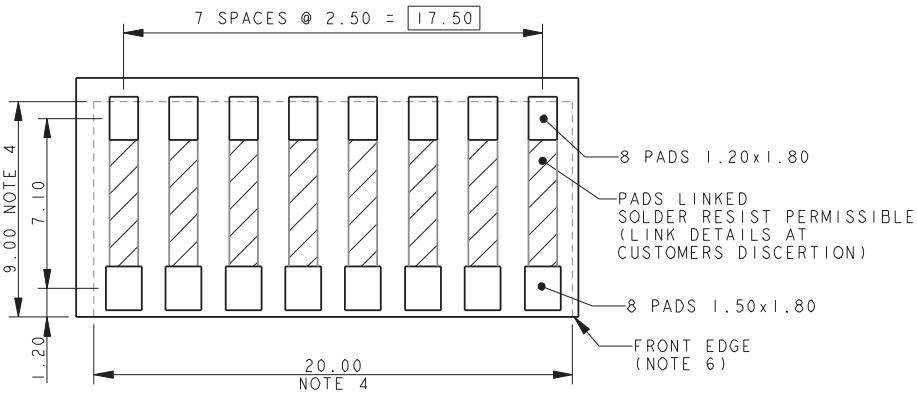

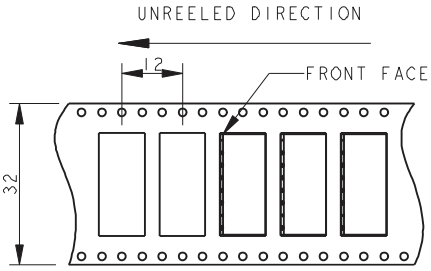

The Important Information/Disclaimer is incorporated in the catalog where these specifications came from or available online at www.avx.com/disclaimer/ by reference and should be reviewed in full before placing any order.

POKE-HOME: SINGLE HORIZONTAL CONTACT 12-28 AWG: 70-9296

General Information

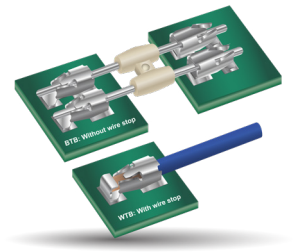

The widespread market adaptation of the KYOCERA AVX STRIPT™ contact systems continue to drive new product developments. The 70-9296 series of dual beam, boxed contacts provide a simple, yet reliable wire-to-board alternative to full sized 1pc and 2pc connector solutions. Contacts are SMT onto the PCB, then either solid or stranded wires can be stripped to length and inserted into the contact. Contacts are designed with dual beam high force contacts to maximize wire retention. Integral wire guides and stop assures proper positioning of the wire.

In this round of product expansion, the 2.5mm has been added to offer a new size when trying to maximize AWG and keep the smallest profile contact available is size critical applications. Additionally, this contact has been designed without a wire stop to facilitate solid pin insertion capabilities for board-to-board and module-to-module applications (see BTB Jumper data sheet for 109296001xxx906).

APPLICATIONS

- Industrial/Ruggedized Wire-to-Board applications
- Replace hard soldering of wire to a PCB
- Reference Product Specification 201-01-143
- Reference Application Notes 201-01-150
- Linear Board-to-Board capabilities with 109296001xxx906 jumpers

FEATURES AND BENEFITS

- Dual Beam box contact provides maximum mechanical stability and wire retention
- Tape and reel packaged for automated SMT placement
- Staged current rating based on AWG, maximum is 10A (12AWG)
- 2.5mm w/o wire stop allows for variable PCB mating tolerances in linear BTB applications

ELECTRICAL

- Voltage Rating: 300V
  Based on placement distance
- Current Rating: See Matrix Below

ENVIRONMENTAL

- Operating Temperature:
  -40°C to +125°C

MECHANICAL

- Contact Material: Phosphor Bronze
- Contact Plating: Pure Tin
- Durability 5 Cycles

HOW TO ORDER

70 — **Prefix**
70 = Contact

9296 — **Series**

001 — **Number of Ways**
001= 1

0XX — **Wire Gauge Size**

Code	Contact Size	Wire Gauge	Max Insulation	UL Approved E90723
017	1.7mm Contact	22-26 AWG Solid or Stranded	1.3mm Ø (See page 85)	Yes
002	2mm Contact	22-28 AWG Solid or Stranded	1.5mm Ø (See page 85)	Yes
025	2.5mm Contact	18-26 AWG Solid or Standed	Max 2mm Ø (See page 85)	Yes
003	3mm Contact	18-26 AWG Solid or Stranded	2.5mm Ø	Yes
004	4mm Contact	12-20 AWG Solid or Stranded	3.4mm Ø	Yes

0X6 — **Plating & Other Options**

Code	Wire Stop Variations	Plating
006	With wire stop	Pure tin all over
016*	Without wire stop	

*2mm, 2.5mm, and 3mm contact only

RoHS COMPLIANT

CURRENT RATING

Size	Part Number	12AWG	14AWG	16AWG	18AWG	20AWG	22AWG	24AWG	26AWG	28AWG
4mm	709296001004006	20A	16A	14A	12A	10A				
3mm	7092960010030x6				15A	14A	10A	9A	7A	
2.5mm	7092960010250x6				14A	12A	11A	9A	7A	
2mm	709296001002006						11A	9A	7A	6A
1.7mm	709296001017006						11A	9A	7A	6A

The Important Information/Disclaimer is incorporated in the catalog where these specifications came from or available online at www.avx.com/disclaimer/ by reference and should be reviewed in full before placing any order.

70-9296-001-017-006
1.7MM POKE HOME CONTACT

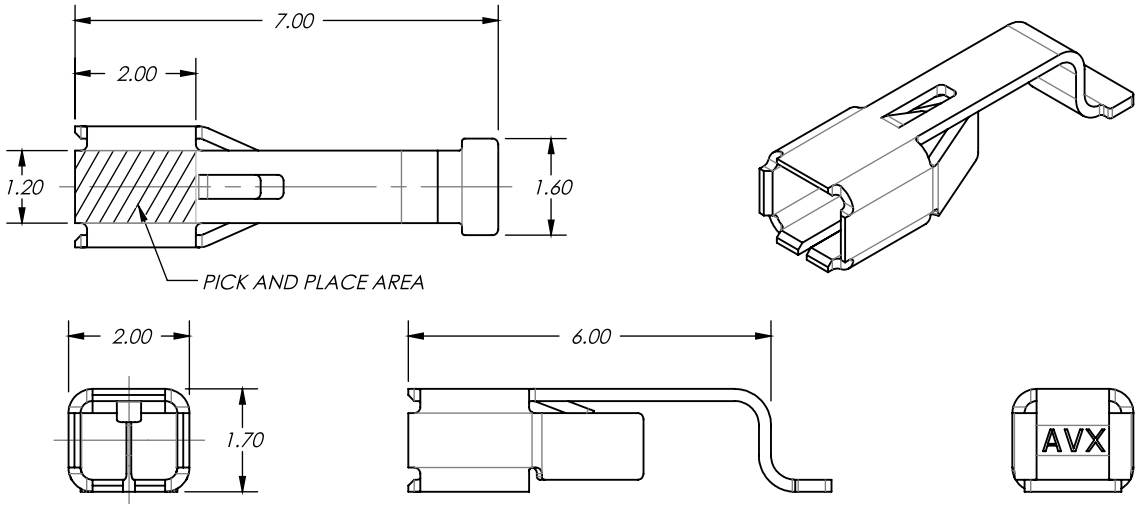

NOTES:
1. FOR FURTHER INFORMATION REFER TO ELCO SPECIFICATION 201-01-143 AND APPLICATION NOTES 201-01-150.
2. MATERIAL: TIN PLATED PHOSPHOR BRONZE.
3. PACKING IN TAPE AND REEL, 4000 PIECES PER REEL.
4. FOR WIRE TRIM DETAILS REFER TO PAGE 91.
5. AREA AVAILABLE FOR PICK AND PLACE.
6. UL REFERENCE 90723.
7. GENERAL TOLERANCE ±0.10.

SUGGESTED PCB LAYOUT

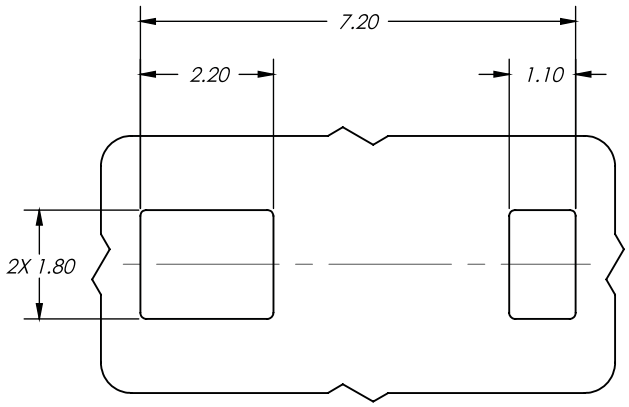

PACKING DETAILS

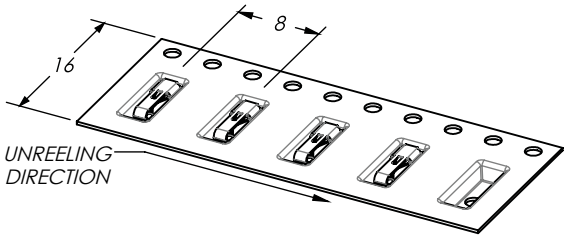

TAPE AND REEL PACKAGING
QUANTITY PER REEL: 4,000

The Important Information/Disclaimer is incorporated in the catalog where these specifications came from or available online at www.avx.com/disclaimer/ by reference and should be reviewed in full before placing any order.

70-9296-001-002-006

2MM POKE HOME CONTACT

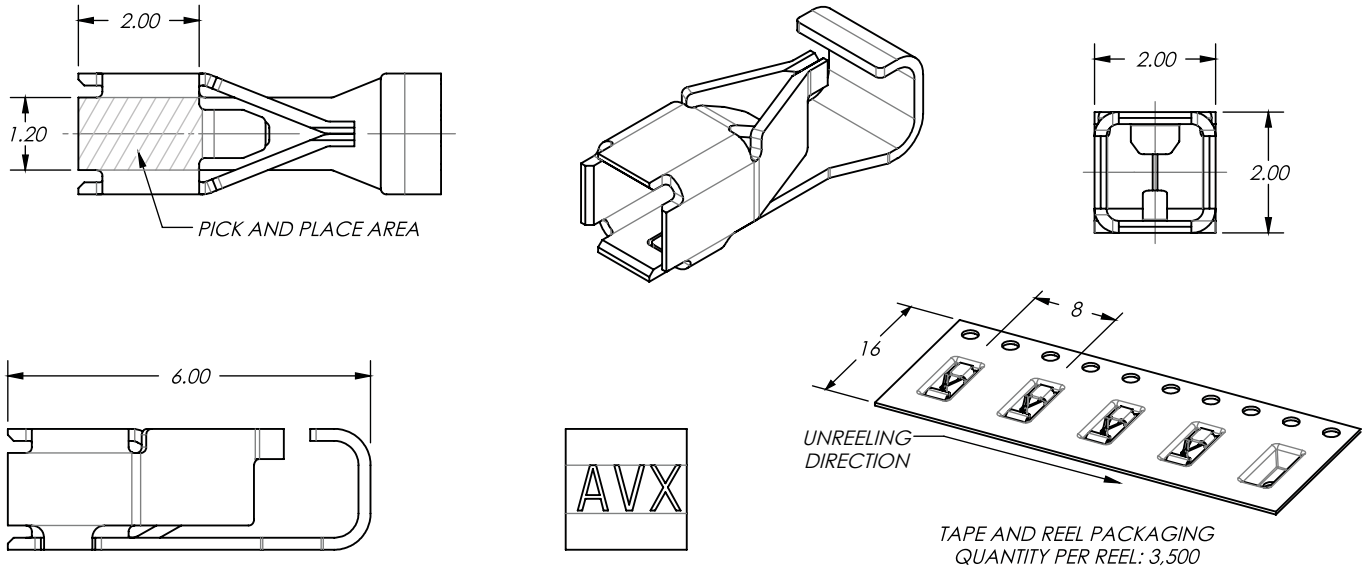

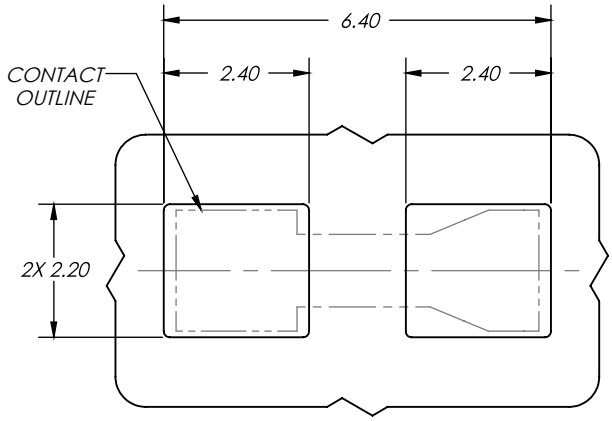

The Important Information/Disclaimer is incorporated in the catalog where these specifications came from or available online at www.avx.com/disclaimer/ by reference and should be reviewed in full before placing any order.

70-9296-001-025-006
2.5MM POKE HOME CONTACT

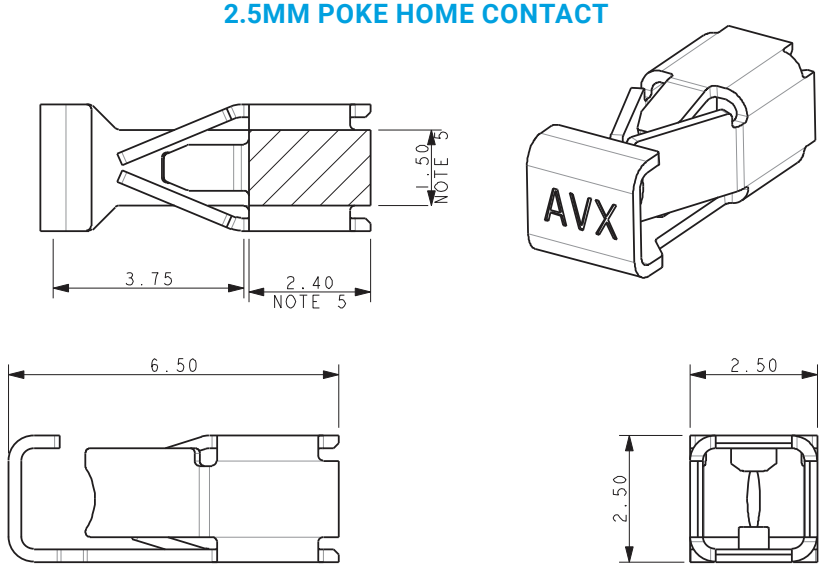

NOTES:
1. FOR FURTHER INFORMATION REFER TO ELCO SPECIFICATION 201-01-143 AND APPLICATION NOTES 201-01-150.
2. MATERIAL: TIN PLATED PHOSPHOR BRONZE.
3. PACKING IN TAPE AND REEL, 2500 PIECES PER REEL.
4. FOR WIRE TRIM DETAILS REFER TO PAGE 91.
5. AREA AVAILABLE FOR PICK AND PLACE.
6. UL REFERENCE 90723.
7. GENERAL TOLERANCE ±0.10.

SUGGESTED PCB LAYOUT

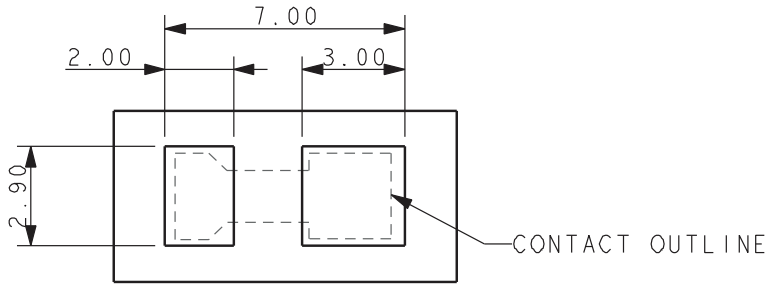

PACKING DETAILS

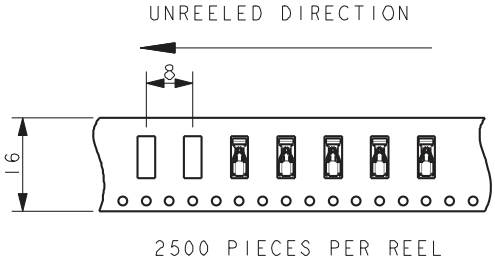

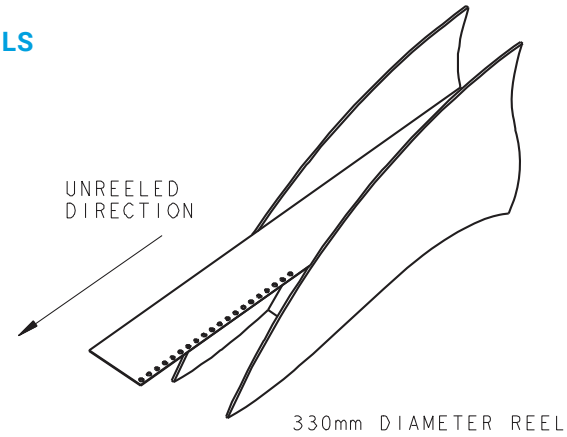

The Important Information/Disclaimer is incorporated in the catalog where these specifications came from or available online at www.avx.com/disclaimer/ by reference and should be reviewed in full before placing any order.

70-9296-001-025-016
2.5MM POKE HOME CONTACT – NO STOP

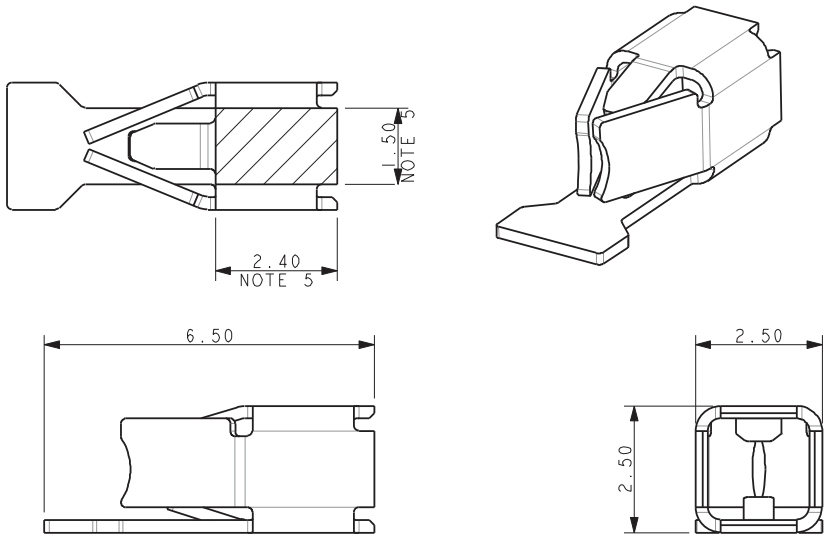

NOTES:
1. FOR FURTHER INFORMATION REFER TO ELCO SPECIFICATION 201-01-143 AND APPLICATION NOTES 201-01-150.
2. MATERIAL: TIN PLATED PHOSPHOR BRONZE.
3. PACKING IN TAPE AND REEL, 2500 PIECES PER REEL.
4. FOR WIRE TRIM DETAILS REFER TO PAGE 91.
5. AREA AVAILABLE FOR PICK AND PLACE.
6. UL REFERENCE 90723.
7. GENERAL TOLERANCE ±0.10.

SUGGESTED PCB LAYOUT

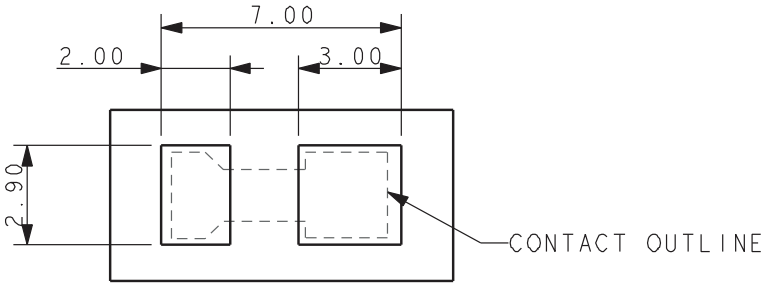

PACKING DETAILS

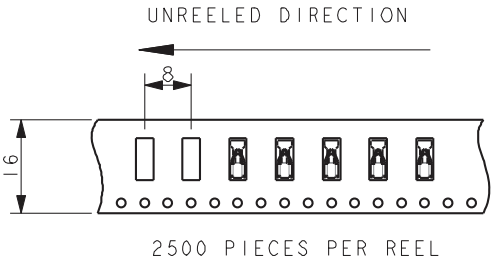

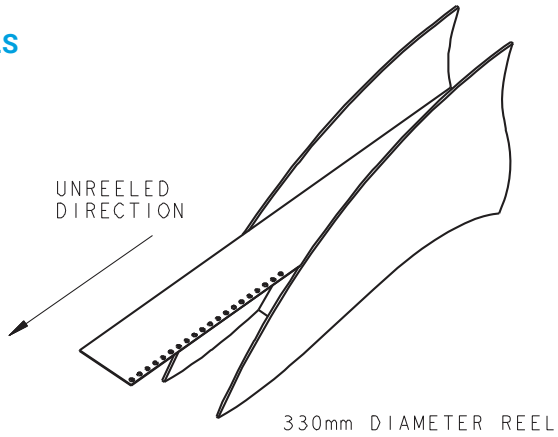

The Important Information/Disclaimer is incorporated in the catalog where these specifications came from or available online at www.avx.com/disclaimer/ by reference and should be reviewed in full before placing any order.

POKE-HOME: SINGLE HORIZONTAL CONTACT
12-28 AWG: 70-9296

3mm

70-9296-001-003-006
3MM POKE HOME CONTACT

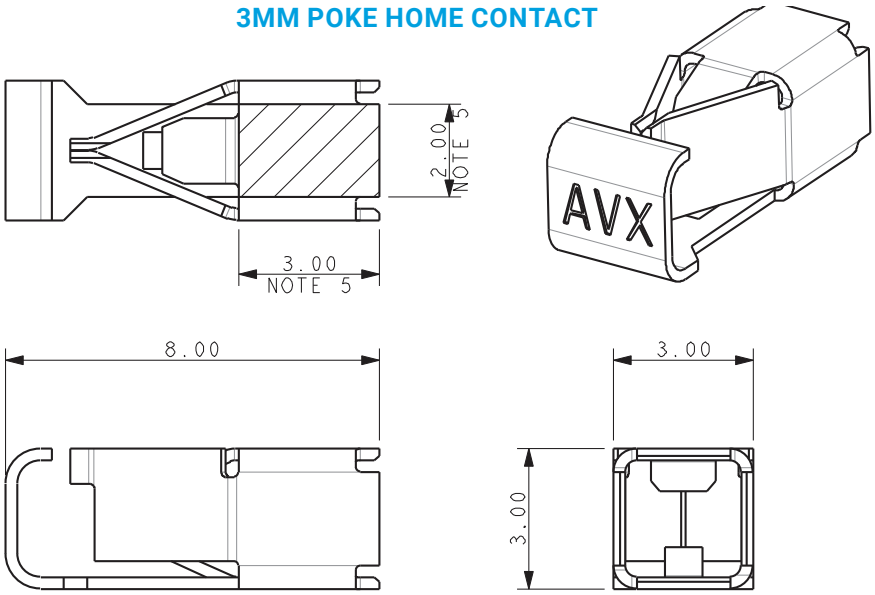

NOTES:
1. FOR FURTHER INFORMATION REFER TO ELCO SPECIFICATION 201-01-143 AND APPLICATION NOTES 201-01-150.
2. MATERIAL: TIN PLATED PHOSPHOR BRONZE.
3. PACKING IN TAPE AND REEL, 2500 PIECES PER REEL.
4. FOR WIRE TRIM DETAILS REFER TO PAGE 91.
5. AREA AVAILABLE FOR PICK AND PLACE.
6. UL REFERENCE 90723.
7. GENERAL TOLERANCE ±0.10.

SUGGESTED PCB LAYOUT

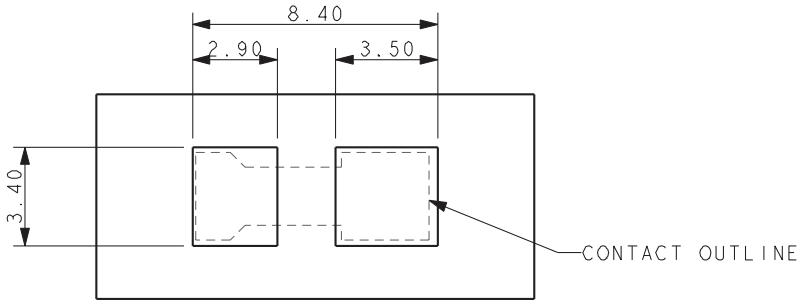

PACKING DETAILS

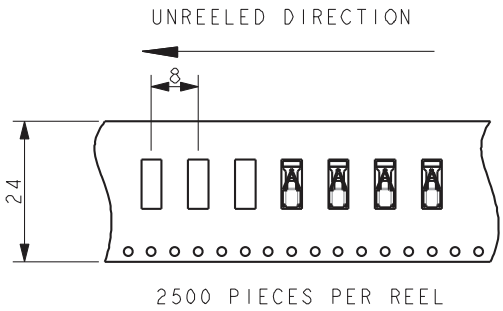

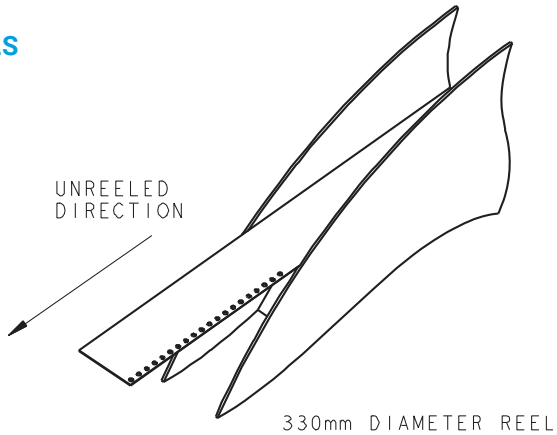

The Important Information/Disclaimer is incorporated in the catalog where these specifications came from or available online at www.avx.com/disclaimer/ by reference and should be reviewed in full before placing any order.

70-9296-001-004-006
4MM POKE HOME CONTACT

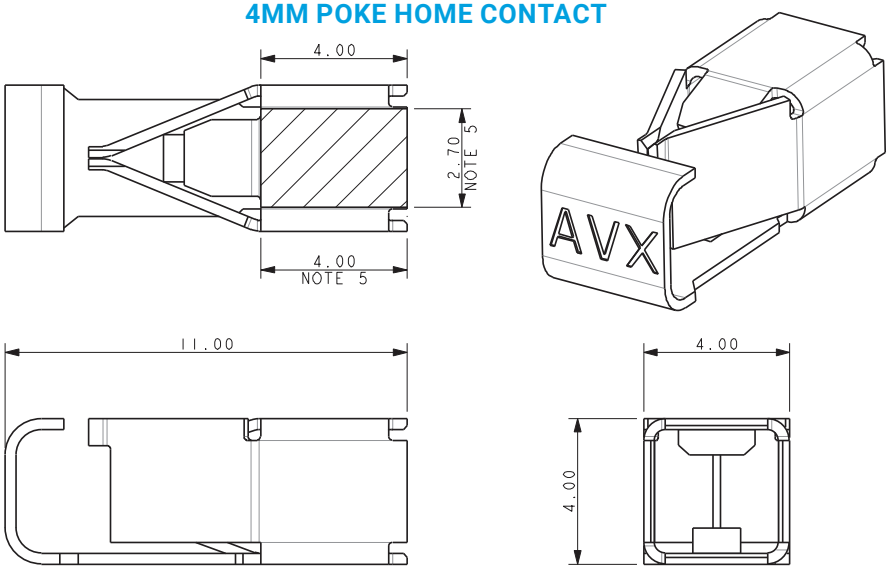

NOTES:
1. FOR FURTHER INFORMATION REFER TO ELCO SPECIFICATION 201-01-143 AND APPLICATION NOTES 201-01-150.
2. MATERIAL: TIN PLATED PHOSPHOR BRONZE.
3. PACKING IN TAPE AND REEL, 2000 PIECES PER REEL.
4. FOR WIRE TRIM DETAILS REFER TO PAGE 91.
5. AREA AVAILABLE FOR PICK AND PLACE.
6. UL REFERENCE 90723.
7. GENERAL TOLERANCE ±0.10.

SUGGESTED PCB LAYOUT

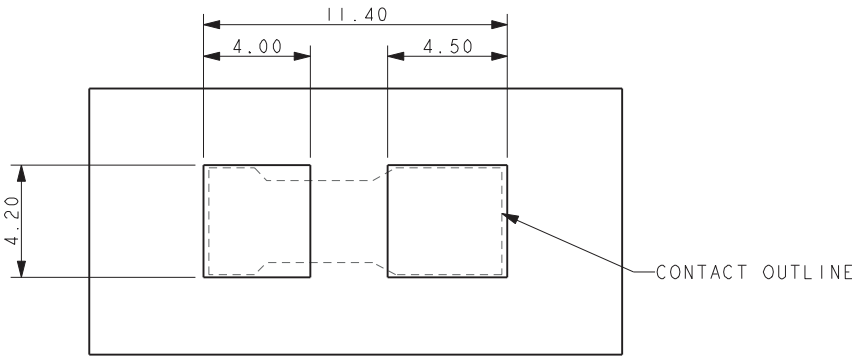

PACKING DETAILS

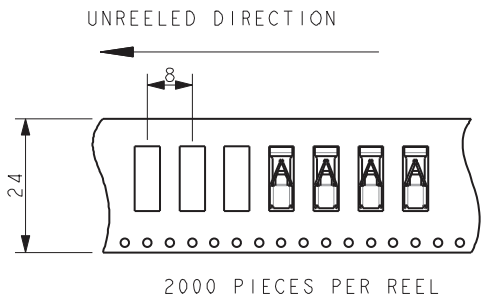

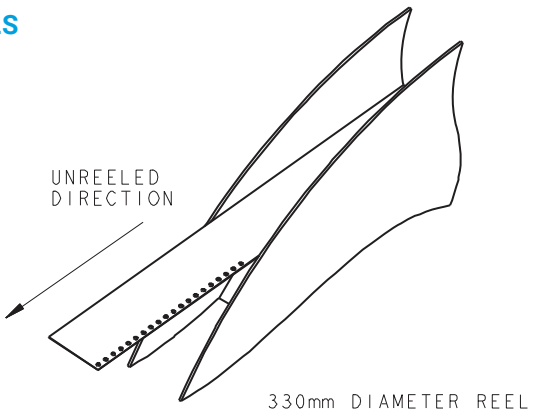

The Important Information/Disclaimer is incorporated in the catalog where these specifications came from or available online at www.avx.com/disclaimer/ by reference and should be reviewed in full before placing any order.

CONNECTOR ASSEMBLY

FOR FULL DETAILS REFER TO APPLICATION NOTES 201-01-150

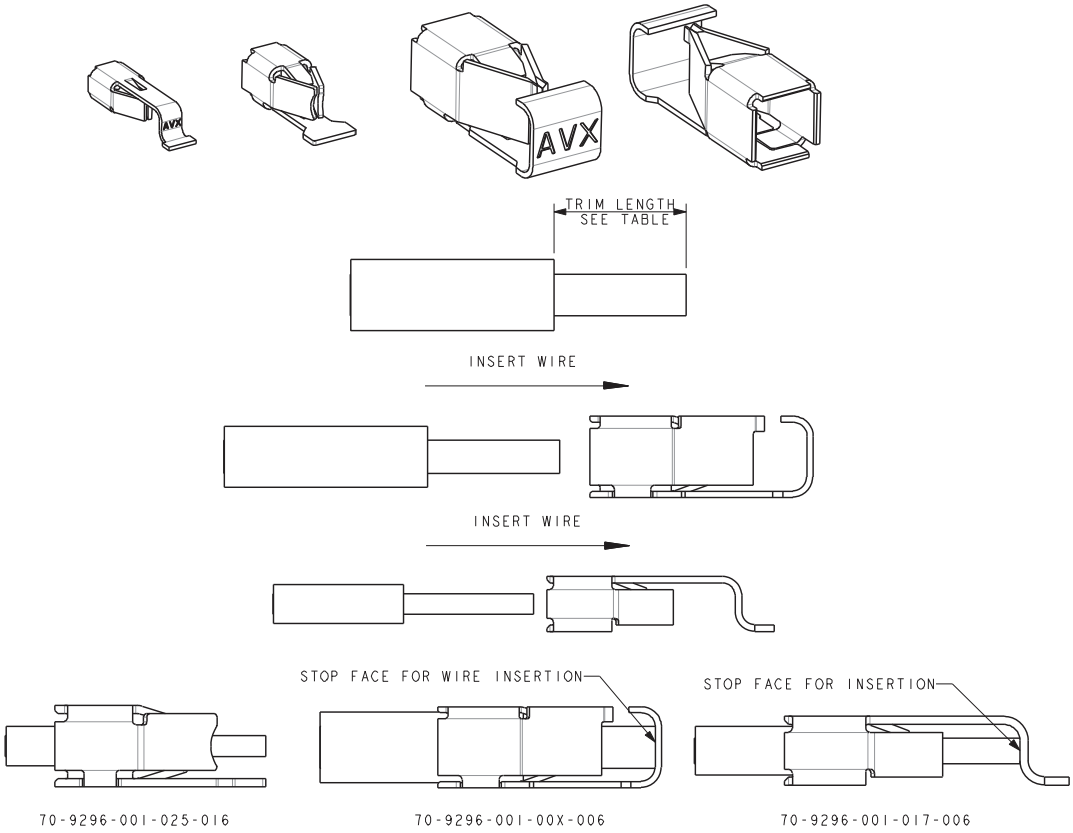

CONTACT	WIRE SIZE	INSULATOR DIAMETER	TRIM LENGTH
70-9296-001-004-006	12AWG and 14AWG	Max 3.4mm	6.5 ± 0.5mm
70-9296-001-004-006	16AWG, 18AWG and 20AWG	Max 2.5mm	5.5 ± 0.5mm
70-9296-001-003-006	18AWG to 26AWG	Max 2.5mm	4.5 ± 0.5mm
70-9296-001-025-006	20AWG to 26AWG	Max 2.0mm	3.5 ± 0.5mm
70-9296-001-025-006	20AWG to 26AWG	2.0mm to 2.50mm	6.0 ± 0.5mm*
70-9296-001-025-016	20AWG to 26AWG	Max 2.0mm	3.0mm Minimum – No Stop on Contact
70-9296-001-025-016	20AWG to 26AWG	Max 2.0mm	5.5mm Minimum – No Stop on Contact
70-9296-001-002-006	22AWG to 28AWG	Max 1.5mm	3.5 ± 0.5mm
70-9296-001-002-006	22AWG to 28AWG	1.5mm to 2.0mm	5.5 ± 0.5mm*
70-9296-001-017-006	22AWG to 26AWG	Max 1.3mm	4.0 ± 0.5mm
70-9296-001-017-006	22AWG to 26AWG	1.3mm to 1.7mm	6.0 ± 0.5mm*

* Wire insulation butts on end of contact

CONTACT OPENING TOOL

06-9296-7001-01-000

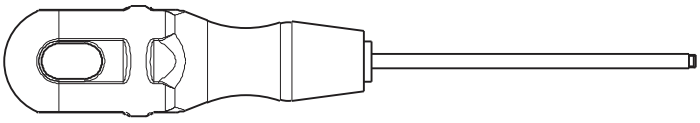

TOOL TO OPEN THE CONTACT TO INSERT/WITHDRAW WIRE.
REFER TO APPLICATION NOTES 201-01-150.

The Important Information/Disclaimer is incorporated in the catalog where these specifications came from or available online at www.avx.com/disclaimer/ by reference and should be reviewed in full before placing any order.

POKE-HOME: VERTICAL TOP ENTRY 18-26 AWG: 00-9296

General Information

KYOCERA AVX continues to develop innovative connectors for the industrial electronics market that provide significant benefits over existing, outdated connector solutions. Listening to the design engineering community, there are ongoing applications where they cannot find an off-the-shelf solution that will satisfy a high percentage of the projects configuration, performance and cost goals.

The newest addition to KYOCERA AVX's broadening line of Wire-to-Board (WTB) connectors offers a cost effective, single Poke-Home connector solution that will meet the cost and performance targets in demanding, yet user friendly applications. At the heart of the connector is the industry proven dual tine, 3mm high spring force box contact that has been on the market as a standalone horizontal contact only solution.

The new SMT vertical top entry connector allows for 18AWG to 26AWG wires to be simply stripped and inserted into the connector body at 180 degree orientation to the top side of the PCB. This single connector will replace existing 2-Piece WTB solutions where a header is soldered onto the PCB and a secondary crimp-to-wire receptacle assembly is plugged in. Available in 1-6 positions, each connector will accept the entire wire gauge range for either solid or stranded wires at varying current ratings supported by each wire size. Once inserted, wires can easily be removed or replaced by twisting/unscrewing or by using a small blade extraction tool.

APPLICATIONS

- Industrial/Ruggedized Wire-to-Board applications
- Replace hard soldering of wire to a PCB
- Replace costly 2-Piece header and receptacle products
- Reference Product Specification 201-01-151
- Reference Application Notes 201-01-152

FEATURES AND BENEFITS

- Dual Beam box contact provides maximum mechanical stability and wire retention
- Tape and reel packaged for automated SMT placement
- Will accept either solid or stranded wire, 18-26AWG, plated or un-plated wires
- Simple strip and insert for wire loading, with easy twist and pull for wire removal

ELECTRICAL

- Voltage Rating: 600 VAC 1 way; 300 VAC 2 - 6 way
- Current Rating: See matrix below

ENVIRONMENTAL

- Operating Temperature: -40ºC to +125ºC

MECHANICAL

- Contact Material: Copper Alloy
- Contact Plating: Tin over Nickel
- Durability: 5 Cycles

HOW TO ORDER

00 — **Prefix**

9296 — **Series**

001 — **Number of Ways**
001 = 1
002 = 2
003 = 3
004 = 4
005 = 5
006 = 6

553 — **Wire Gauge Size**

Code	Accepted Wire Gauge	Max Insulation
553	18 – 26 AWG Solid or Stranded	2.2mm

X — **Insulator Color**
All Sizes
9 = UL White (Standard)
8 = UL Black (Special Order)

One Way Only (Special Order)
2 = UL Brown
3 = UL Blue
4 = UL Yellow
5 = UL Red
6 = UL Green
7 = UL Orange

06 — **Plating Options**
06 = Tin Plated

RoHS COMPLIANT

CURRENT RATING

18AWG	20AWG	22AWG	24AWG	26AWG
7A	6A	5A	4A	3A

Certification: UL File #E90723

The Important Information/Disclaimer is incorporated in the catalog where these specifications came from or available online at www.avx.com/disclaimer/ by reference and should be reviewed in full before placing any order.

9296 TOP MOUNT POKE HOME CONNECTOR
1 WAY

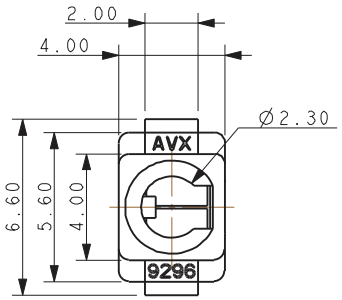

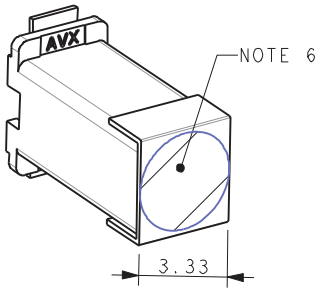

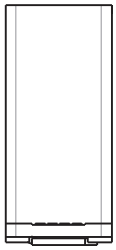

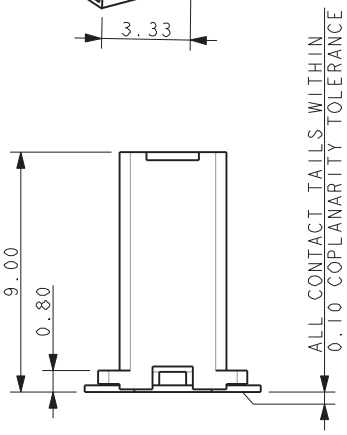

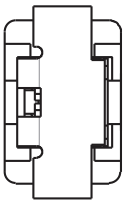

NOTES:
1. TOP MOUNT 1 WAY POKE HOME CONNECTOR. FOR FURTHER DETAILS REFER TO PRODUCT SPECIFICATION 201-01-151 AND APPLICATION NOTES 201-01-152.
2. SUITABLE FOR WIRES 18AWG TO 26AWG. MAXIMUM INSULATION 2.20MM DIAMETER.
3. INSULATOR: NYLON 46, GLASS FILLED, UL94 V-0. COLOR REFER TO PAGE 92.
4. CONTACT: TIN PLATE COPPER ALLOY.
5. PACKING IN TAPE AND REEL. QTY PER REEL 400, 330MM REEL.
6. CAPTON TAPE TO AID PICK AND PLACE, 4MM DIAMETER MAX AVAILABLE.
7. CONNECTOR OUTLINE.
8. GENERAL TOLERANCE ±0.20.
9. UL REFERENCE E90723.

SUGGESTED PCB LAYOUT

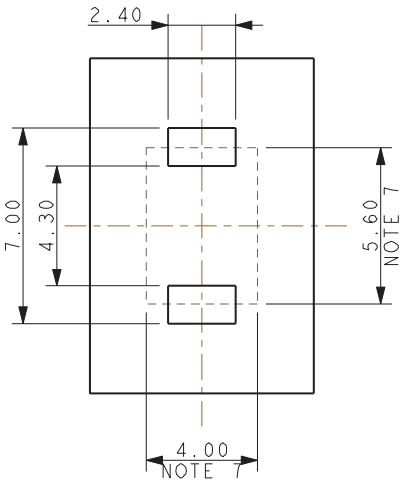

PACKING DETAILS

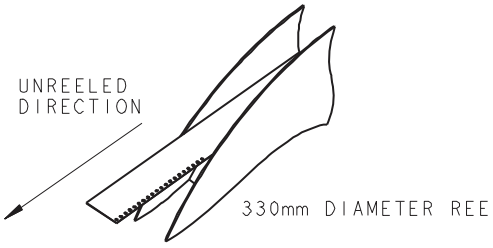

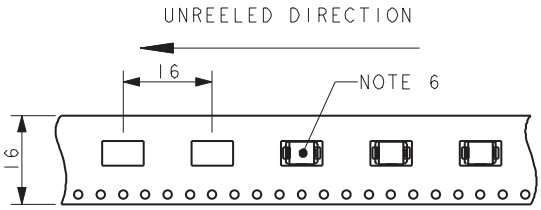

QUANTITY PER REEL 400

The Important Information/Disclaimer is incorporated in the catalog where these specifications came from or available online at www.avx.com/disclaimer/ by reference and should be reviewed in full before placing any order.

9296 TOP MOUNT POKE HOME CONNECTOR
2 WAY

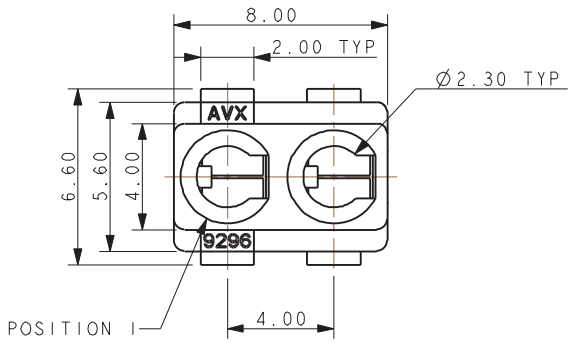

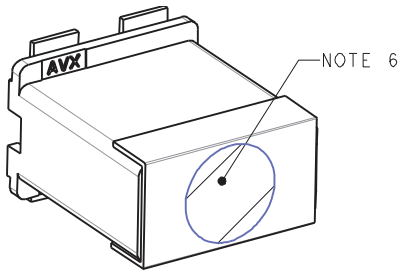

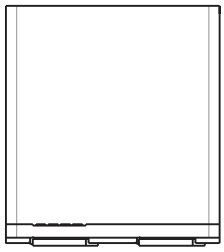

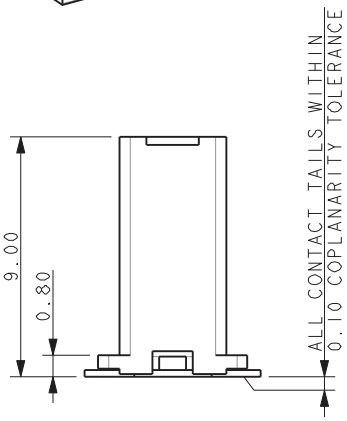

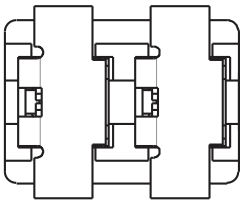

NOTES:
1. TOP MOUNT 2 WAY POKE HOME CONNECTOR. FOR FURTHER DETAILS REFER TO PRODUCT SPECIFICATION 201-01-151 AND APPLICATION NOTES 201-01-152.
2. SUITABLE FOR WIRES 18AWG TO 26AWG. MAXIMUM INSULATION 2.20MM DIAMETER.
3. INSULATOR: NYLON 46, GLASS FILLED, UL94 V-0. COLOR REFER TO PAGE 92.
4. CONTACT: TIN PLATE COPPER ALLOY.
5. PACKING IN TAPE AND REEL. QTY PER REEL 400, 330MM REEL.
6. CAPTON TAPE TO AID PICK AND PLACE, 4MM DIAMETER MAX AVAILABLE.
7. CONNECTOR OUTLINE.
8. GENERAL TOLERANCE ±0.20.
9. UL REFERENCE E90723.

SUGGESTED PCB LAYOUT

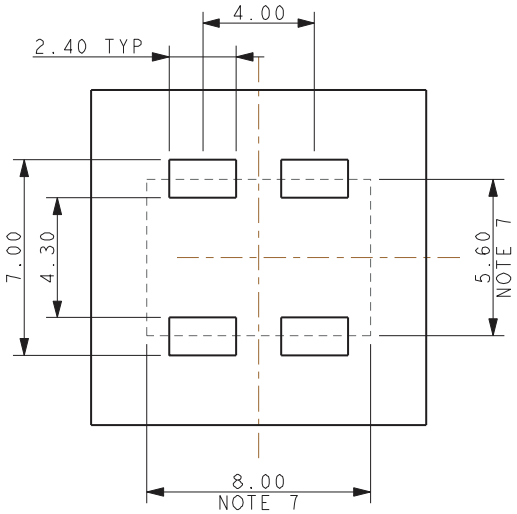

PACKING DETAILS

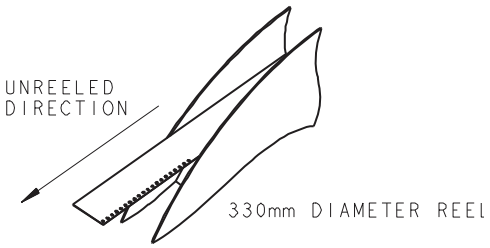

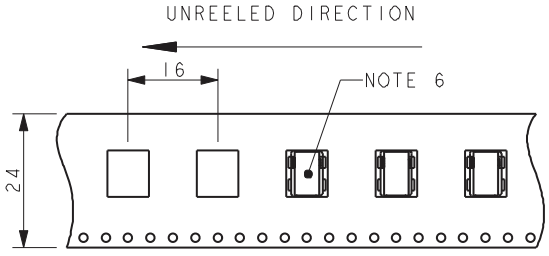

QUANTITY PER REEL 400

The Important Information/Disclaimer is incorporated in the catalog where these specifications came from or available online at www.avx.com/disclaimer/ by reference and should be reviewed in full before placing any order.

9296 TOP MOUNT POKE HOME CONNECTOR
3 WAY

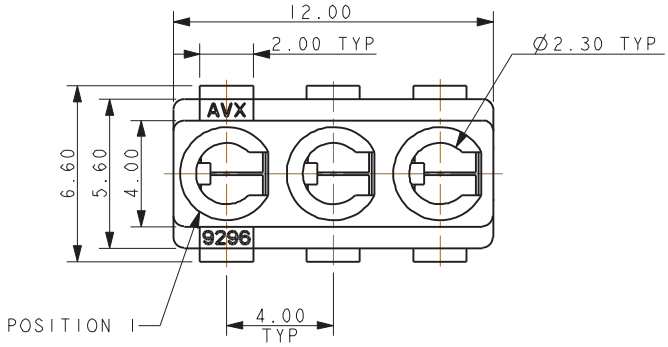

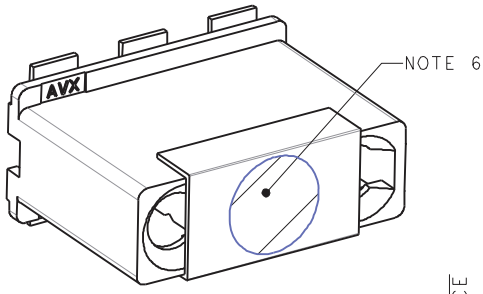

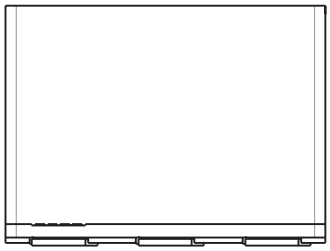

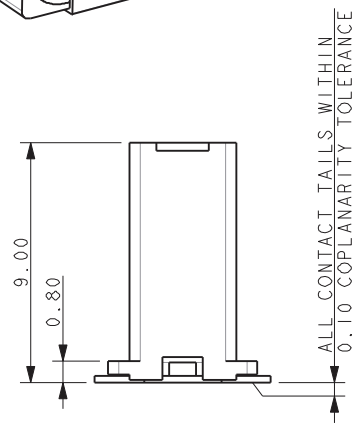

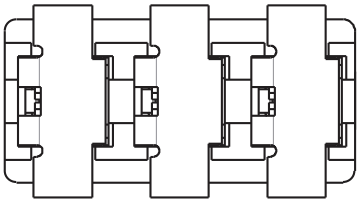

NOTES:
1. TOP MOUNT 3 WAY POKE HOME CONNECTOR. FOR FURTHER DETAILS REFER TO PRODUCT SPECIFICATION 201-01-151 AND APPLICATION NOTES 201-01-152.
2. SUITABLE FOR WIRES 18AWG TO 26AWG. MAXIMUM INSULATION 2.20MM DIAMETER.
3. INSULATOR: NYLON 46, GLASS FILLED, UL94 V-0. COLOR REFER TO PAGE 92.
4. CONTACT: TIN PLATE COPPER ALLOY.
5. PACKING IN TAPE AND REEL. QTY PER REEL 400, 330MM REEL.
6. CAPTON TAPE TO AID PICK AND PLACE, 4MM DIAMETER MAX AVAILABLE.
7. CONNECTOR OUTLINE.
8. GENERAL TOLERANCE ±0.20.
9. UL REFERENCE E90723.

SUGGESTED PCB LAYOUT

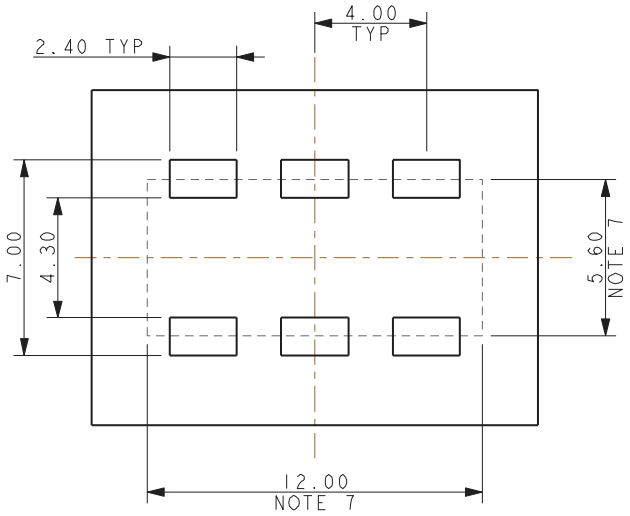

PACKING DETAILS

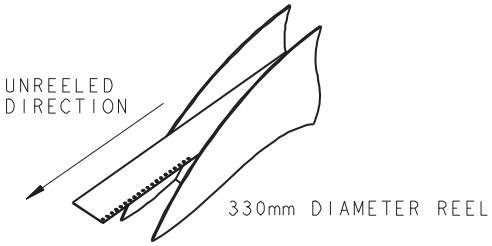

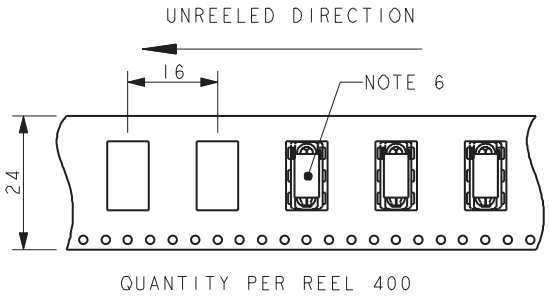

The Important Information/Disclaimer is incorporated in the catalog where these specifications came from or available online at www.avx.com/disclaimer/ by reference and should be reviewed in full before placing any order.

9296 TOP MOUNT POKE HOME CONNECTOR
4 WAY

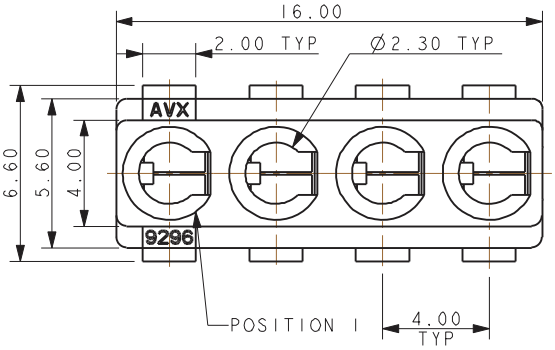

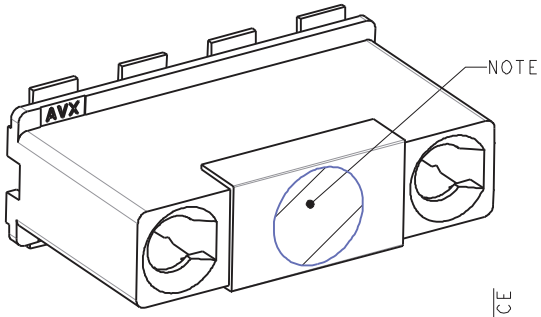

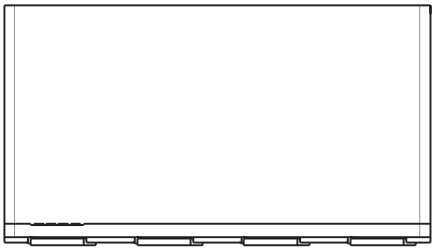

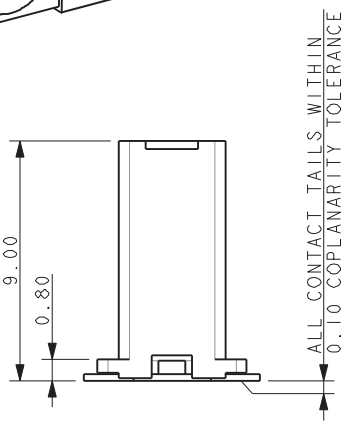

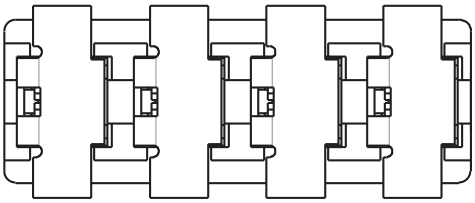

NOTES:
1. TOP MOUNT 4 WAY POKE HOME CONNECTOR. FOR FURTHER DETAILS REFER TO PRODUCT SPECIFICATION 201-01-151 AND APPLICATION NOTES 201-01-152.
2. SUITABLE FOR WIRES 18AWG TO 26AWG. MAXIMUM INSULATION 2.20MM DIAMETER.
3. INSULATOR: NYLON 46, GLASS FILLED, UL94 V-0. COLOR REFER TO PAGE 92.
4. CONTACT: TIN PLATE COPPER ALLOY.
5. PACKING IN TAPE AND REEL. QTY PER REEL 400, 330MM REEL.
6. CAPTON TAPE TO AID PICK AND PLACE, 4MM DIAMETER MAX AVAILABLE.
7. CONNECTOR OUTLINE.
8. GENERAL TOLERANCE ±0.20.
9. UL REFERENCE E90723.

SUGGESTED PCB LAYOUT

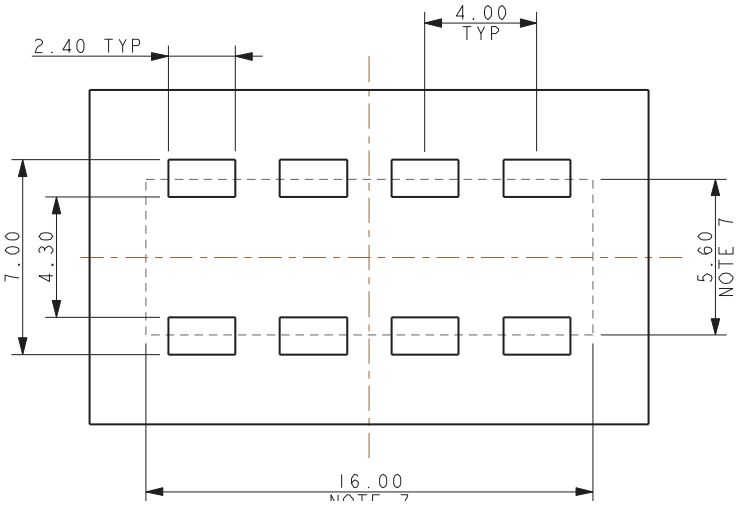

PACKING DETAILS

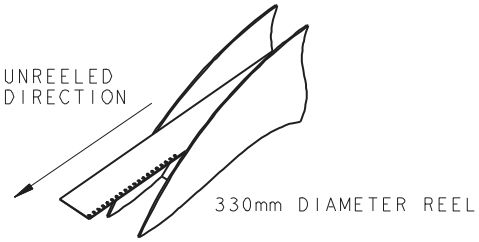

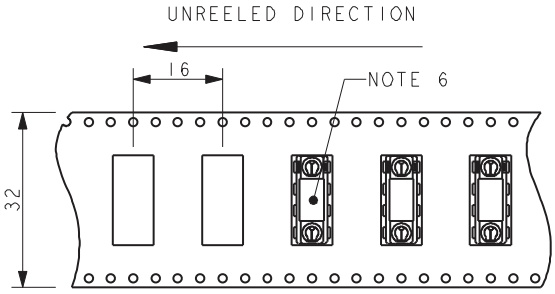

The Important Information/Disclaimer is incorporated in the catalog where these specifications came from or available online at www.avx.com/disclaimer/ by reference and should be reviewed in full before placing any order.

POKE-HOME: VERTICAL TOP ENTRY
18-26 AWG: 00-9296
5 Position

9296 TOP MOUNT POKE HOME CONNECTOR
5 WAY

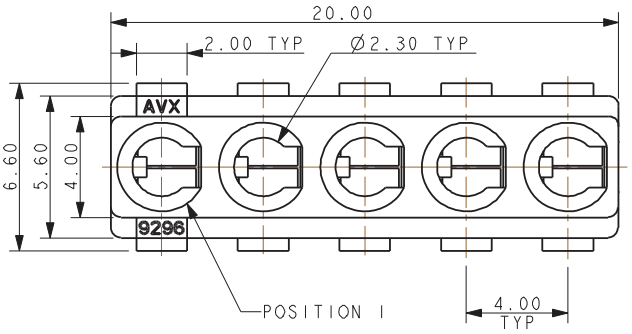

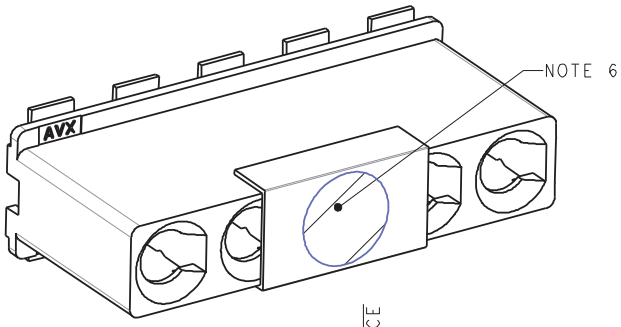

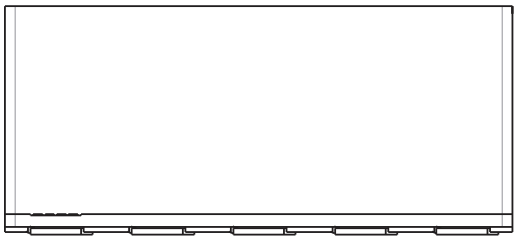

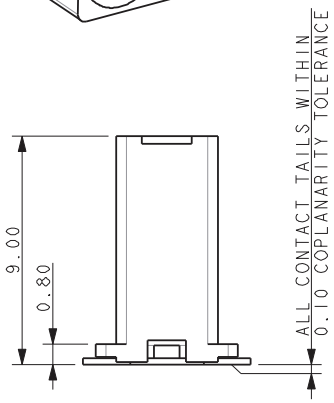

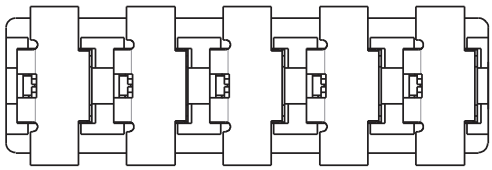

NOTES:
1. TOP MOUNT 5 WAY POKE HOME CONNECTOR. FOR FURTHER DETAILS REFER TO PRODUCT SPECIFICATION 201-01-151 AND APPLICATION NOTES 201-01-152.
2. SUITABLE FOR WIRES 18AWG TO 26AWG. MAXIMUM INSULATION 2.20MM DIAMETER.
3. INSULATOR: NYLON 46, GLASS FILLED, UL94 V-0. COLOR REFER TO PAGE 92.
4. CONTACT: TIN PLATE COPPER ALLOY.
5. PACKING IN TAPE AND REEL. QTY PER REEL 400, 330MM REEL.
6. CAPTON TAPE TO AID PICK AND PLACE, 4MM DIAMETER MAX AVAILABLE.
7. CONNECTOR OUTLINE.
8. GENERAL TOLERANCE ±0.20.
9. UL REFERENCE E90723.

SUGGESTED PCB LAYOUT

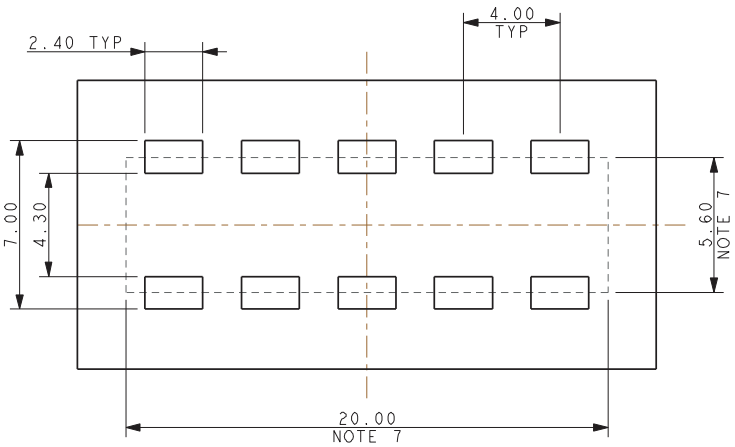

PACKING DETAILS

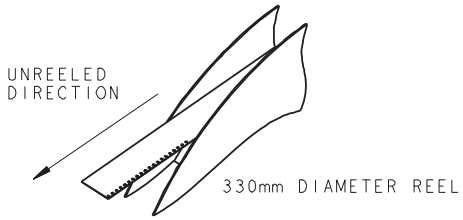

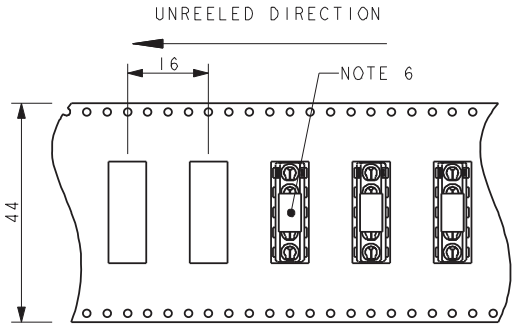

QUANTITY PER REEL 400

The Important Information/Disclaimer is incorporated in the catalog where these specifications came from or available online at www.avx.com/disclaimer/ by reference and should be reviewed in full before placing any order.

9296 TOP MOUNT POKE HOME CONNECTOR
6 WAY

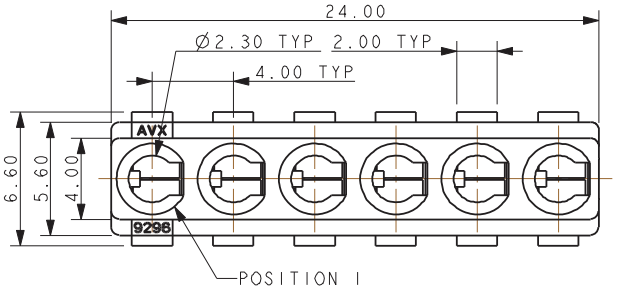

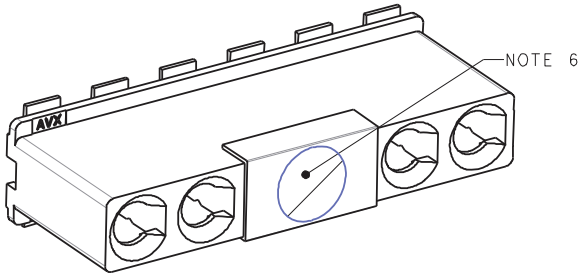

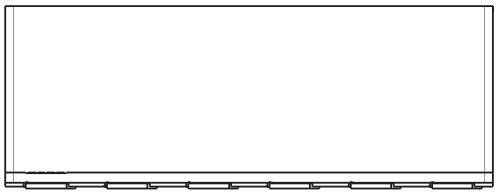

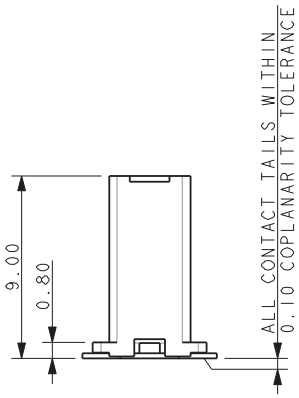

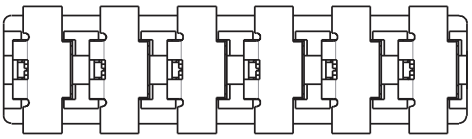

NOTES:
1. TOP MOUNT 6 WAY POKE HOME CONNECTOR. FOR FURTHER DETAILS REFER TO PRODUCT SPECIFICATION 201-01-151 AND APPLICATION NOTES 201-01-152.
2. SUITABLE FOR WIRES 18AWG TO 26AWG. MAXIMUM INSULATION 2.20MM DIAMETER.
3. INSULATOR: NYLON 46, GLASS FILLED, UL94 V-0. COLOR REFER TO PAGE 92.
4. CONTACT: TIN PLATE COPPER ALLOY.
5. PACKING IN TAPE AND REEL. QTY PER REEL 400, 330MM REEL.
6. CAPTON TAPE TO AID PICK AND PLACE, 4MM DIAMETER MAX AVAILABLE.
7. CONNECTOR OUTLINE.
8. GENERAL TOLERANCE ±0.20.
9. UL REFERENCE E90723.

SUGGESTED PCB LAYOUT

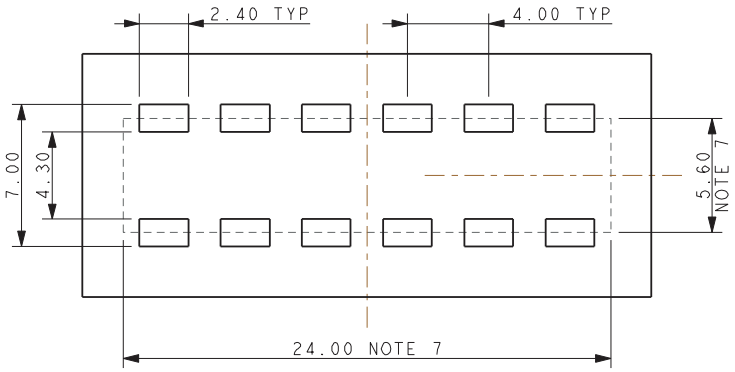

PACKING DETAILS

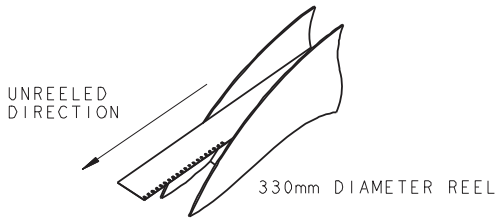

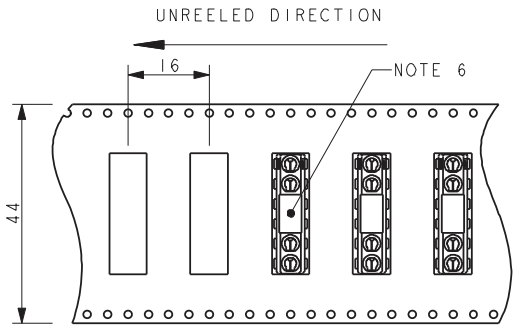

QUANTITY PER REEL 400

The Important Information/Disclaimer is incorporated in the catalog where these specifications came from or available online at www.avx.com/disclaimer/ by reference and should be reviewed in full before placing any order.

9296 TOP MOUNT POKE HOME CONNECTOR ASSEMBLY

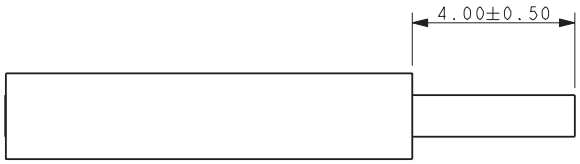

WIRE STRIP LENGTH

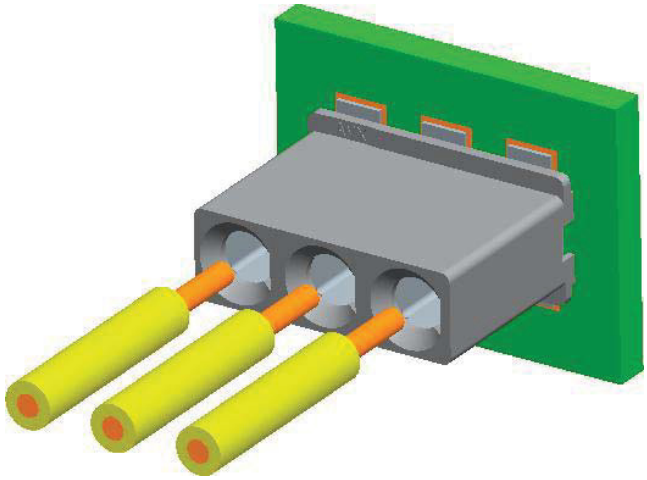

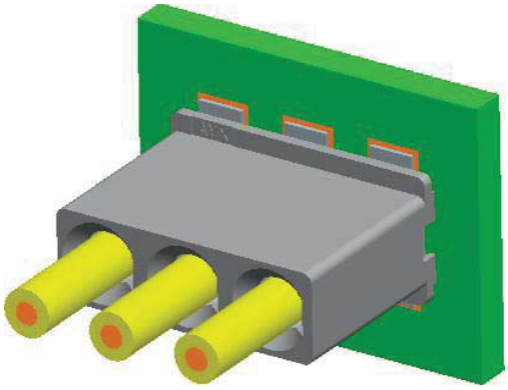

Refer to application notes 201-01-152 for full assembly procedure.

9296 TOP MOUNT POKE HOME CONNECTOR WIRE EXTRACTION TOOL

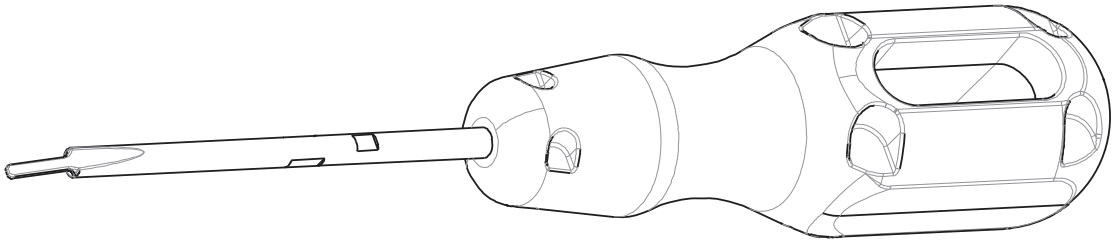

06-9296-7003-01-000

Refer to application notes 201-01-152 for full wire extraction procedure.

The Important Information/Disclaimer is incorporated in the catalog where these specifications came from or available online at www.avx.com/disclaimer/ by reference and should be reviewed in full before placing any order.

POKE-HOME: INVERTED THRU BOARD 18-26 AWG: 00-9296

General Information

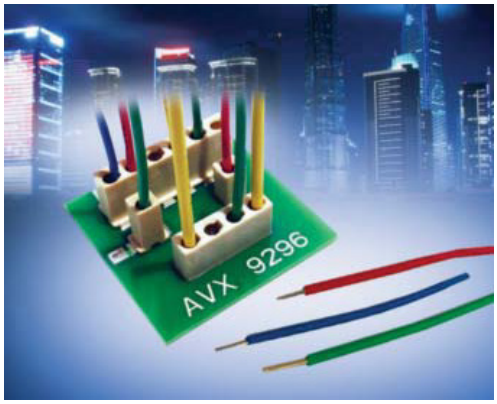

KYOCERA AVX continues to develop innovative connectors for the industrial electronics market that provide significant benefits over existing, outdated connector solutions. Listening to the design engineering community, there are ongoing applications where they cannot find an off-the-shelf solution that will satisfy a high percentage of the projects configuration, performance and cost goals.

The newest addition to KYOCERA AVX's broadening line of Wire-to-Board (WTB) connectors offers a cost effective, single Poke-Home connector solution that will meet the cost and performance targets in demanding, yet user friendly applications. At the heart of the connector is the industry proven dual tine, 3mm high spring force box contact that has been on the market as a standalone horizontal contact only solution.

The new SMT vertical through board connector allows for 18AWG to 26AWG wires to be simply stripped and inserted into the connector body at 180 degree orientation to the bottom side of the PCB with an above board height of 0.80mm. This single connector will replace existing 2-Piece WTB solutions where a header is soldered onto the PCB and a secondary crimp-to-wire receptacle assembly is plugged in. Available in 1-6 positions, each connector will accept the entire wire gauge range for either solid or stranded wires at varying current ratings supported by each wire size. Once inserted, wires can easily be removed or replaced by twisting/unscrewing or by using a small blade extraction tool.

APPLICATIONS

- Industrial/Ruggedized Wire-to-Board applications
- Replace hard soldering of wire to a PCB
- Replace costly 2-Piece header and receptacle products
- Reference Product Specification 201-01-151
- Reference Application Notes 201-01-152

FEATURES AND BENEFITS

- Dual Beam box contact provides maximum mechanical stability and wire retention
- Tape and reel packaged for automated SMT placement
- Will accept either solid or stranded wire, 18-26AWG, plated or un-plated wires
- Simple strip and insert for wire loading, with easy twist and pull for wire removal

ELECTRICAL

- Voltage Rating: 600 VAC 1 way; 300 VAC 2 - 6 way
- Current Rating: See matrix below

ENVIRONMENTAL

- Operating Temperature: -40°C to +125°C

MECHANICAL

- Contact Material: Copper Alloy
- Contact Plating: Tin over Nickel
- Durability: 5 Cycles

HOW TO ORDER

00 — Prefix

9296 — Series

00X — Number of Ways
001 = 1
002 = 2
003 = 3
004 = 4
005 = 5
006 = 6

503 — Wire Gauge Size

Code	Accepted Wire Gauge	Max Insulation
503	18 – 26 AWG Solid or Stranded	2.2mm

X — Insulator Color
All Sizes
9 = UL White (Standard)
8 = UL Black (Special Order)

One Way Only (Special Order)
2 = UL Brown
3 = UL Blue
4 = UL Yellow
5 = UL Red
6 = UL Green
7 = UL Orange

06 — Plating Options
06 = Tin Plated

RoHS COMPLIANT

CURRENT RATING

18AWG	20AWG	22AWG	24AWG	26AWG
7A	6A	5A	4A	3A

Certification: UL File #E90723

The Important Information/Disclaimer is incorporated in the catalog where these specifications came from or available online at www.avx.com/disclaimer/ by reference and should be reviewed in full before placing any order.

POKE-HOME: INVERTED THRU BOARD
18-26 AWG: 00-9296

1 Position

9296 THROUGH BOARD MOUNT POKE HOME CONNECTOR 1 WAY

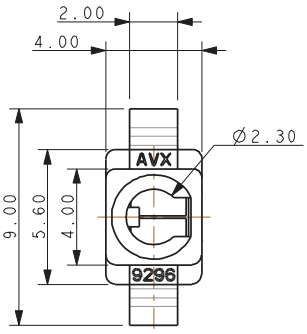

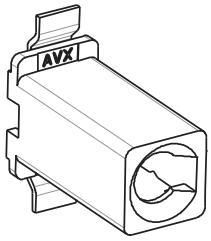

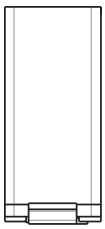

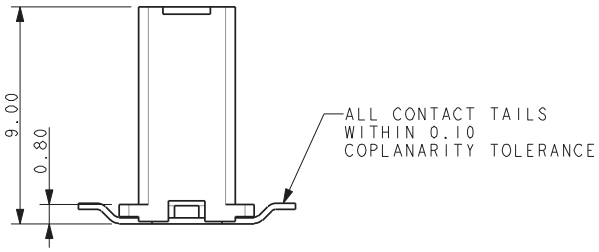

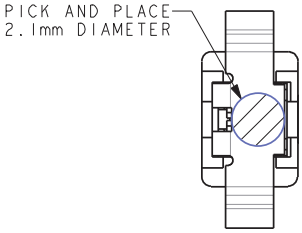

NOTES:
1. THROUGH BOARD SMT MOUNT 1 WAY POKE HOME CONNECTOR. FOR FURTHER DETAILS REFER TO PRODUCT SPECIFICATION 201-01-151 AND APPLICATION NOTES 201-01-152.
2. SUITABLE FOR WIRES 18AWG TO 26AWG. MAXIMUM INSULATION 2.20MM DIAMETER.
3. INSULATOR: NYLON 46, GLASS FILLED, UL94 V-0. COLOR REFER TO PAGE 100.
4. CONTACT: TIN PLATED COPPER ALLOY.
5. PACKING IN TAPE AND REEL, QTY. PER REEL 400, 330MM REEL.
6. GENERAL TOLERANCE ±0.20.
7. CLEARANCE HOLE FOR CONNECTOR.
8. UL REFERENCE E90723.

SUGGESTED PCB LAYOUT

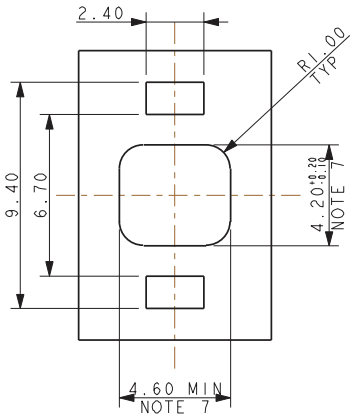

PACKING DETAILS

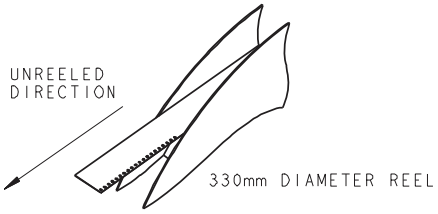

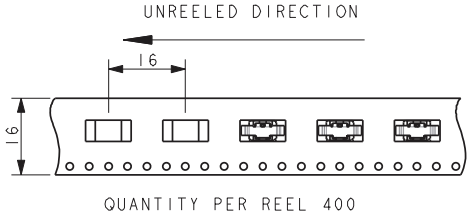

The Important Information/Disclaimer is incorporated in the catalog where these specifications came from or available online at www.avx.com/disclaimer/ by reference and should be reviewed in full before placing any order.

9296 THROUGH BOARD MOUNT POKE HOME CONNECTOR 2 WAY

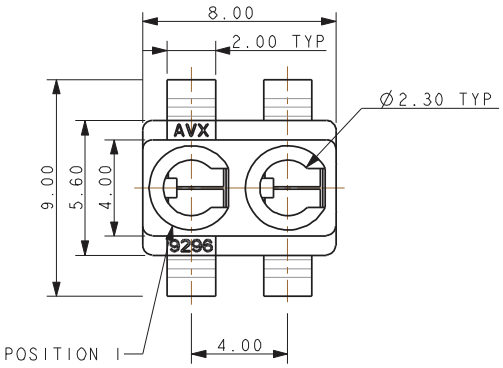

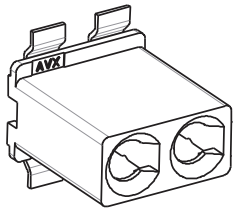

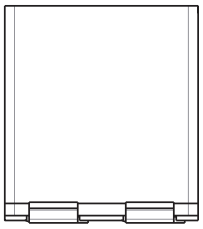

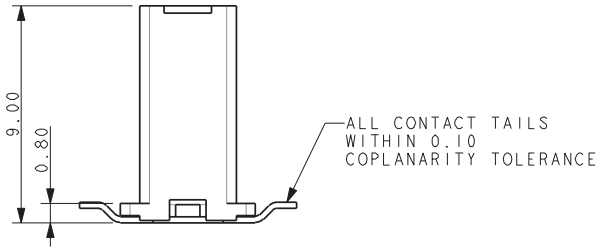

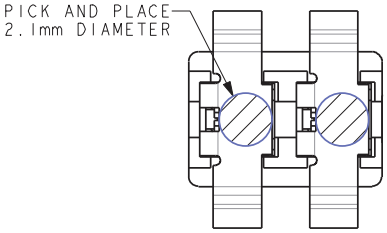

NOTES:
1. THROUGH BOARD SMT MOUNT 2 WAY POKE HOME CONNECTOR. FOR FURTHER DETAILS REFER TO PRODUCT SPECIFICATION 201-01-151 AND APPLICATION NOTES 201-01-152.
2. SUITABLE FOR WIRES 18AWG TO 26AWG. MAXIMUM INSULATION 2.20MM DIAMETER.
3. INSULATOR: NYLON 46, GLASS FILLED, UL94 V-0. COLOR REFER TO PAGE 100.
4. CONTACT: TIN PLATED COPPER ALLOY.
5. PACKING IN TAPE AND REEL, QTY. PER REEL 400, 330MM REEL.
6. GENERAL TOLERANCE ±0.20.
7. CLEARANCE HOLE FOR CONNECTOR.
8. UL REFERENCE E90723.

SUGGESTED PCB LAYOUT

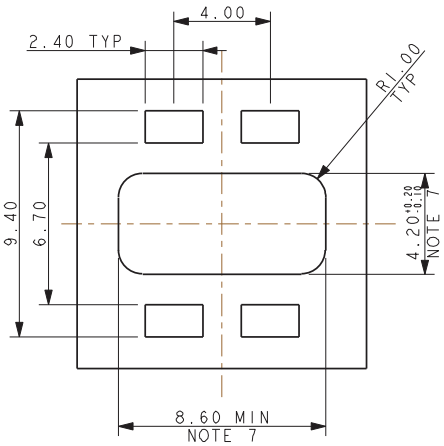

PACKING DETAILS

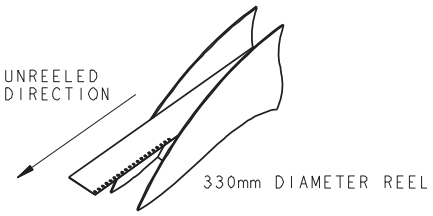

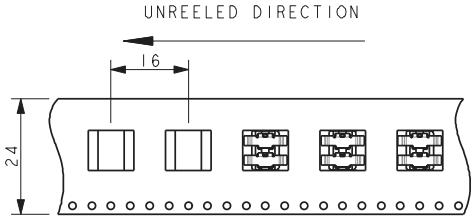

QUANTITY PER REEL 400

The Important Information/Disclaimer is incorporated in the catalog where these specifications came from or available online at www.avx.com/disclaimer/ by reference and should be reviewed in full before placing any order.

9296 THROUGH BOARD MOUNT POKE HOME CONNECTOR 3 WAY

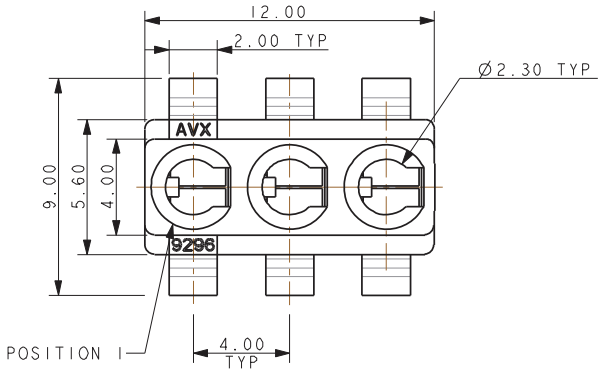

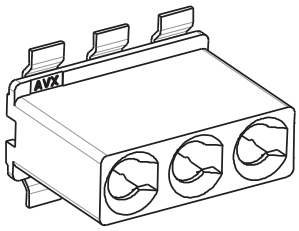

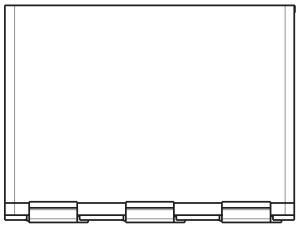

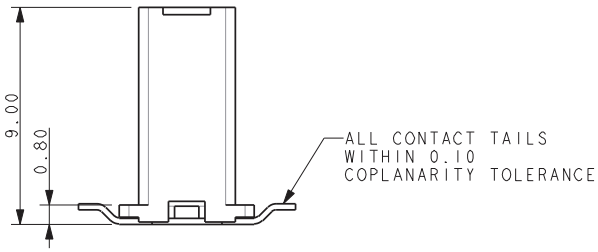

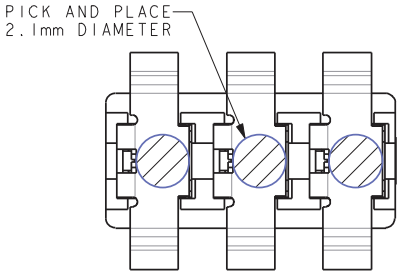

NOTES:
1. THROUGH BOARD SMT MOUNT 3 WAY POKE HOME CONNECTOR. FOR FURTHER DETAILS REFER TO PRODUCT SPECIFICATION 201-01-151 AND APPLICATION NOTES 201-01-152.
2. SUITABLE FOR WIRES 18AWG TO 26AWG. MAXIMUM INSULATION 2.20MM DIAMETER.
3. INSULATOR: NYLON 46, GLASS FILLED, UL94 V-0. COLOR REFER TO PAGE 100.
4. CONTACT: TIN PLATED COPPER ALLOY.
5. PACKING IN TAPE AND REEL, QTY. PER REEL 400, 330MM REEL.
6. GENERAL TOLERANCE ±0.20.
7. CLEARANCE HOLE FOR CONNECTOR.
8. UL REFERENCE E90723.

SUGGESTED PCB LAYOUT

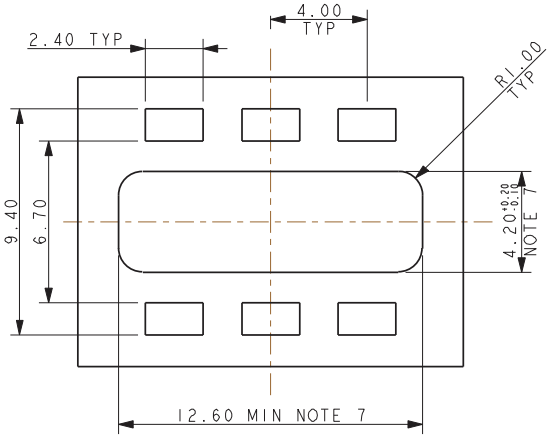

PACKING DETAILS

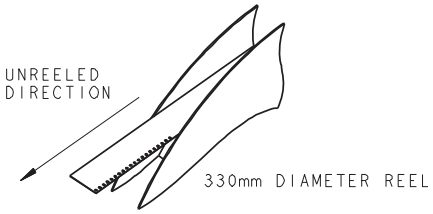

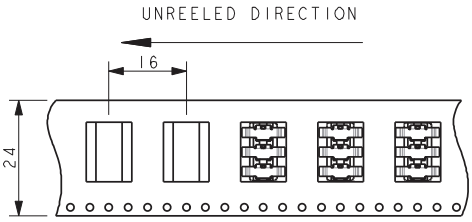

QUANTITY PER REEL 400

POKE-HOME: INVERTED THRU BOARD
18-26 AWG: 00-9296

4 Position

9296 THROUGH BOARD MOUNT POKE HOME CONNECTOR 4 WAY

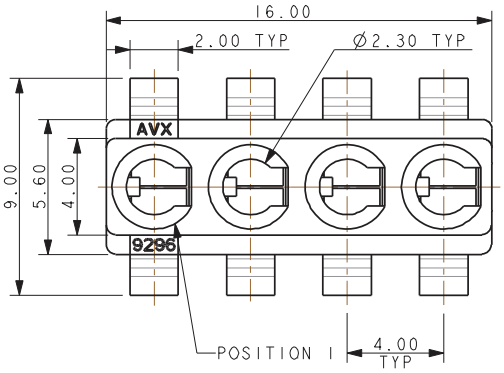

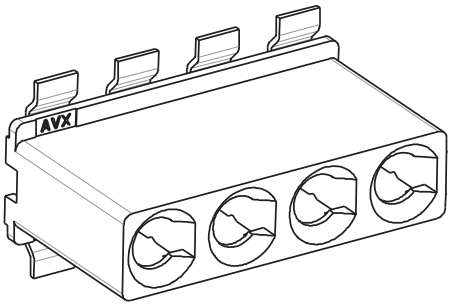

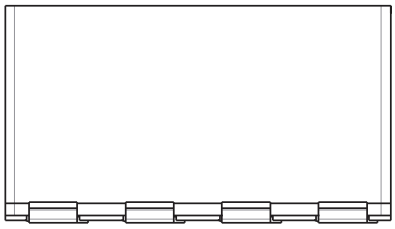

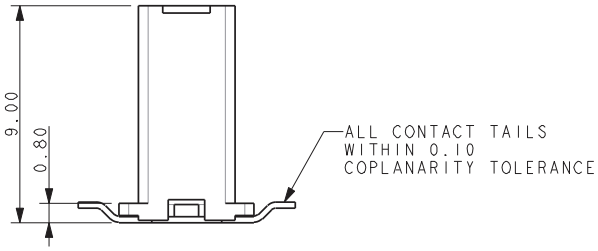

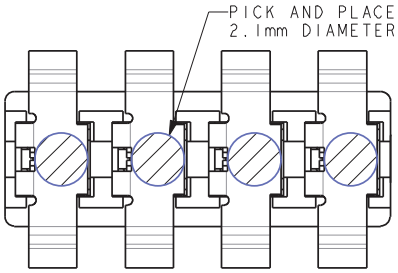

NOTES:
1. THROUGH BOARD SMT MOUNT 4 WAY POKE HOME CONNECTOR. FOR FURTHER DETAILS REFER TO PRODUCT SPECIFICATION 201-01-151 AND APPLICATION NOTES 201-01-152.
2. SUITABLE FOR WIRES 18AWG TO 26AWG. MAXIMUM INSULATION 2.20MM DIAMETER.
3. INSULATOR: NYLON 46, GLASS FILLED, UL94 V-0. COLOR REFER TO PAGE 100.
4. CONTACT: TIN PLATED COPPER ALLOY.
5. PACKING IN TAPE AND REEL, QTY. PER REEL 400, 330MM REEL.
6. GENERAL TOLERANCE ±0.20.
7. CLEARANCE HOLE FOR CONNECTOR.
8. UL REFERENCE E90723.

SUGGESTED PCB LAYOUT

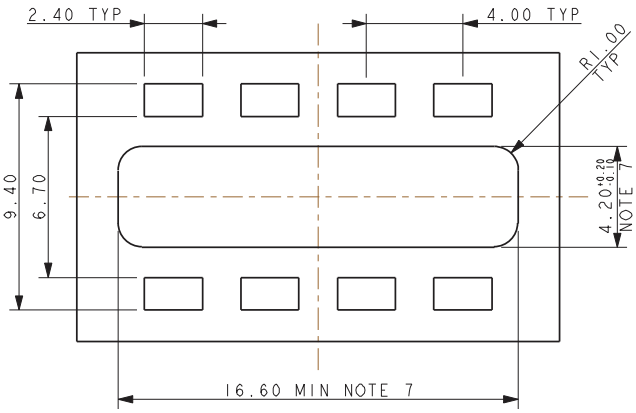

PACKING DETAILS

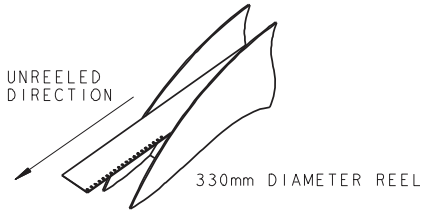

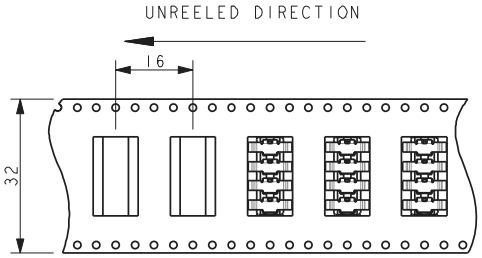

QUANTITY PER REEL 400

The Important Information/Disclaimer is incorporated in the catalog where these specifications came from or available online at www.avx.com/disclaimer/ by reference and should be reviewed in full before placing any order.

POKE-HOME: INVERTED THRU BOARD
18-26 AWG: 00-9296

5 Position

9296 THROUGH BOARD MOUNT POKE HOME CONNECTOR 5 WAY

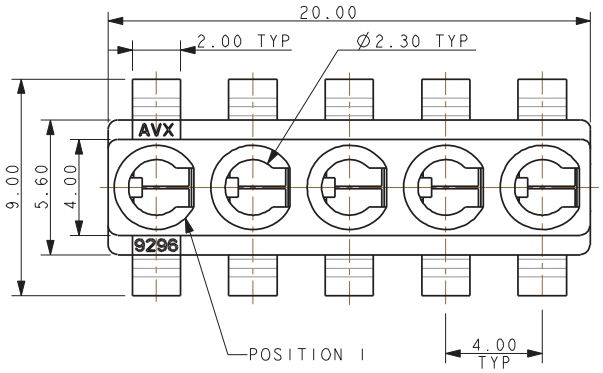

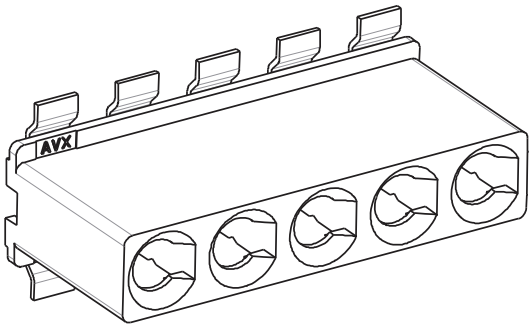

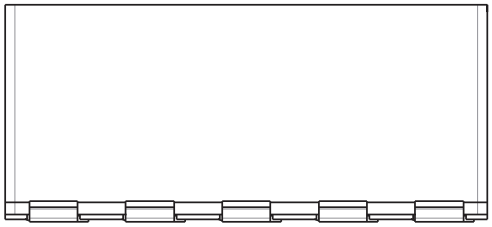

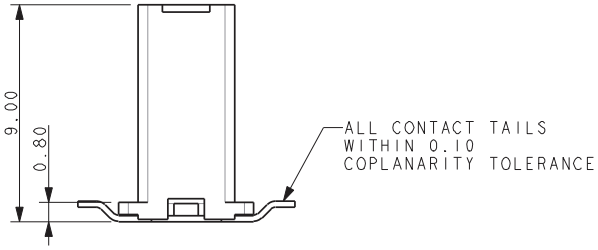

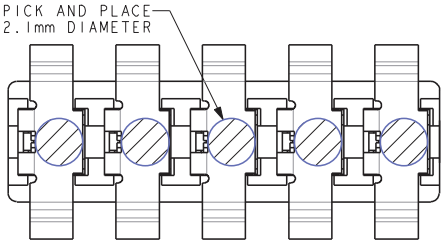

NOTES:

1. THROUGH BOARD SMT MOUNT 5 WAY POKE HOME CONNECTOR. FOR FURTHER DETAILS REFER TO PRODUCT SPECIFICATION 201-01-151 AND APPLICATION NOTES 201-01-152.
2. SUITABLE FOR WIRES 18AWG TO 26AWG. MAXIMUM INSULATION 2.20MM DIAMETER.
3. INSULATOR: NYLON 46, GLASS FILLED, UL94 V-0. COLOR REFER TO PAGE 100.
4. CONTACT: TIN PLATED COPPER ALLOY.
5. PACKING IN TAPE AND REEL, QTY. PER REEL 400, 330MM REEL.
6. GENERAL TOLERANCE ±0.20.
7. CLEARANCE HOLE FOR CONNECTOR.
8. UL REFERENCE E90723.

SUGGESTED PCB LAYOUT

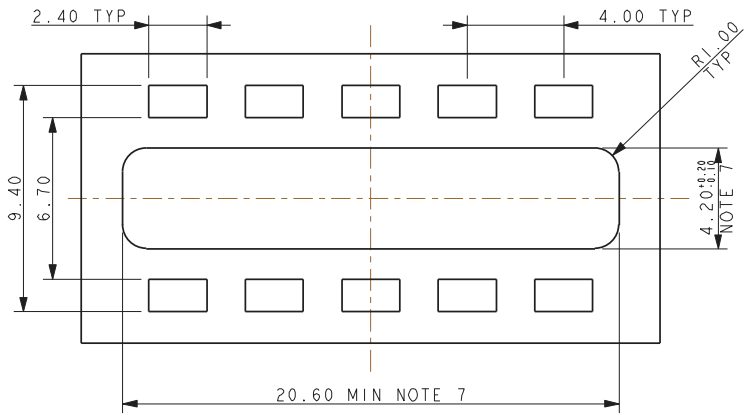

PACKING DETAILS

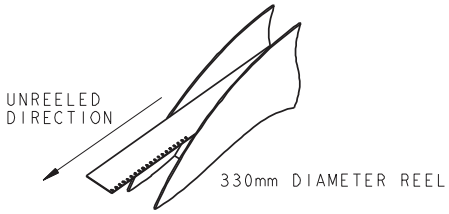

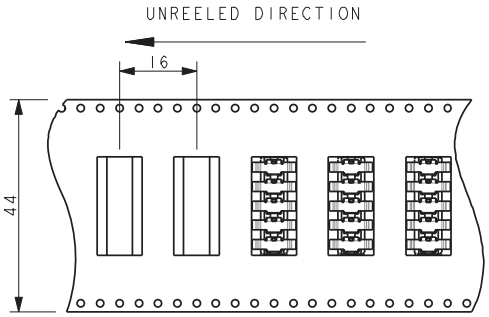

QUANTITY PER REEL 400

The Important Information/Disclaimer is incorporated in the catalog where these specifications came from or available online at www.avx.com/disclaimer/ by reference and should be reviewed in full before placing any order.

POKE-HOME: INVERTED THRU BOARD
18-26 AWG: 00-9296

6 Position

9296 THROUGH BOARD MOUNT POKE HOME CONNECTOR 6 WAY

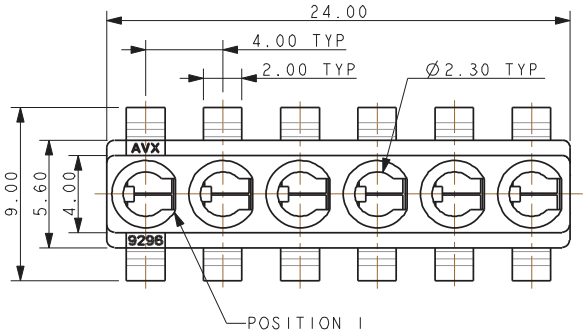

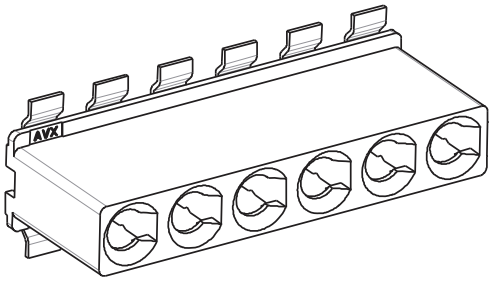

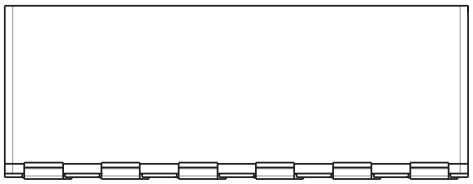

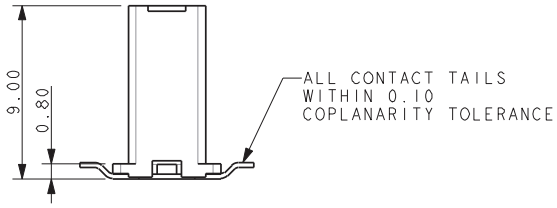

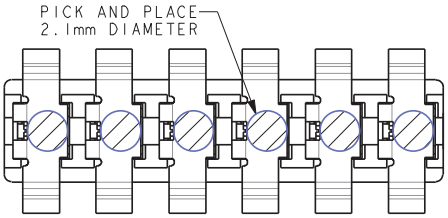

NOTES:

1. THROUGH BOARD SMT MOUNT 6 WAY POKE HOME CONNECTOR. FOR FURTHER DETAILS REFER TO PRODUCT SPECIFICATION 201-01-151 AND APPLICATION NOTES 201-01-152.
2. SUITABLE FOR WIRES 18AWG TO 26AWG. MAXIMUM INSULATION 2.20MM DIAMETER.
3. INSULATOR: NYLON 46, GLASS FILLED, UL94 V-0. COLOR REFER TO PAGE 100.
4. CONTACT: TIN PLATED COPPER ALLOY.
5. PACKING IN TAPE AND REEL, QTY. PER REEL 400, 330MM REEL.
6. GENERAL TOLERANCE ±0.20.
7. CLEARANCE HOLE FOR CONNECTOR.
8. UL REFERENCE E90723.

PACKING DETAILS

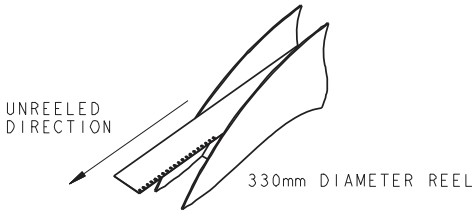

SUGGESTED PCB LAYOUT

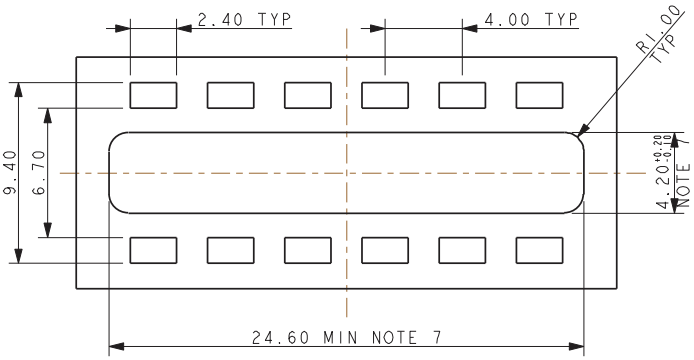

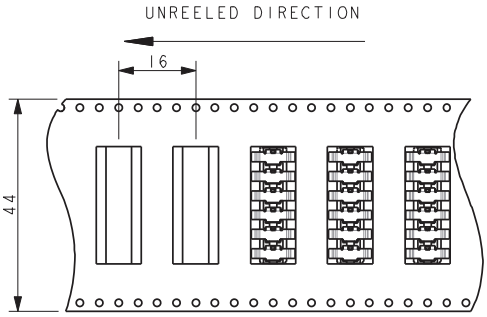

QUANTITY PER REEL 400

The Important Information/Disclaimer is incorporated in the catalog where these specifications came from or available online at www.avx.com/disclaimer/ by reference and should be reviewed in full before placing any order.

9296 THROUGH BOARD MOUNT POKE HOME CONNECTOR ASSEMBLY

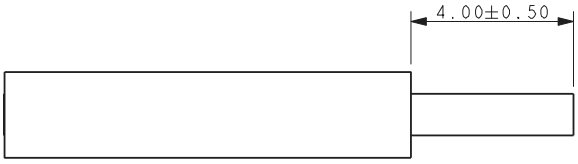

WIRE STRIP LENGTH

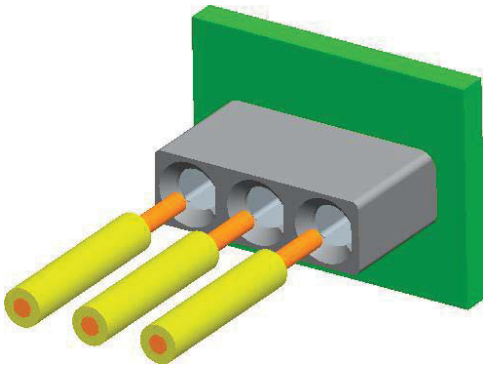

Refer to application notes 201-01-152 for full assembly procedure.

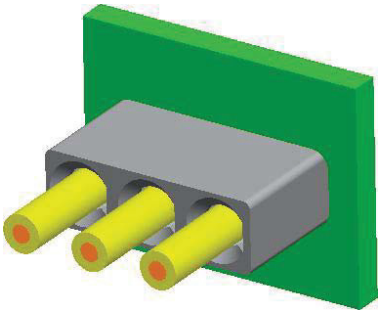

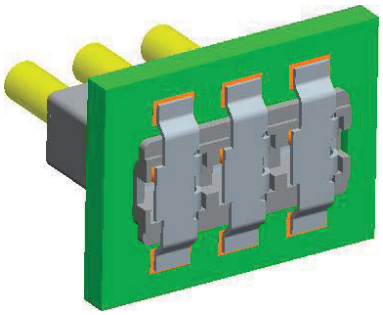

THROUGH BOARD MOUNT POKE HOME CONNECTOR WIRE EXTRACTION TOOL

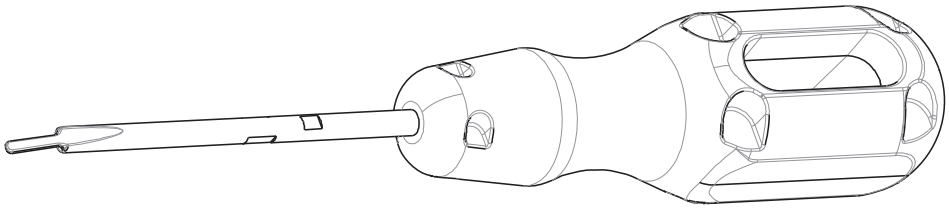

06-9296-7003-01-000 – PLASTIC TOOL
06-9296-7004-03-000 – METAL TOOL

Refer to application notes 201-01-152 for full wire extraction procedure.

The Important Information/Disclaimer is incorporated in the catalog where these specifications came from or available online at www.avx.com/disclaimer/ by reference and should be reviewed in full before placing any order.

SINGLE VERTICAL TOP ENTRY 18 AWG: 58-9296

General Information

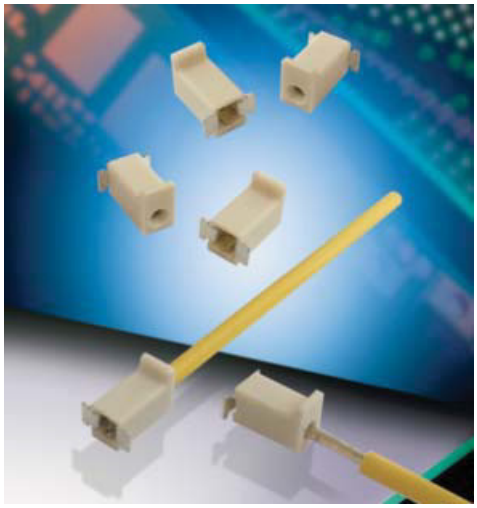

Vertical poke-home connectors were introduced into the market a few years ago to provide a reliable, yet cost effective discrete wire-to-board termination in perpendicular applications. Designed to bridge the gap between inconsistent hand soldering of wires and costly 2-piece connector systems, these connectors are available in a range of positions and configurations while accepting 18 to 26AWG solid or stranded wires.

This latest connector was developed specifically to support the high volume 18AWG wire applications used in power supply, LED driver and industrial control products where PCB space is limited. This new 9296 connector offers a robust single beam contact which securely captures and retains the wire in a 23% smaller package size.

APPLICATIONS

- Replace inconsistent hand soldered perpendicular wire terminations onto PCB's in:
  - Power Supplies
  - LED Drivers
  - Industrial/Motor Controls
- Offer a simple and cost reduced solution to existing 2-Piece connector systems

FEATURES AND BENEFITS

- Pre-Plated phosphor bronze contact material provides excellent spring performance with high fatigue and corrosion resistance
- The single stamped and formed box contact maximizes board attachment and wire capture strength
- Tight tolerance and wire insulation stop helps to prevent potting from flowing into the connector during encapsulation processes
- Integral molded in flange provides a generous vacuum pick-up point for automated SMT placement

ELECTRICAL

- Current Rating: 8 Amps
- Voltage Rating: 600 VAC

ENVIRONMENTAL

- Operating Temperature: -40°C to +125°C

MECHANICAL

- Insulator Material: Glass-Filled Nylon 46, UL94V0
- Contact Material: Phosphor Bronze
- Plating: Pure Tin
- Durability: 3 Cycles

HOW TO ORDER

589296001000014

RoHS COMPLIANT

The Important Information/Disclaimer is incorporated in the catalog where these specifications came from or available online at www.avx.com/disclaimer/ by reference and should be reviewed in full before placing any order.

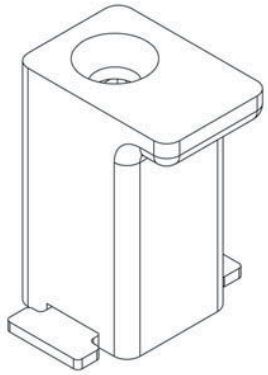

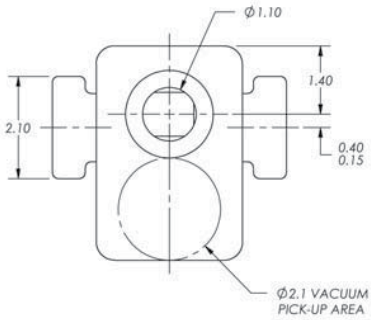

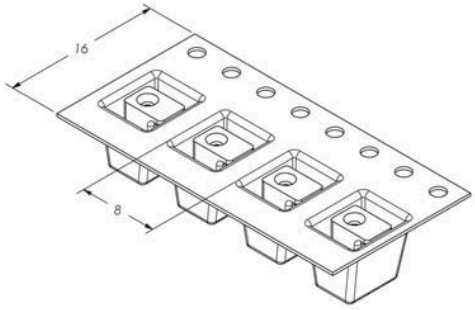

PARTS IN POCKET TAPE
SCALE 2.5:1

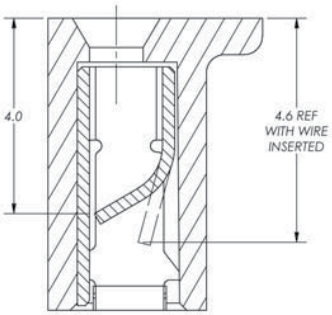

SECTION X-X

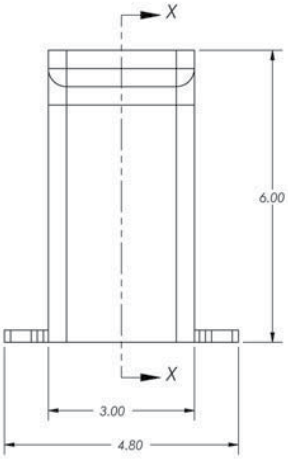

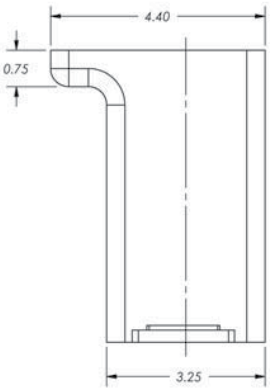

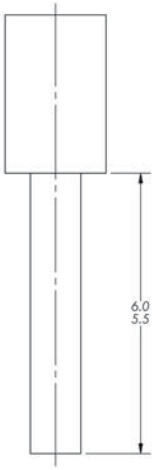

RECOMMENDED
WIRE STRIP DETAIL

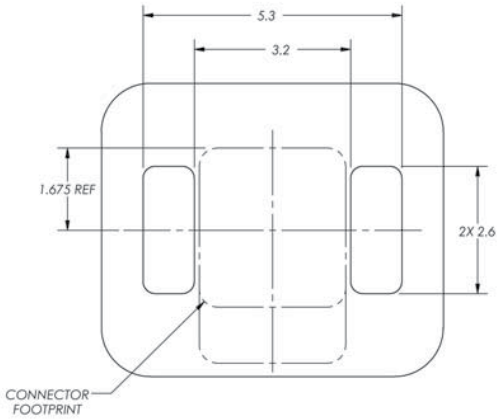

RECOMMENDED PCB LAYOUT

NOTES:
1. HOUSING MATERIAL: GLASS-FILLED, HIGH TEMP. THERMOPLASTIC; UL94V-0; COLOR: NATURAL.
2. CONTACT MATERIAL: HIGH STRENGTH PHOSPHORB BRONZE ALLOY; PRE-PLATED LEAD-FREE TIN OVER NICKEL PLATING.
3. PACKAGING: POCKET TAPE ON REELS; 1,250 PARTS PER REEL.

The Important Information/Disclaimer is incorporated in the catalog where these specifications came from or available online at www.avx.com/disclaimer/ by reference and should be reviewed in full before placing any order.

STANDARD VERTICAL TOP ENTRY 18-22AWG

00-9296

GENERAL DESCRIPTION

Vertical poke-home connectors were introduced into the market several years ago to provide a reliable, yet cost effective discrete wire-to-board termination in perpendicular applications. These were designed to bridge the gap between inconsistent and challenging hand soldering of wires and costly 2-piece connector systems in low pin count applications

This latest connector was developed specifically to support 18 to 22AWG solid or stranded wire terminations used in power supply, LED driver and industrial control products where PCB space is limited. This new 9296 connector offers a robust single beam contact which securely captures and retains the wire in a 23% smaller package size over previous versions

APPLICATIONS

- Replace inconsistent hand soldered perpendicular wire terminations onto PCB's in:
  - Power Supplies
  - LED Drivers
  - Industrial/Motor Controls
- Offer a simple and cost reduced solution to existing 2-Piece connector systems

ELECTRICAL

- Current Rating: See Below
- Voltage Rating: 600 VAC

ENVIRONMENTAL

- Operating Temperature: -40°C to +130°C

FEATURES AND BENEFITS

- Pre-Plated phosphor bronze contact material provides excellent spring performance with high fatigue and corrosion resistance
- The single stamped and formed box contact maximizes board attachment and wire capture strength
- Integral molded in flange provides a generous vacuum pick-up point for automated SMT placement
- UL approved color range to match individual wires for easy and accurate final product assembly

MECHANICAL

- Insulator Material; Glass-Filled Nylon 46: UL94V0
- Contact Material: Phosphor Bronze
- Plating: Lead-Free Tin Over Nickel
- Durability: 3 Cycles

HOW TO ORDER

00	9296	001	603	X	06
Prefix Wire to Board Connector	**Series**	**No. of Ways**	**Description** 603 = 18-22AWG Solid or Stranded	**Plating** 2 = Brown 3 = Blue 4 = Yellow 5 = Red 6 = Green 7 = Orange 8 = Black 9 = White	**Plating** 006 = Tin Plated

RoHS COMPLIANT

CURRENT RATING

18AWG	20AWG	22AWG
8A	7A	6A

Certification: UL File #E90723

The Important Information/Disclaimer is incorporated in the catalog where these specifications came from or available online at www.avx.com/disclaimer/ by reference and should be reviewed in full before placing any order.

PARTS IN POCKET TAPE SCALE 2:1

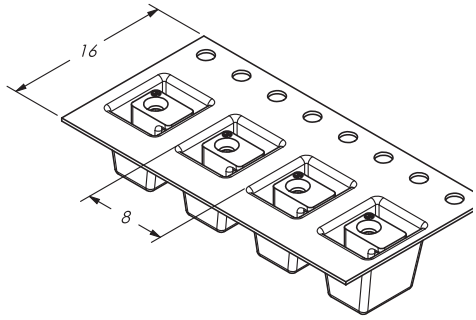

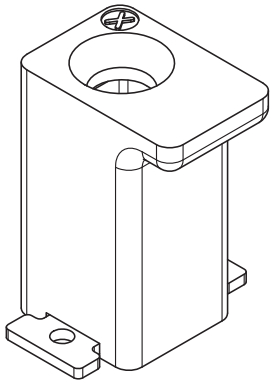

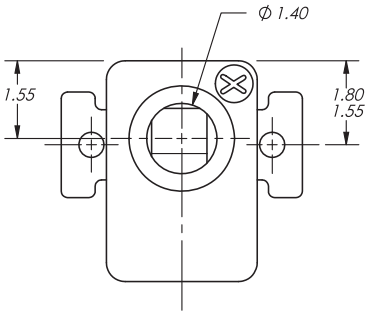

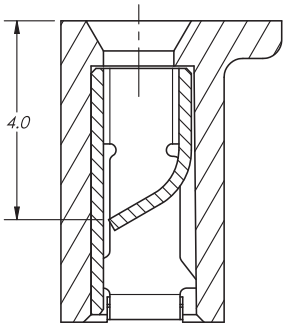

SECTION ON X-X

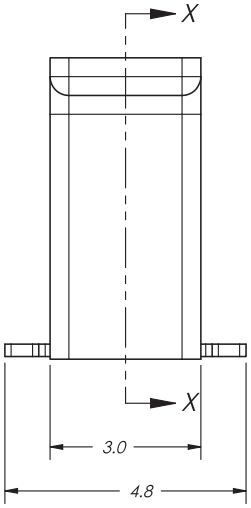

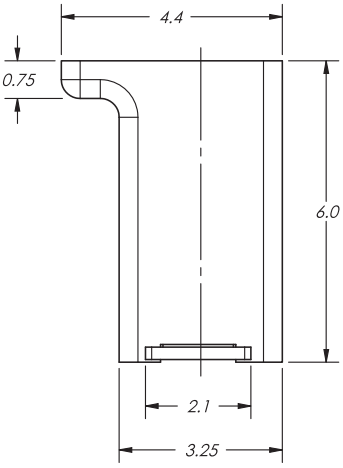

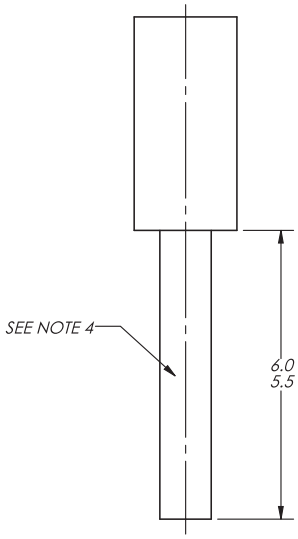

RECOMMENDED WIRE STRIP DETAIL

RECOMMENDED PCB LAYOUT

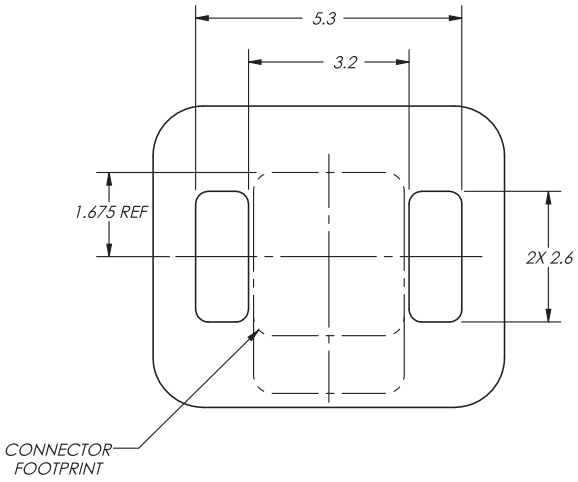

NOTES:
1. HOUSING MATERIAL: GLASS-FILLED, HIGH TEMP. THERMOPLASTIC; UL94V-0; COLOR: SEE PAGE 1.
2. CONTACT MATERIAL: HIGH STRENGTH PHOSPHOR BRONZE ALLOY; PRE-PLATED LEAD-FREE TIN OVER NICKEL PLATING.
3. PACKAGING: POCKET TAPE ON REELS; 1,250 PARTS PER REEL.
4. STRANDED WIRE MUST BE SUFFICIENTLY TWISTED OR TIN DIPPED FOR PROPER INSERTION.

The Important Information/Disclaimer is incorporated in the catalog where these specifications came from or available online at www.avx.com/disclaimer/ by reference and should be reviewed in full before placing any order.

POKE-HOME: SINGLE VERTICAL CONTACT 18-24 AWG: 70-9296

General Information

KYOCERA AVX continues to develop innovative connectors for the industrial electronics market that provide significant benefits over existing, outdated connector solutions. The latest release is single vertical Wire-to-Board (WTB) contacts that provide cost effective, yet robust discrete wire termination without the expense of an insulator and assembly costs. This new family of top and bottom entry contacts compliments the existing vertical poke home connectors already on the market, providing a lower cost solution without jeopardizing performance

The new contacts support both solid and stranded wires ranging from 24AWG down to 18AWG and current ratings as high as 12 amps. The set of four contacts provide both top and bottom entry for FR4 and metal core printed circuit boards.

APPLICATIONS

- Machine Controls: motors, drives, solenoids, sensors, fans and pumps
- Commercial Buildings: controls, security, fire and sensors
- Smart Grid: meters, breakers and panels
- SSL/LED; bulbs, fixtures, signage and streetlights

FEATURES AND BENEFITS

- Dual Beam contact provides maximum mechanical stability and wire retention
- Tape and reel packaged for automated SMT placement
- Staged current rating based on AWG, maximum is 12A (18AWG)
- Increased functionality with the single contact placement: multiple contacts and/or specific individual locations

ELECTRICAL

- Voltage Rating: 300V
  Based on placement distance
- Current Rating: See matrix below

ENVIRONMENTAL

- Operating Temperature:
  -40°C to +125°C

MECHANICAL

- Contact Material: Phosphor Bronze
- Contact Plating: Pure Tin
- Durability: 5 Cycles

HOW TO ORDER

00 — **Prefix**: 70 = Contact

9296 — **Series**

001 — **Number of Ways**: 001 = 1

1X3 — **Contact Style**

Code	Contact Location	Wire Insertion Direction	Recommended For Board Type	Wire Gauges
103	Top Side	Bottom Entry	FR4	18 – 24 AWG
113	Through Board	Top Entry	FR4	18 – 24 AWG
123	Top Side	Bottom Entry	Metal Clad	18 – 24 AWG
133	Through Board	Top Entry	Metal Clad	18 – 24 AWG

006 — **Plating Options**: 006 = Pure Tin All Over

RoHS COMPLIANT

CURRENT RATING

18AWG	20AWG	22AWG	24AWG
15A	14A	10A	9A

Certification: UL File #E90723

The Important Information/Disclaimer is incorporated in the catalog where these specifications came from or available online at www.avx.com/disclaimer/ by reference and should be reviewed in full before placing any order.

70-9296-001-103-006
9296 VERTICAL MOUNT SMT CONTACT
TOP SIDE CONTACT – BOTTOM ENTRY WIRE (FR4 BOARD)

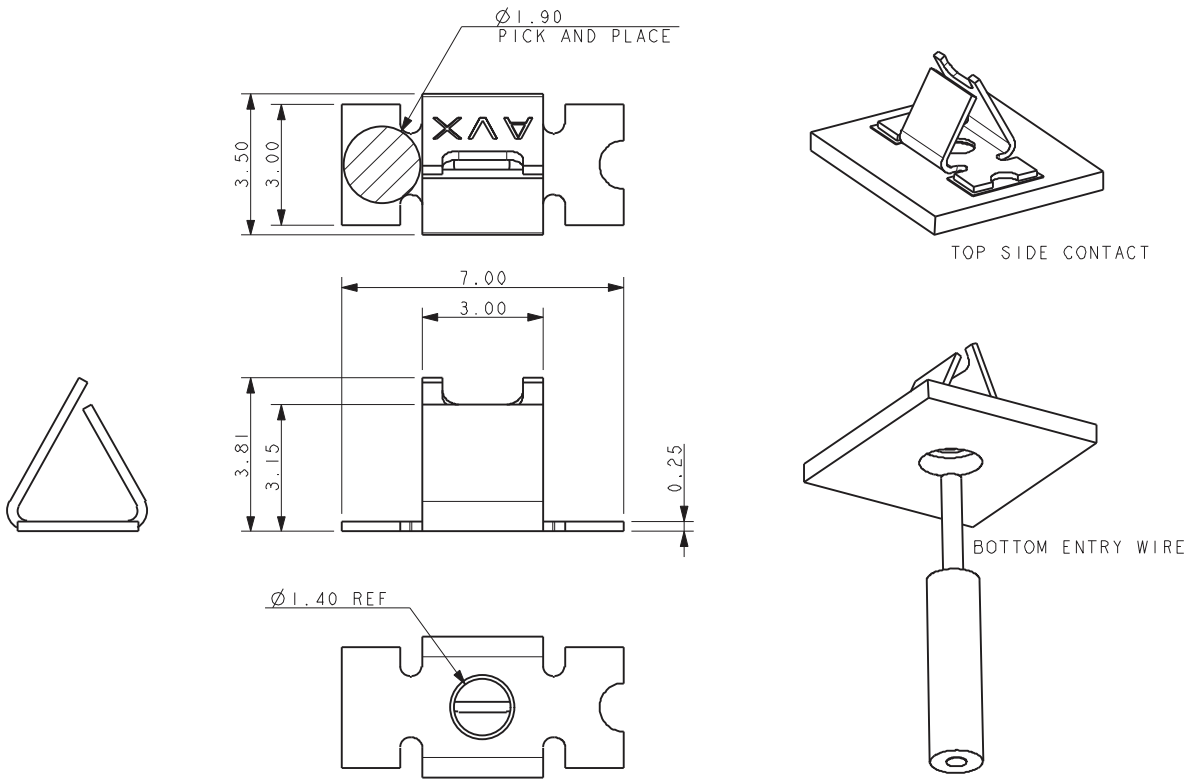

SUGGESTED PCB LAYOUT

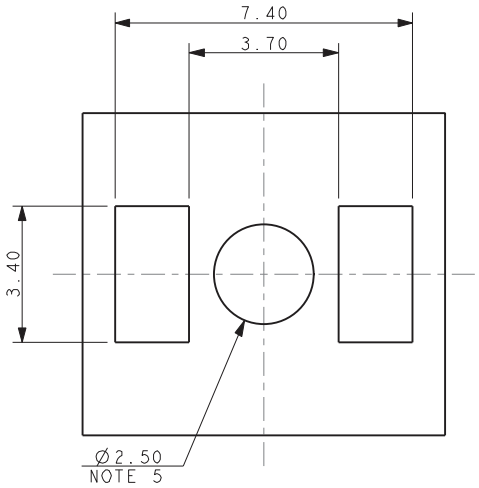

NOTES:
1. CONTACT MOUNTS ON TOP SIDE OF BOARD, WIRE INSERTED FROM UNDERSIDE OF BOARD.
2. STYLE RECOMMENDED FOR FR4 BOARDS WHERE MINIMUM CLEARANCE REQUIRED TO CONTACT AND MOUNTING PADS.
3. FOR FURTHER INFORMATION REFER TO ELCO SPECIFICATION 201-01-161 AND APPLICATION NOTES 201-01-175.
4. MATERIAL: TIN PLATED PHOSPHOR BRONZE.
5. HOLE FOR WIRE INSERTION.
6. PACING IN TAPE AND REEL, 2000 PIECES PER REEL.
7. FOR WIRE TRIM DETAILS REFER TO PAGE 115.
8. UL REFERENCE E90723.
9. GENERAL TOLERANCE ±0.10.

PACKING DETAILS

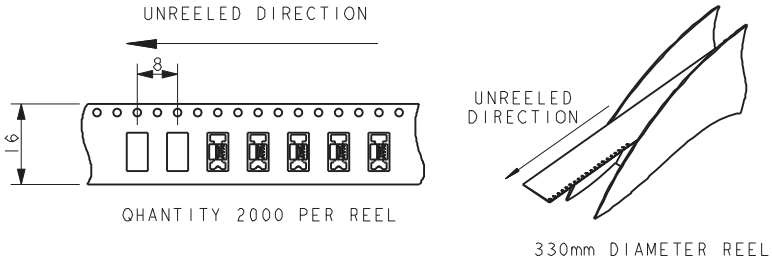

The Important Information/Disclaimer is incorporated in the catalog where these specifications came from or available online at www.avx.com/disclaimer/ by reference and should be reviewed in full before placing any order.

70-9296-001-113-006
9296 VERTICAL MOUNT SMT CONTACT
THROUGH BOARD CONTACT – TOP ENTRY WIRE (FR4 BOARD)

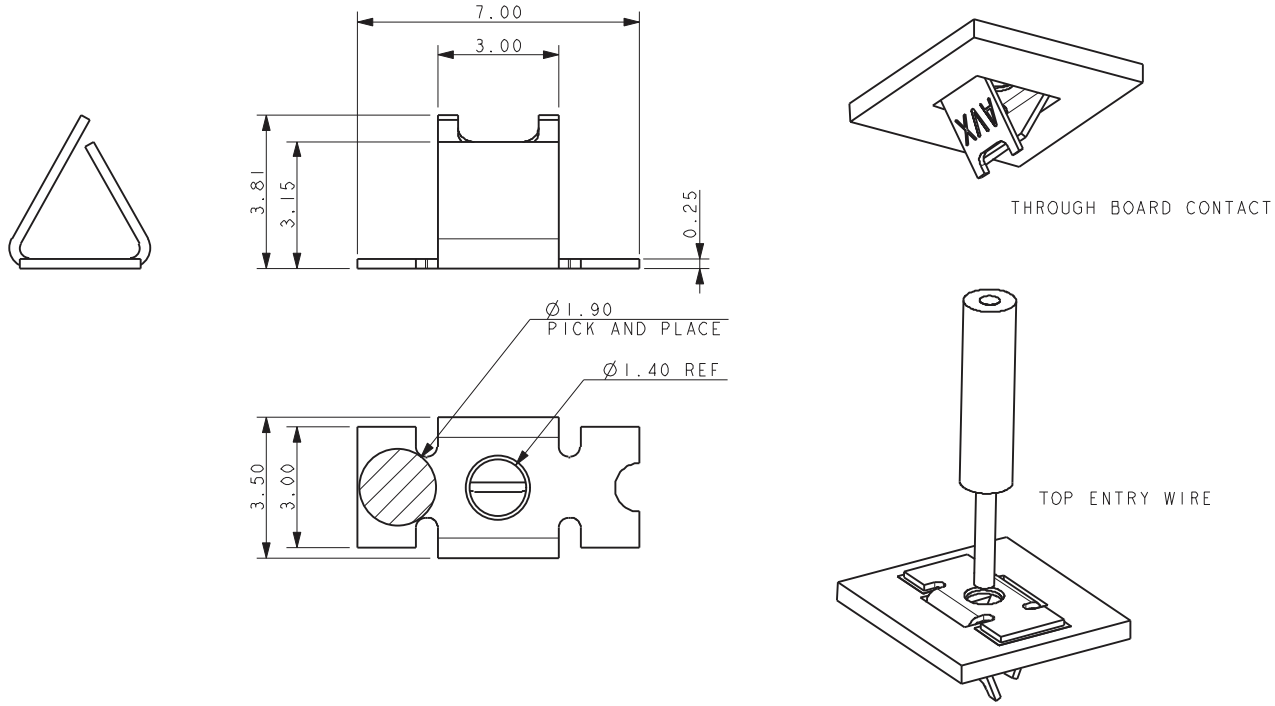

SUGGESTED PCB LAYOUT

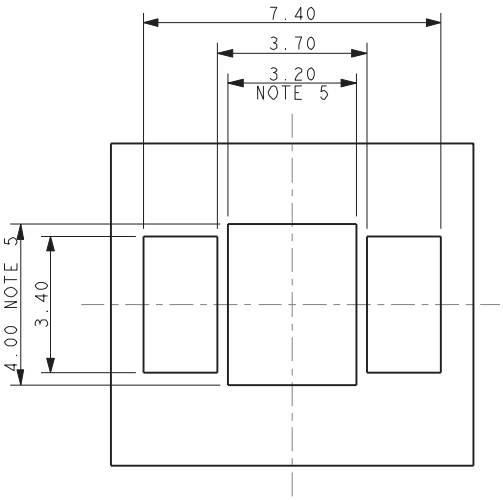

NOTES:
1. CONTACT MOUNTS THROUGH THE BOARD, WIRE INSERTED FROM TOP SIDE
2. OF BOARD.
3. STYLE RECOMMENDED FOR FR4 BOARDS WHERE MINIMUM CLEARANCE REQUIRED TO CONTACT AND MOUNTING PADS.
4. FOR FURTHER INFORMATION REFER TO ELCO SPECIFICATION 201-01-161 AND APPLICATION NOTES 201-01-175.
5. MATERIAL: TIN PLATED PHOSPHOR BRONZE.
6. HOLE DIMENSIONS FOR CONTACT.
7. PACING IN TAPE AND REEL, 2000 PIECES PER REEL.
8. FOR WIRE TRIM DETAILS REFER TO PAGE 115.
9. UL REFERENCE E90723.
10. GENERAL TOLERANCE ±0.10.

PACKING DETAILS

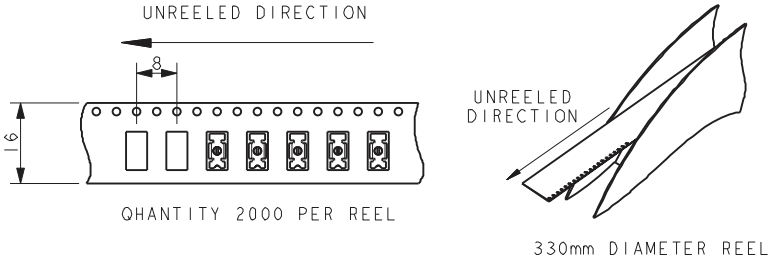

The Important Information/Disclaimer is incorporated in the catalog where these specifications came from or available online at www.avx.com/disclaimer/ by reference and should be reviewed in full before placing any order.

70-9296-001-123-006
9296 VERTICAL MOUNT SMT CONTACT
TOP SIDE CONTACT – BOTTOM ENTRY WIRE (METAL BOARD)

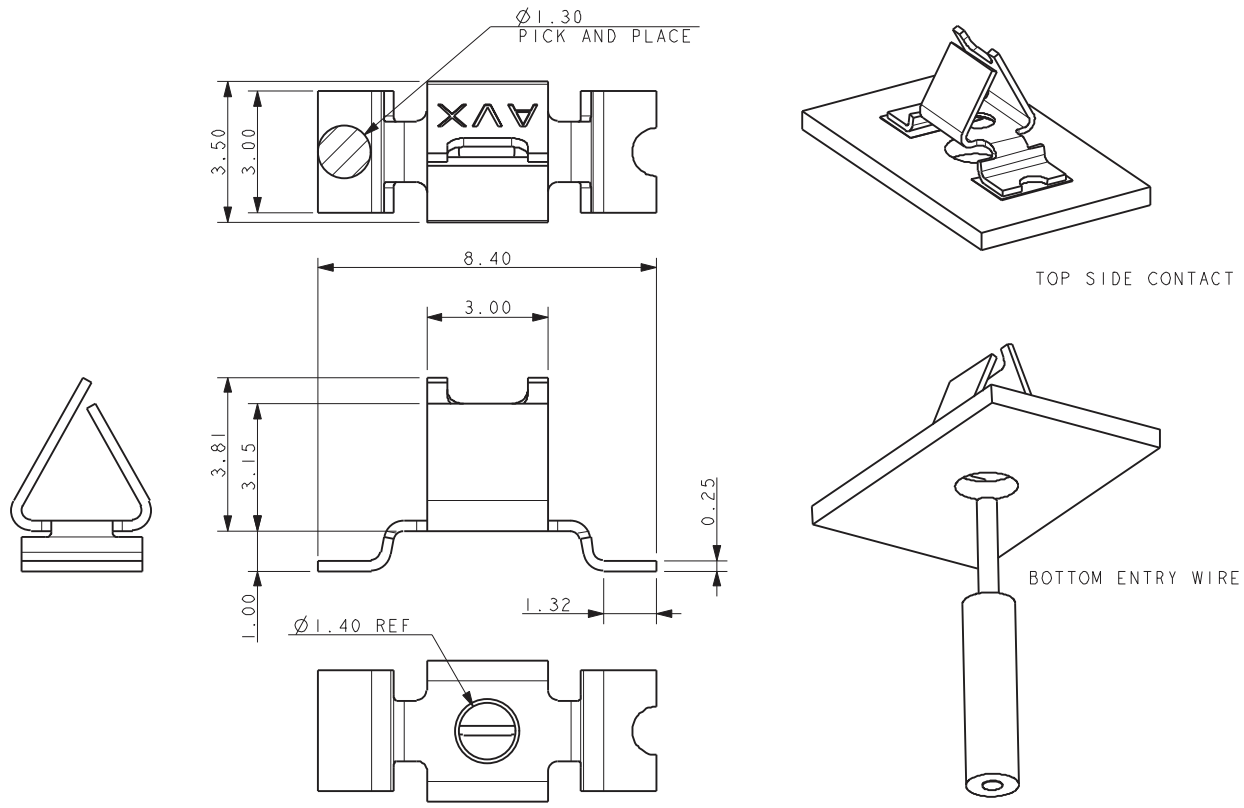

SUGGESTED PCB LAYOUT

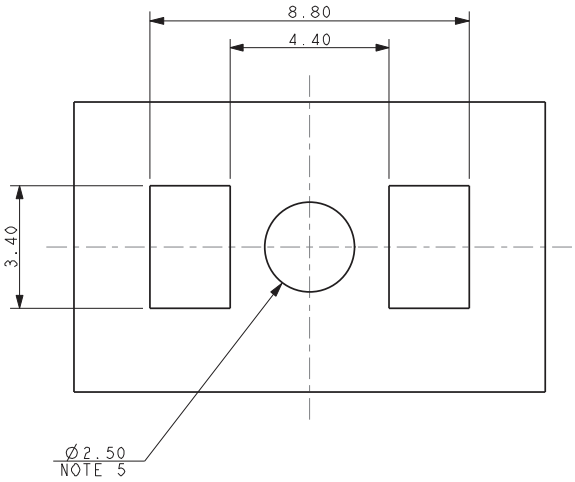

NOTES:
1. CONTACT MOUNTS ON TOP SIDE OF BOARD, WIRE INSERTED FROM UNDERSIDE OF BOARD.
2. STYLE RECOMMENDED FOR METAL CLAD BOARDS WHERE MAXIMUM CLEARANCE REQUIRED TO CONTACT AND MOUNTING PADS.
3. FOR FURTHER INFORMATION REFER TO ELCO SPECIFICATION 201-01-161 AND APPLICATION NOTES 201-01-175.
4. MATERIAL: TIN PLATED PHOSPHOR BRONZE.
5. HOLE FOR WIRE INSERTION.
6. PACING IN TAPE AND REEL, 1600 PIECES PER REEL.
7. FOR WIRE TRIM DETAILS REFER TO PAGE 115.
8. UL REFERENCE E90723.
9. GENERAL TOLERANCE ±0.10.

PACKING DETAILS

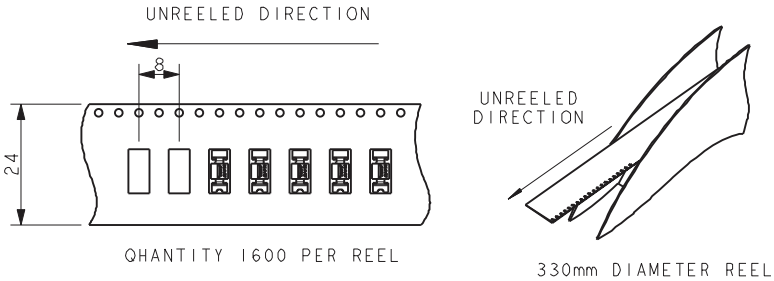

The Important Information/Disclaimer is incorporated in the catalog where these specifications came from or available online at www.avx.com/disclaimer/ by reference and should be reviewed in full before placing any order.

70-9296-001-133-006
9296 VERTICAL MOUNT SMT CONTACT
THROUGH BOARD CONTACT – TOP ENTRY WIRE (METAL BOARD)

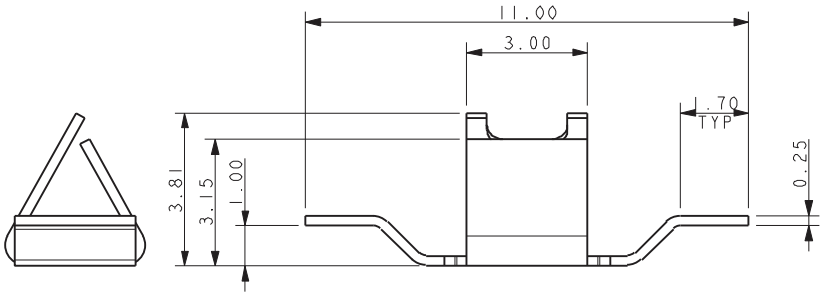

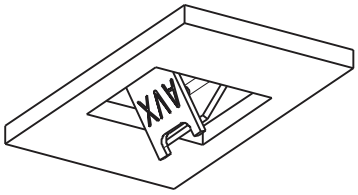

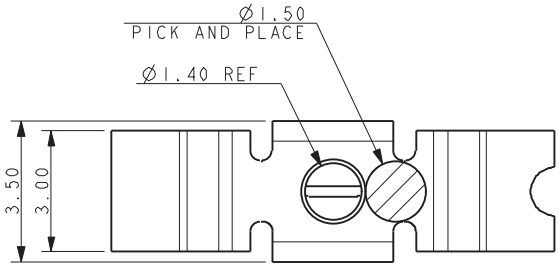

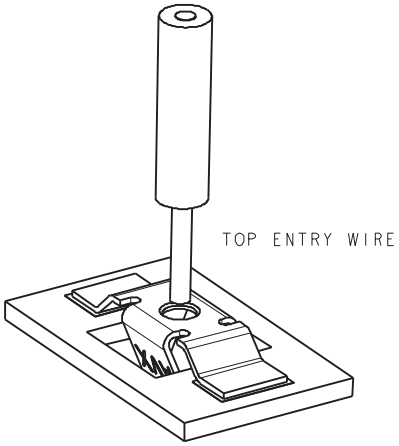

SUGGESTED PCB LAYOUT

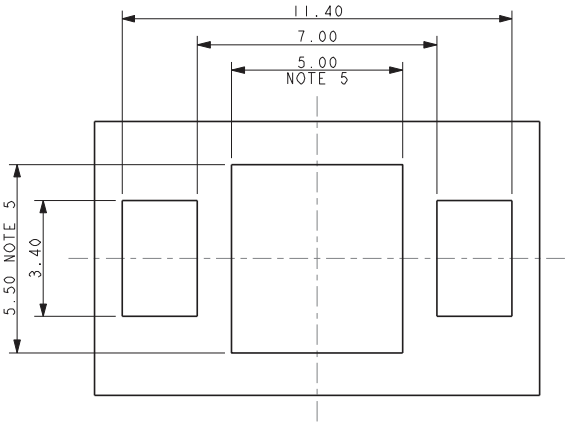

NOTES:
1. CONTACT MOUNTS THROUGH THE BOARD, WIRE INSERTED FROM TOP SIDE OF BOARD.
2. STYLE RECOMMENDED FOR METAL CLAD BOARDS WHERE ADDITIONAL CLEARANCE REQUIRED TO CONTACT AND MOUNTING PADS.
3. FOR FURTHER INFORMATION REFER TO ELCO SPECIFICATION 201-01-161 AND APPLICATION NOTES 201-01-175.
4. MATERIAL: TIN PLATED PHOSPHOR BRONZE.
5. HOLE DIMENSIONS FOR CONTACT.
6. PACING IN TAPE AND REEL, 2000 PIECES PER REEL.
7. FOR WIRE TRIM DETAILS REFER TO PAGE 115.
8. UL REFERENCE E90723.
9. GENERAL TOLERANCE ±0.10.

PACKING DETAILS

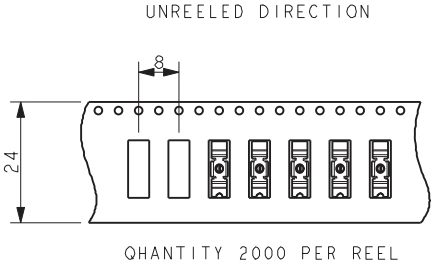

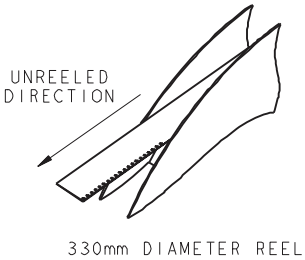

The Important Information/Disclaimer is incorporated in the catalog where these specifications came from or available online at www.avx.com/disclaimer/ by reference and should be reviewed in full before placing any order.

9296 VERTIAL MOUNT SMT CONTACT WIRE TRIM DETAILS

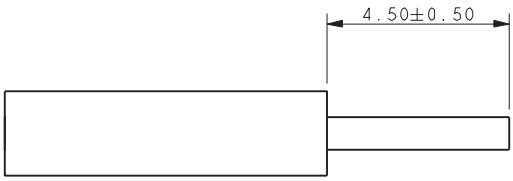

WIRE STRIP LENGTH, ALL STYLES

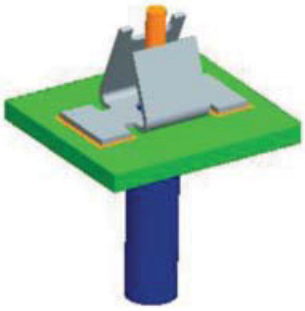

70-9296-001-103-006

70-9296-001-113-006

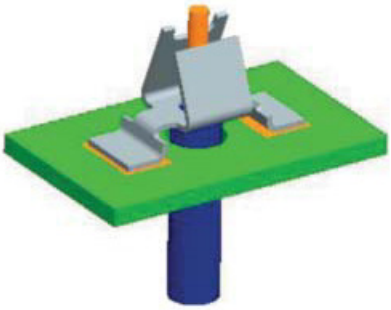

70-9296-001-123-006

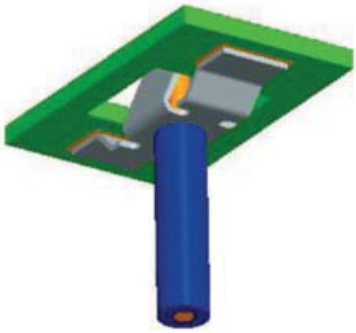

70-9296-001-133-006

NOTES:
1. FOR FULL ASSEMBLY PROCEDURE REFER TO APPLICATION NOTES 201-01-175.
2. THE SAME WIRE STRIP LENGTH APPLIES TO ALL STYLES.
3. STRANDED WIRES SHOULD BE TWISTED TO PREVENT SINGLE STRANDS BECOMING DETACHED WHEN INSERTED INTO CONTACT.

The Important Information/Disclaimer is incorporated in the catalog where these specifications came from or available online at www.avx.com/disclaimer/ by reference and should be reviewed in full before placing any order.

POKE-HOME: MICRO SINGLE VERTICAL CONTACT 22-26 AWG: 70-9296

General Information

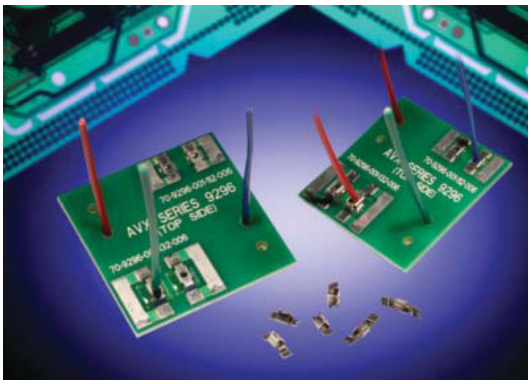

KYOCERA AVX continues to develop innovative connectors for the industrial electronics market that provide significant benefits over existing, outdated connector solutions. The latest release is single vertical Wire-to-Board (WTB) contacts that provide cost effective, yet robust discrete wire termination without the expense of an insulator and assembly costs. This new family of top and bottom entry contacts compliments the existing vertical poke home connectors already on the market, providing a lower cost solution without jeopardizing performance.

The new contacts support both solid and stranded wires ranging from 26AWG down to 22AWG and current ratings as high as 8 amps. Due to the mechanical stiffness of the small contact, 26AWG stranded wires may need to be pre-tinned to facilitate insertion. The set of four contacts provide both top and bottom entry for FR4 and metal core printed circuit boards.

APPLICATIONS

- Machine Controls: motors, drives, solenoids, sensors, fans and pumps
- Commercial Buildings: controls, security, fire and sensors
- Smart Grid: meters, breakers and panels
- SSL/LED; bulbs, fixtures, signage and streetlights
- Application notes: refer to 201-01-175

FEATURES AND BENEFITS

- Dual Beam contact provides maximum mechanical stability and wire retention
- Tape and reel packaged for automated SMT placement
- Staged current rating based on AWG, maximum is 8A (22AWG)
- Increased functionality with the single contact placement: multiple contacts and/or specific individual locations

ELECTRICAL

- Voltage Rating: 300V
  Based on placement distance
- Current Rating: See matrix below

ENVIRONMENTAL

- Operating Temperature:
  -40ºC to +125ºC

MECHANICAL

- Contact Material: Phosphor Bronze
- Contact Plating: Tin over Nickel
- Durability: 5 Cycles

HOW TO ORDER

00 — **Prefix**: 70 = Contact

9296 — **Series**

001 — **Number of Ways**: 001 = 1

1X2 — **Contact Style**

Code	Contact Location	Wire Insertion Direction	Recommended For Board Type	Wire Gauges*
102	Top Side	Bottom Entry	FR4	22 AWG - 26 AWG
112	Through Board	Top Entry	FR4	22 AWG - 26 AWG
122	Top Side	Bottom Entry	Metal Based	22 AWG - 26 AWG
132	Through Board	Top Entry	Metal Based	22 AWG - 26 AWG

* 26 AWG stranded wires may require tinning to aid insertion.

006 — **Plating Options**: 006 = Pure Tin All Over

RoHS COMPLIANT

CURRENT RATING

22AWG	24AWG	26AWG
8A	6A	5A

Certification: UL File #E90723

The Important Information/Disclaimer is incorporated in the catalog where these specifications came from or available online at www.avx.com/disclaimer/ by reference and should be reviewed in full before placing any order.

70-9296-001-102-006
9296 VERTICAL MOUNT SMT CONTACT
TOP SIDE CONTACT – BOTTOM ENTRY WIRE (FR4 BOARD)

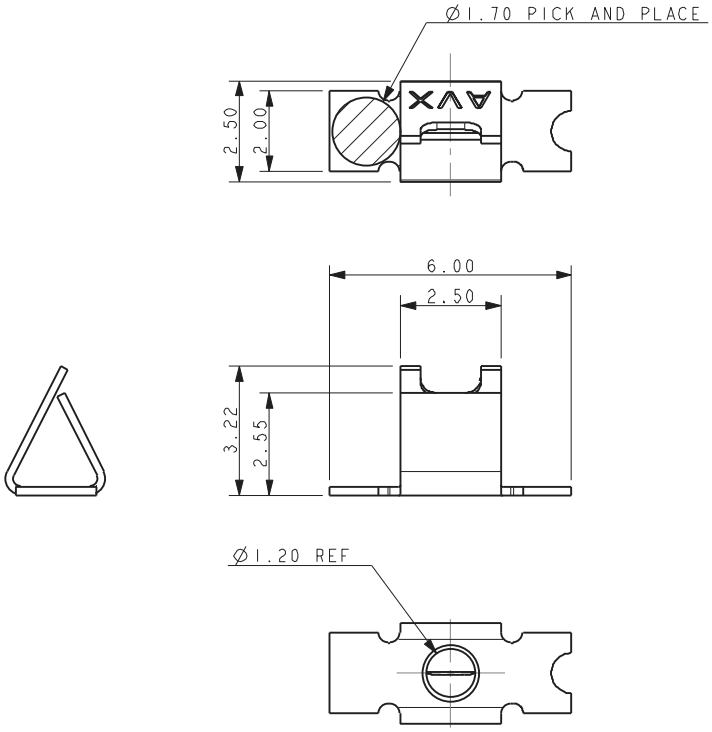

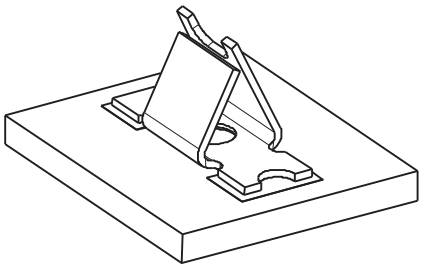

TOP SIDE CONTACT

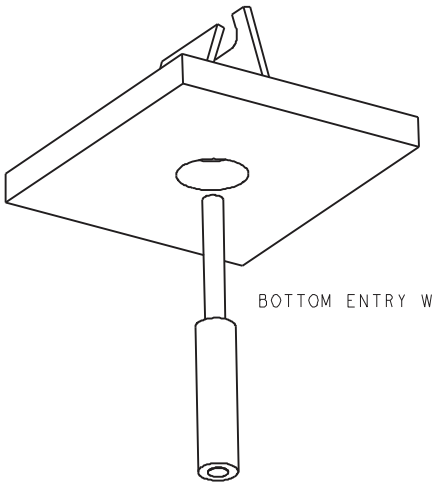

BOTTOM ENTRY WIRE

SUGGESTED PCB LAYOUT

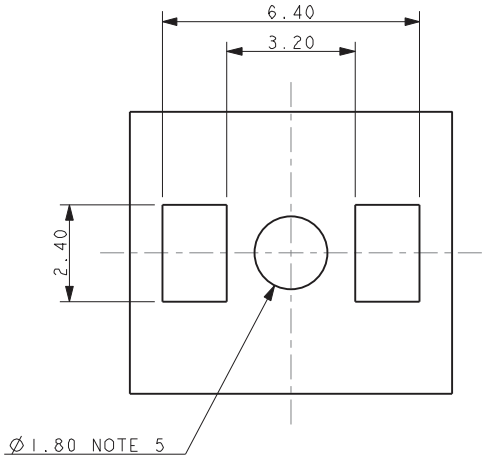

NOTES:
1. CONTACT MOUNTS ON TOP SIDE OF BOARD, WIRE INSERTED FROM UNDERSIDE OF BOARD.
2. STYLE RECOMMENDED FOR FR4 BOARDS WHERE ADDITIONAL CLEARANCE REQUIRED TO CONTACTS AND MOUNTING PADS.
3. FOR FURTHER INFORMATION REFER TO ELCO SPECIFICATION 201-01-161 AND APPLICATION NOTES 201-01-175.
4. MATERIAL: TIN PLATED PHOSPHOR BRONZE.
5. HOLE FOR WIRE INSERTION.
6. PACKING IN TAPE AND REEL, 2000 PIECES PER REEL.
7. FOR WIRE TRIM DETAILS REFER TO PAGE 121.
8. WIRE SIZES REFER TO PAGE 116.
9. GENERAL TOLERANCE ±0.10.
10. UL REFERENCE E90723 (US AND CANADA).

PACKING DETAILS

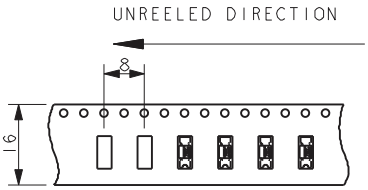

QUANTITY 2000 PER REEL

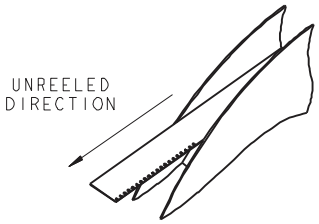

330mm DIAMETER REEL

The Important Information/Disclaimer is incorporated in the catalog where these specifications came from or available online at www.avx.com/disclaimer/ by reference and should be reviewed in full before placing any order.

70-9296-001-112-006
9296 VERTICAL MOUNT SMT CONTACT
THROUGH BOARD CONTACT – TOP ENTRY WIRE (FR4 BOARD)

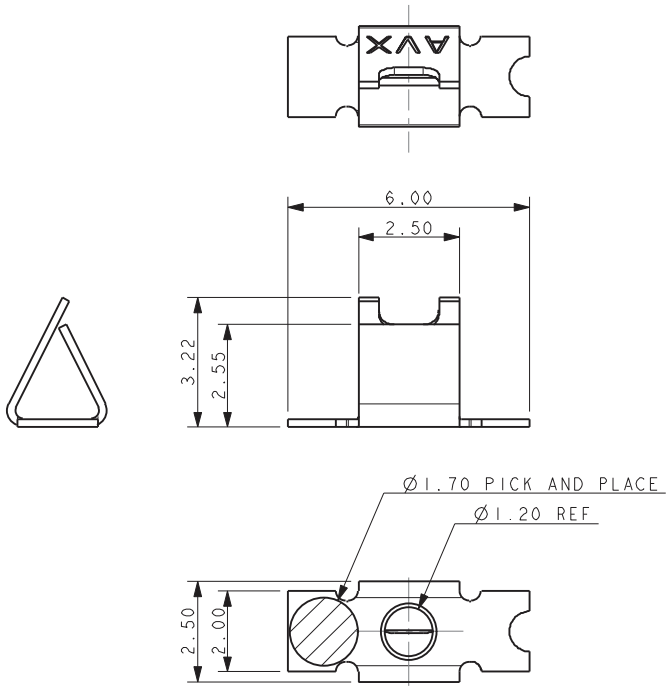

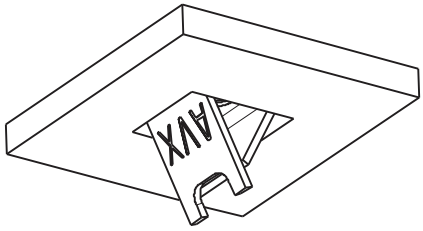

THROUGH BOARD CONTACT

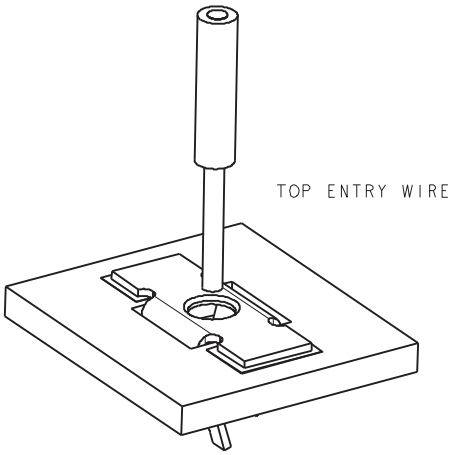

TOP ENTRY WIRE

SUGGESTED PCB LAYOUT

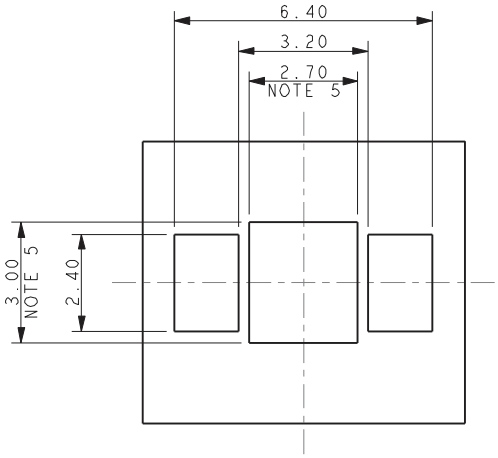

NOTES:
1. CONTACT MOUNTS THROUGH THE BOARD, WIRE INSERTED FROM TOP SIDE OF BOARD.
2. STYLE RECOMMENDED FOR FR4 BOARDS WHERE ADDITIONAL CLEARANCE REQUIRED TO CONTACT AND MOUNTING PADS.
3. FOR FURTHER INFORMATION REFER TO ELCO SPECIFICATION 201-01-161 AND APPLICATION NOTES 201-01-175.
4. MATERIAL: TIN PLATED PHOSPHOR BRONZE.
5. HOLE DIMENSIONS FOR CONTACT.
6. PACKING IN TAPE AND REEL, 2000 PIECES PER REEL.
7. FOR WIRE TRIM DETAILS REFER TO PAGE 121.
8. WIRE SIZES REFER TO PAGE 116.
9. GENERAL TOLERANCE ±0.10.
10. UL REFERENCE E90723 (US AND CANADA).

PACKING DETAILS

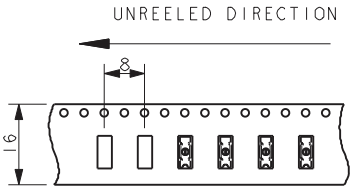

QUANTITY 2000 PER REEL

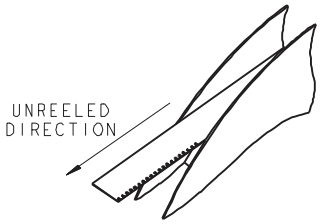

330mm DIAMETER REEL

The Important Information/Disclaimer is incorporated in the catalog where these specifications came from or available online at www.avx.com/disclaimer/ by reference and should be reviewed in full before placing any order.

70-9296-001-122-006
9296 VERTICAL MOUNT SMT CONTACT
TOP SIDE CONTACT – BOTTOM ENTRY WIRE (METAL BOARD)

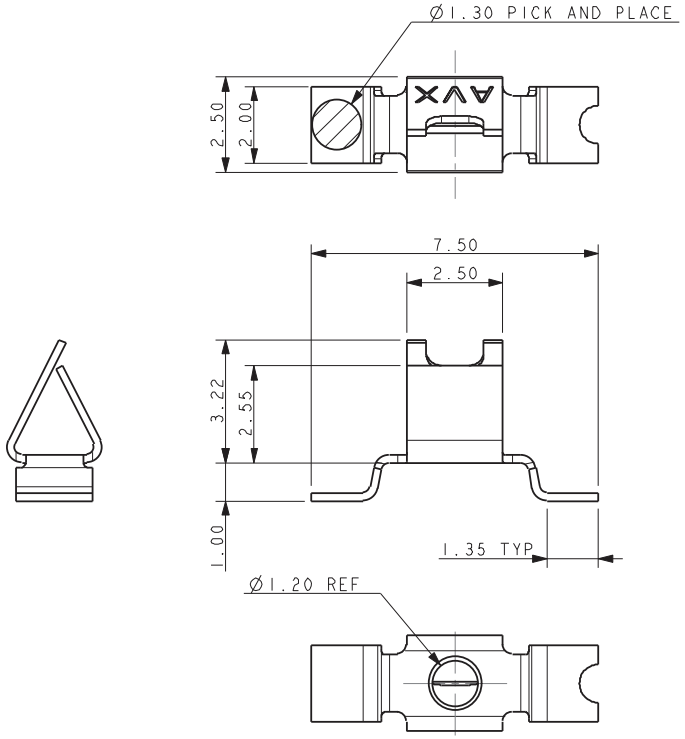

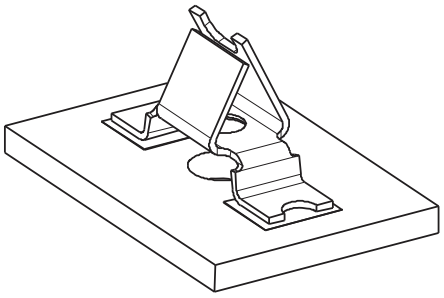

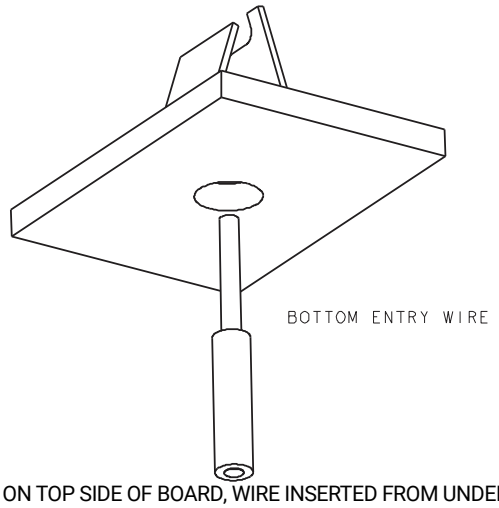

SUGGESTED PCB LAYOUT

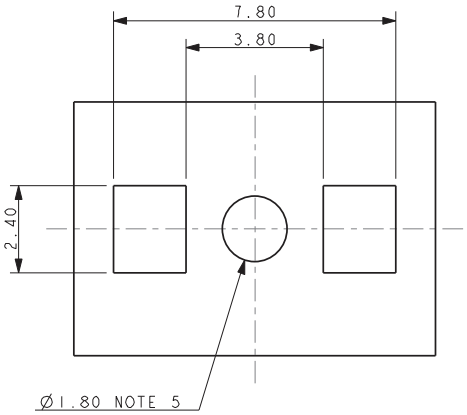

NOTES:
1. CONTACT MOUNTS ON TOP SIDE OF BOARD, WIRE INSERTED FROM UNDERSIDE OF BOARD.
2. STYLE RECOMMENDED FOR METAL CLAD BOARDS WHERE ADDITIONAL CLEARANCE REQUIRED TO CONTACTS AND MOUNTING PADS.
3. FOR FURTHER INFORMATION REFER TO ELCO SPECIFICATION 201-01-161 AND APPLICATION NOTES 201-01-150.
4. MATERIAL: TIN PLATED PHOSPHOR BRONZE.
5. HOLE FOR WIRE INSERTION.
6. PACKING IN TAPE AND REEL, 1600 PIECES PER REEL.
7. FOR WIRE TRIM DETAILS REFER TO PAGE 121.
8. WIRE SIZES REFER TO PAGE 116.
9. GENERAL TOLERANCE ±0.10.
10. UL REFERENCE E90723 (US AND CANADA).

PACKING DETAILS

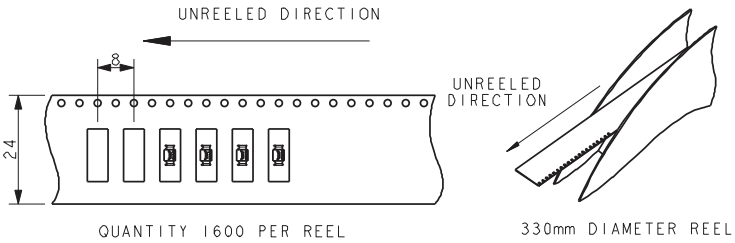

The Important Information/Disclaimer is incorporated in the catalog where these specifications came from or available online at www.avx.com/disclaimer/ by reference and should be reviewed in full before placing any order.

70-9296-001-132-006
9296 VERTICAL MOUNT SMT CONTACT
THROUGH BOARD CONTACT – TOP ENTRY WIRE (METAL BOARD)

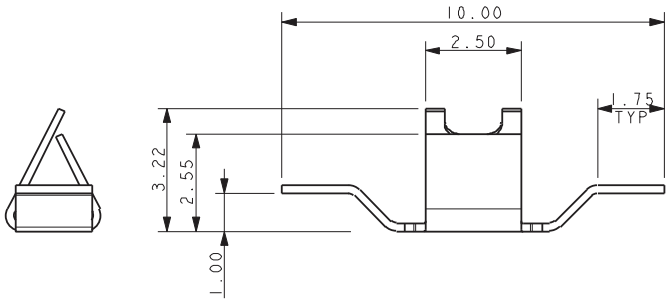

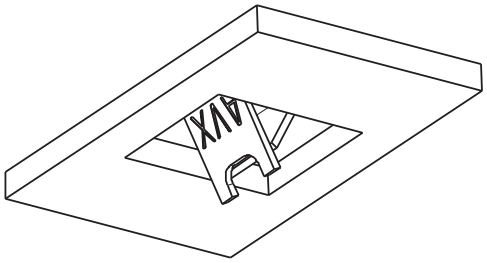

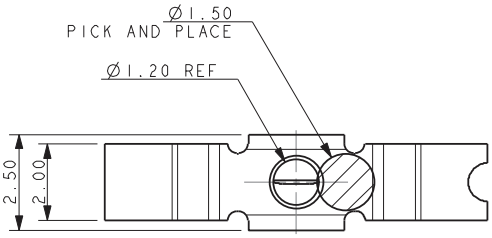

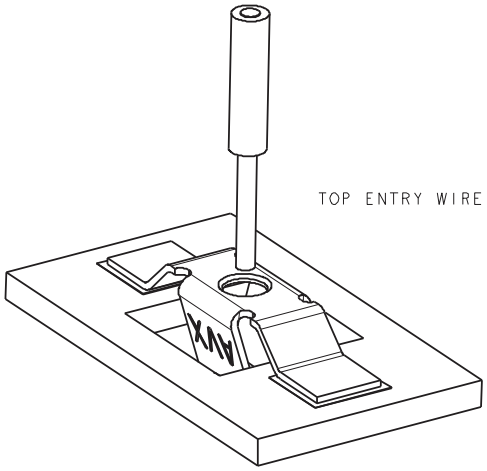

SUGGESTED PCB LAYOUT

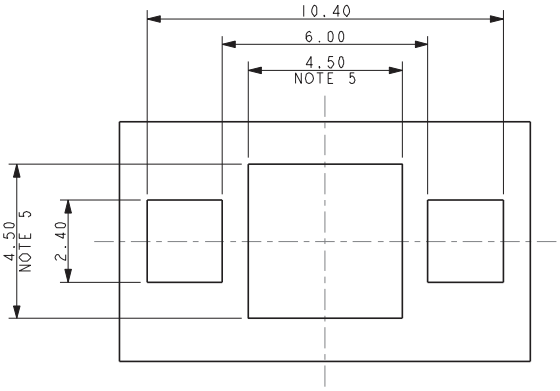

NOTES:
1. CONTACT MOUNTS ON TOP SIDE OF BOARD, WIRE INSERTED FROM UNDERSIDE OF BOARD.
2. STYLE RECOMMENDED FOR METAL CLAD BOARDS WHERE ADDITIONAL CLEARANCE REQUIRED TO CONTACTS AND MOUNTING PADS.
3. FOR FURTHER INFORMATION REFER TO ELCO SPECIFICATION 201-01-161 AND APPLICATION NOTES 201-01-175.
4. MATERIAL: TIN PLATED PHOSPHOR BRONZE.
5. HOLE FOR WIRE INSERTION.
6. PACKING IN TAPE AND REEL, 2000 PIECES PER REEL.
7. FOR WIRE TRIM DETAILS REFER TO PAGE 121.
8. WIRE SIZES REFER TO PAGE 116.
9. GENERAL TOLERANCE ±0.10.
10. UL REFERENCE E90723 (US AND CANADA).

PACKING DETAILS

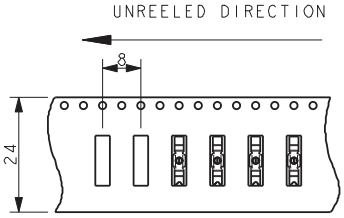

QUANTITY 2000 PER REEL

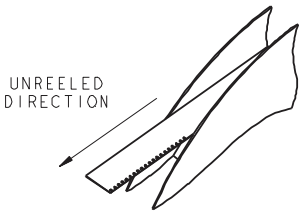

330mm DIAMETER REEL

The Important Information/Disclaimer is incorporated in the catalog where these specifications came from or available online at www.avx.com/disclaimer/ by reference and should be reviewed in full before placing any order.

9296 VERTIAL MOUNT SMT CONTACT WIRE TRIM DETAILS

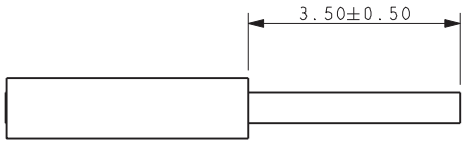

WIRE STRIP LENGTH, ALL STYLES

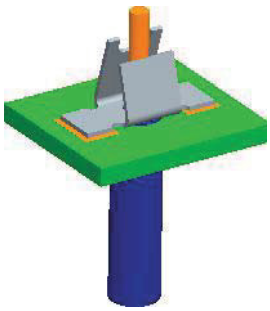

70-9296-001-103-006

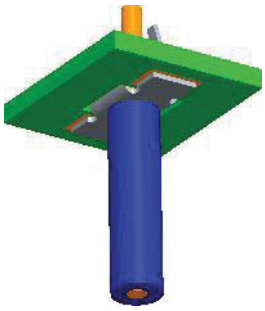

70-9296-001-113-006

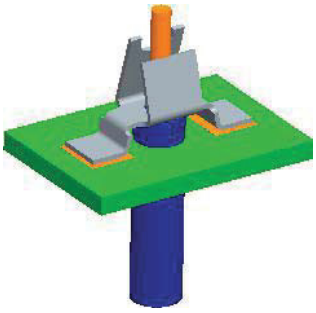

70-9296-001-123-006

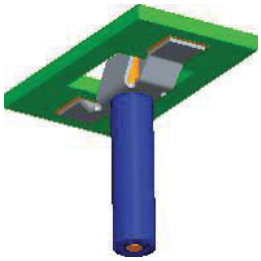

70-9296-001-133-006

NOTES:
1. FOR FULL ASSEMBLY PROCEDURE REFER TO APPLICATION NOTES 201-01-175.
2. THE SAME WIRE STRIP LENGTH APPLIES TO ALL STYLES.
3. STRANDED WIRES SHOULD BE TWISTED TO PREVENT SINGLE STRANDS BECOMING DETACHED WHEN INSERTED INTO CONTACT.
4. SUITABLE FOR SOLID AND STRANDED WIRES 22AWG, 24AWG AND 26AWG. STRANDED WIRES 26AWG MAY REQUIRE TINNING TO AID INSERTION.

The Important Information/Disclaimer is incorporated in the catalog where these specifications came from or available online at www.avx.com/disclaimer/ by reference and should be reviewed in full before placing any order.

POKE-HOME: LOW PROFILE HORIZONTAL 20-26 AWG: 9296-200

General Information

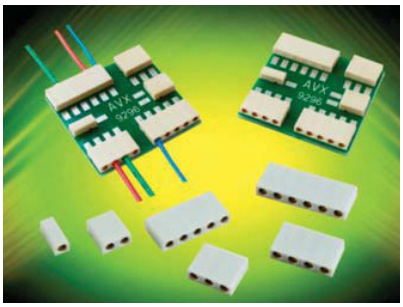

The new 9296 series connector provides a quick and reliable wire-to- board termination in a sleek 3.0mm pitch by 2.5mm high SMT package for a broad range of industrial and commercial applications. With almost every product on the market having to deal with a small number of discrete wires connecting components to a PCB, the 9296 connector series meets this challenge by simply stripping the wire and inserting them into a 1 to 6 position connector. This makes the connector very cost effective and termination friendly within the factory as well as in the field by electrical installers.

Developed for harsh industrial applications, the connector integrates the already proven 2mm dual beam poke-home contact into a connector housing. The high spring force Phosphor Bronze contact accepts a wide range (20-26AWG solid or stranded) of wire to accommodate any wire combination within a single connector.

APPLICATIONS

- Machine Controls: motors, drives, solenoids, sensors, fans and pumps
- Commercial Buildings: controls, security, fire and sensors
- Smart Grid: meters, breakers and panels
- SSL/LED: bulbs, fixtures, signage and streetlights
- Application notes: refer to 201-01-167

FEATURES AND BENEFITS

- Simple strip and poke-home wire insertion with easy twist and pull wire extraction
- 2.5mm height achieves the lowest height possible for this AWG range
- Accepts 20-26 AWG solid and stranded wires
- High spring force dual beam box contact provides maximum mechanical stability and wire retention
- UL approved
- Halogen free

ELECTRICAL

- Current Rating: See matrix below
- Voltage Rating: 300 VAC

ENVIRONMENTAL

- Operating Temperature: -40°C to +130°C

MECHANICAL

- Insulator Material: Glass-Filled Nylon 46; UL94V0
- Contact Material: Phosphor Bronze
- Plating: Tin over Nickel
- Durability: 3 Cycles

HOW TO ORDER

00 — **Prefix**

9296 — **Series**

00X — **Number of Ways**
001 = 1
002 = 2
003 = 3
004 = 4
005 = 5
006 = 6

2X — **Description**
20 = Horizontal SMT Mount Poke Home Connector
21 = Horizontal SMT Mount Poke Home Connector for pass through mating pins

2 — **Wire Gauge Size**
20AWG to 26AWG
Max ø 1.60mm

X — **Insulator Color**
All Sizes
9 = UL White (Standard)
8 = UL Black (Special Order)

One Way Only (Special Order)
2 = UL Brown
3 = UL Blue
4 = UL Yellow
5 = UL Red
6 = UL Green
7 = UL Orange

X — **Halogen Free**
0 = No
1 = Yes

6 — **Plating Options**
6 = Pure Tin over Nickel

RoHS COMPLIANT

CURRENT RATING

	20AWG	22AWG	24AWG	26AWG
UL	8A	7A	6A	5A
cUL	6A	5A	3.75A	3.75A

Certification: UL File #E90723

The Important Information/Disclaimer is incorporated in the catalog where these specifications came from or available online at www.avx.com/disclaimer/ by reference and should be reviewed in full before placing any order.

POKE-HOME: LOW PROFILE HORIZONTAL 20-26 AWG: 9296-200

1 Position

9296 HORIZONTAL MOUNT POKE HOME CONNECTOR – 1 WAY

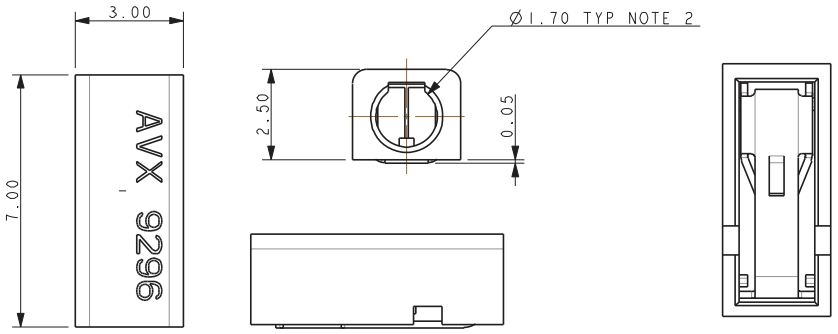

NOTES:

1. HORIZONTAL SMT MOUNT 1 WAY POKE HOME CONNECTOR. FOR FURTHER DETAILS REFER TO PRODUCT SPECIFICATION 201-01-166 AND APPLICATION NOTES 201-01-167.
2. SUITABLE FOR WIRES 20AWG TO 26AWG, MAXIMUM INSULATION 1.60MM DIAMETER.
3. INSULATOR: NYLON 46, GLASS FILLED, UL94 V-O, COLOR SEE PAGE 122.
4. CONTACT: TIN PLATED COPPER ALLOY.
5. PACKING IN TAPE AND REEL, QTY PER REEL 2000, 330MM REEL.
6. GENERAL TOLERANCE ±0.20.
7. OUTLINE OF CONNECTOR.
8. UL REFERENCE E90723 (US AND CANADA).

SUGGESTED PCB LAYOUT

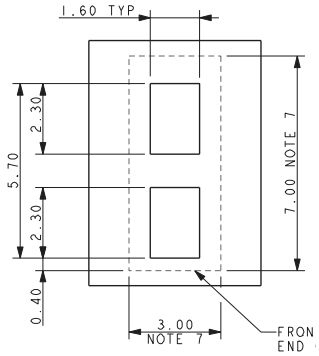

PACKING DETAILS

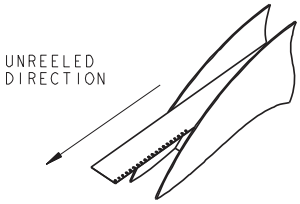

330mm DIAMETER REEL

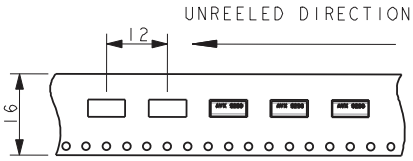

QUANTITY PER REEL 2000

The Important Information/Disclaimer is incorporated in the catalog where these specifications came from or available online at www.avx.com/disclaimer/ by reference and should be reviewed in full before placing any order.

9296 HORIZONTAL MOUNT POKE HOME CONNECTOR – 2 WAY

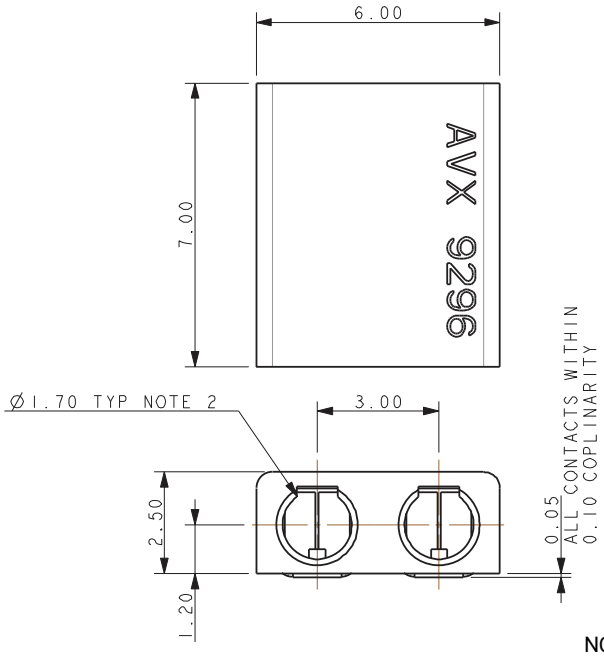

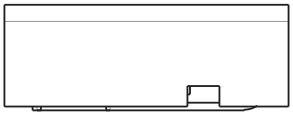

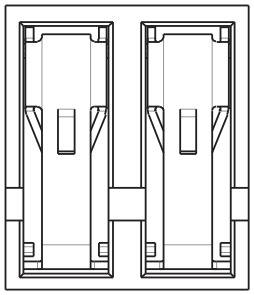

NOTES:

1. HORIZONTAL SMT MOUNT 2 WAY POKE HOME CONNECTOR. FOR FURTHER DETAILS REFER TO PRODUCT SPECIFICATION 201-01-166 AND APPLICATION NOTES 201-01-167.
2. SUITABLE FOR WIRES 20AWG TO 26AWG, MAXIMUM INSULATION 1.60MM DIAMETER.
3. INSULATOR: NYLON 46, GLASS FILLED, UL94 V-O, COLOR SEE PAGE 122.
4. CONTACT: TIN PLATED COPPER ALLOY.
5. PACKING IN TAPE AND REEL, QTY PER REEL 2000, 330MM REEL.
6. GENERAL TOLERANCE ±0.20.
7. OUTLINE OF CONNECTOR.
8. UL REFERENCE E90723 (US AND CANADA).

SUGGESTED PCB LAYOUT

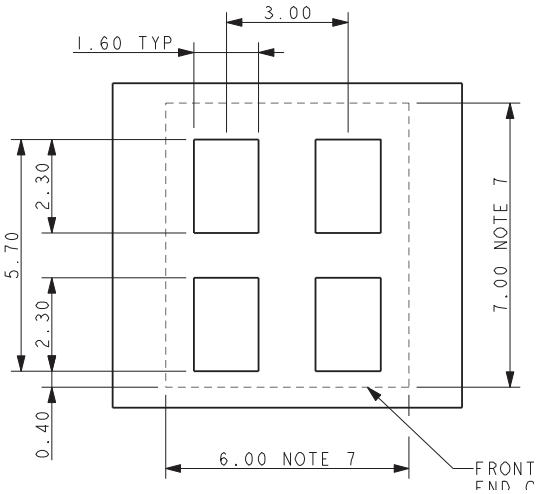

PACKING DETAILS

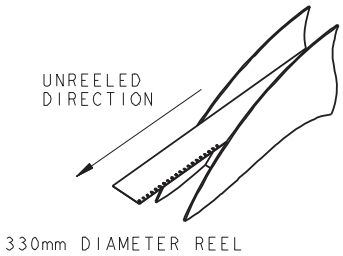

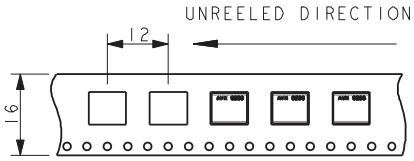

QUANTITY PER REEL 2000

The Important Information/Disclaimer is incorporated in the catalog where these specifications came from or available online at www.avx.com/disclaimer/ by reference and should be reviewed in full before placing any order.

9296 HORIZONTAL MOUNT POKE HOME CONNECTOR – 3 WAY

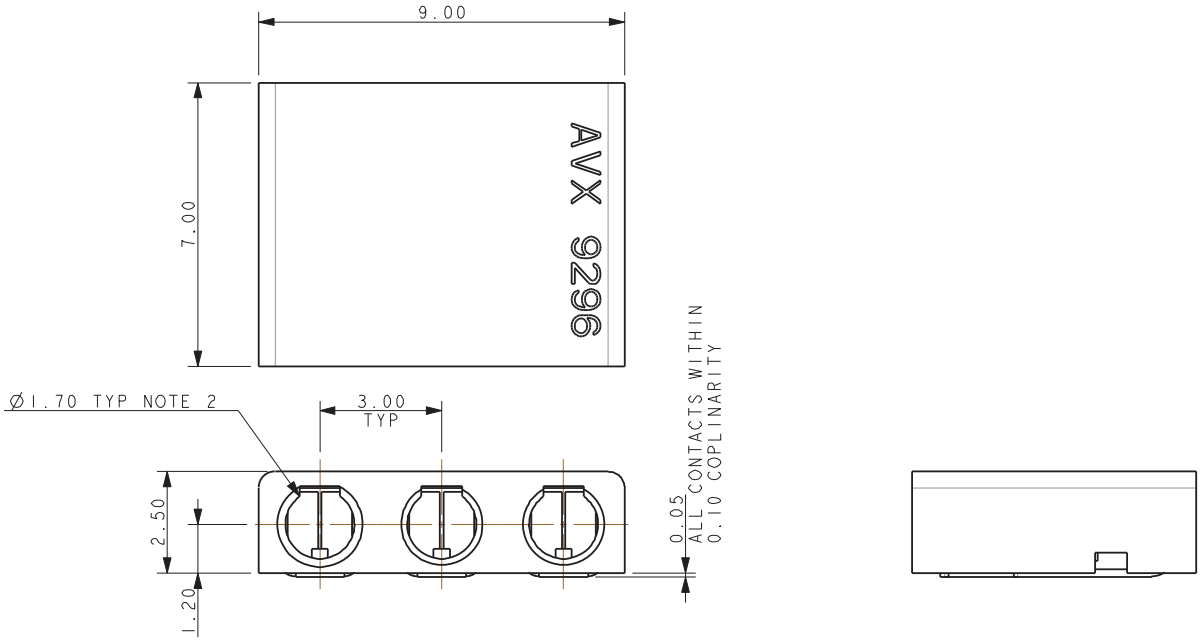

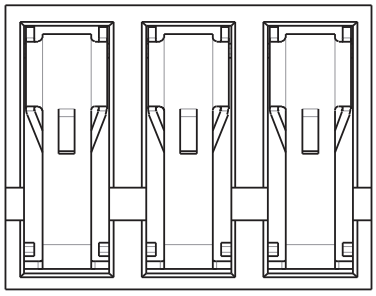

NOTES:

1. HORIZONTAL SMT MOUNT 3 WAY POKE HOME CONNECTOR. FOR FURTHER DETAILS REFER TO PRODUCT SPECIFICATION 201-01-166 AND APPLICATION NOTES 201-01-167.
2. SUITABLE FOR WIRES 20AWG TO 26AWG, MAXIMUM INSULATION 1.60MM DIAMETER.
3. INSULATOR: NYLON 46, GLASS FILLED, UL94 V-O, COLOR SEE PAGE 122.
4. CONTACT: TIN PLATED COPPER ALLOY.
5. PACKING IN TAPE AND REEL, QTY PER REEL 2000, 330MM REEL.
6. GENERAL TOLERANCE ±0.20.
7. OUTLINE OF CONNECTOR.
8. UL REFERENCE E90723 (US AND CANADA).

SUGGESTED PCB LAYOUT

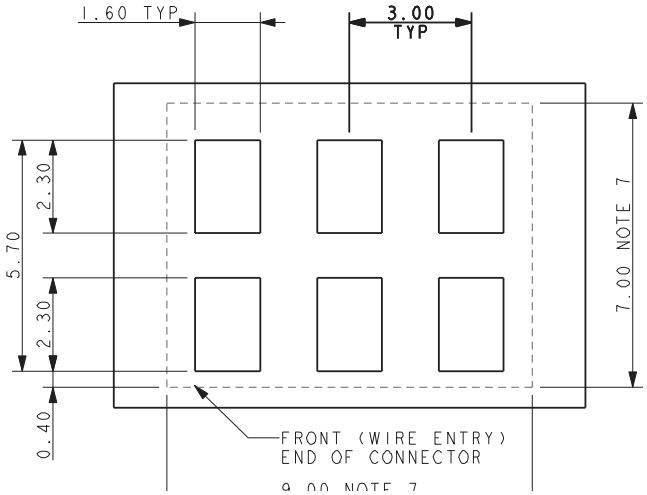

PACKING DETAILS

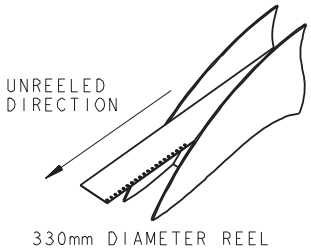

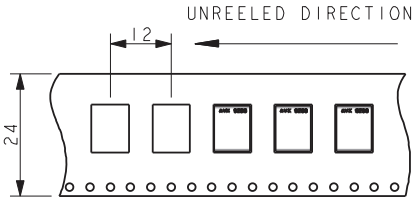

QUANTITY PER REEL 2000

9296 HORIZONTAL MOUNT POKE HOME CONNECTOR – 4 WAY

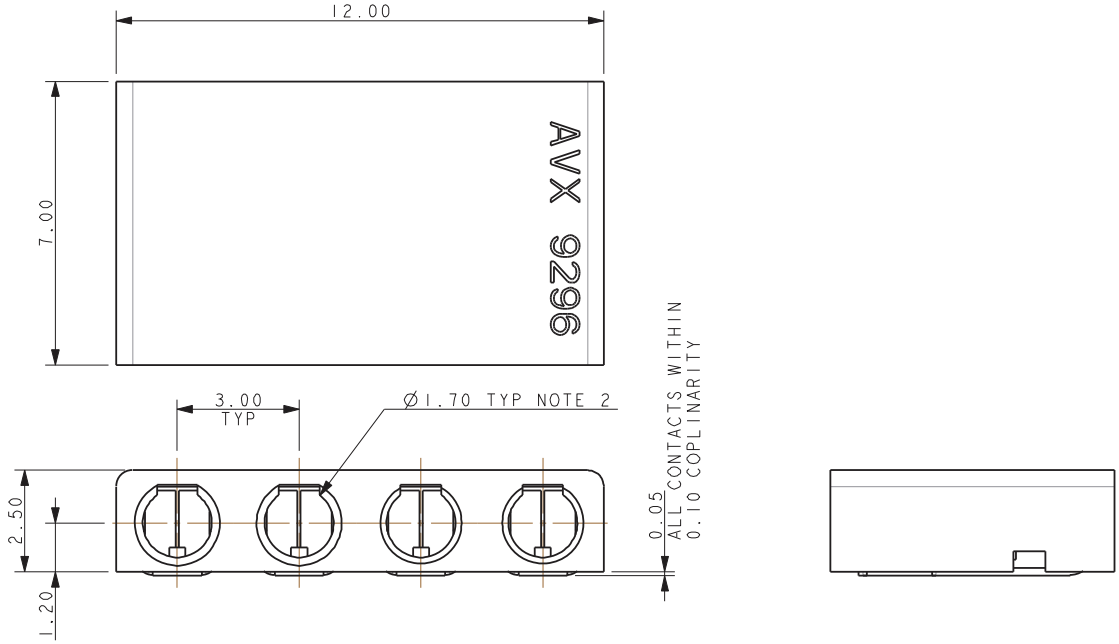

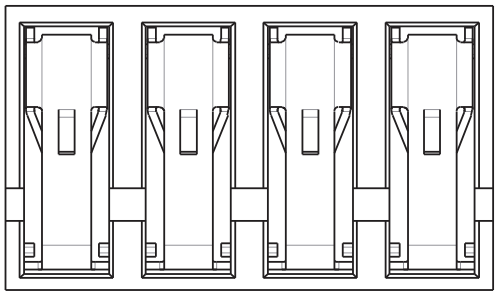

NOTES:

1. HORIZONTAL SMT MOUNT 4 WAY POKE HOME CONNECTOR. FOR FURTHER DETAILS REFER TO PRODUCT SPECIFICATION 201-01-166 AND APPLICATION NOTES 201-01-167.
2. SUITABLE FOR WIRES 20AWG TO 26AWG, MAXIMUM INSULATION 1.60MM DIAMETER.
3. INSULATOR: NYLON 46, GLASS FILLED, UL94 V-O, COLOR SEE PAGE 122.
4. CONTACT: TIN PLATED COPPER ALLOY.
5. PACKING IN TAPE AND REEL, QTY PER REEL 2000, 330MM REEL.
6. GENERAL TOLERANCE ±0.20.
7. OUTLINE OF CONNECTOR.
8. UL REFERENCE E90723 (US AND CANADA).

SUGGESTED PCB LAYOUT

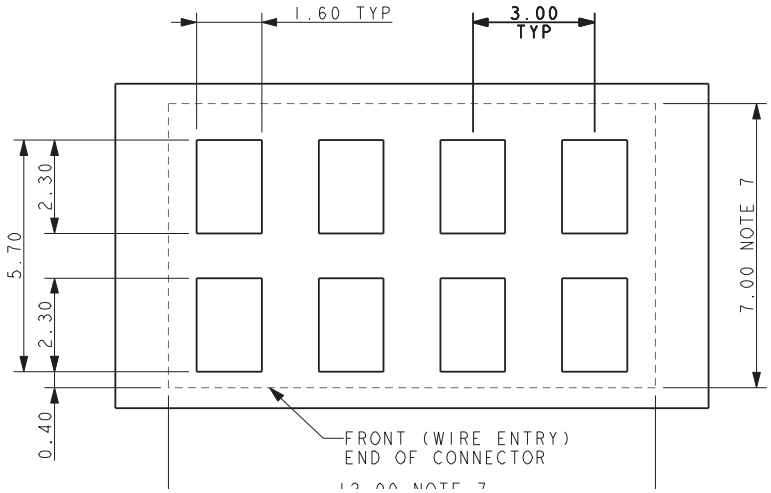

PACKING DETAILS

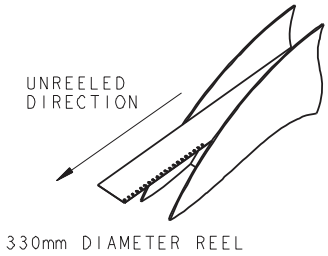

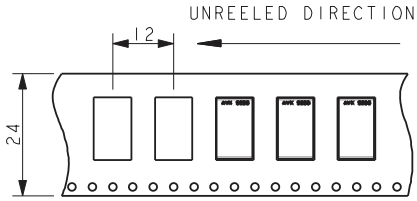

QUANTITY PER REEL 2000

The Important Information/Disclaimer is incorporated in the catalog where these specifications came from or available online at www.avx.com/disclaimer/ by reference and should be reviewed in full before placing any order.

POKE-HOME: LOW PROFILE HORIZONTAL 20-26 AWG: 9296-200

5 Position

9296 HORIZONTAL MOUNT POKE HOME CONNECTOR – 5 WAY

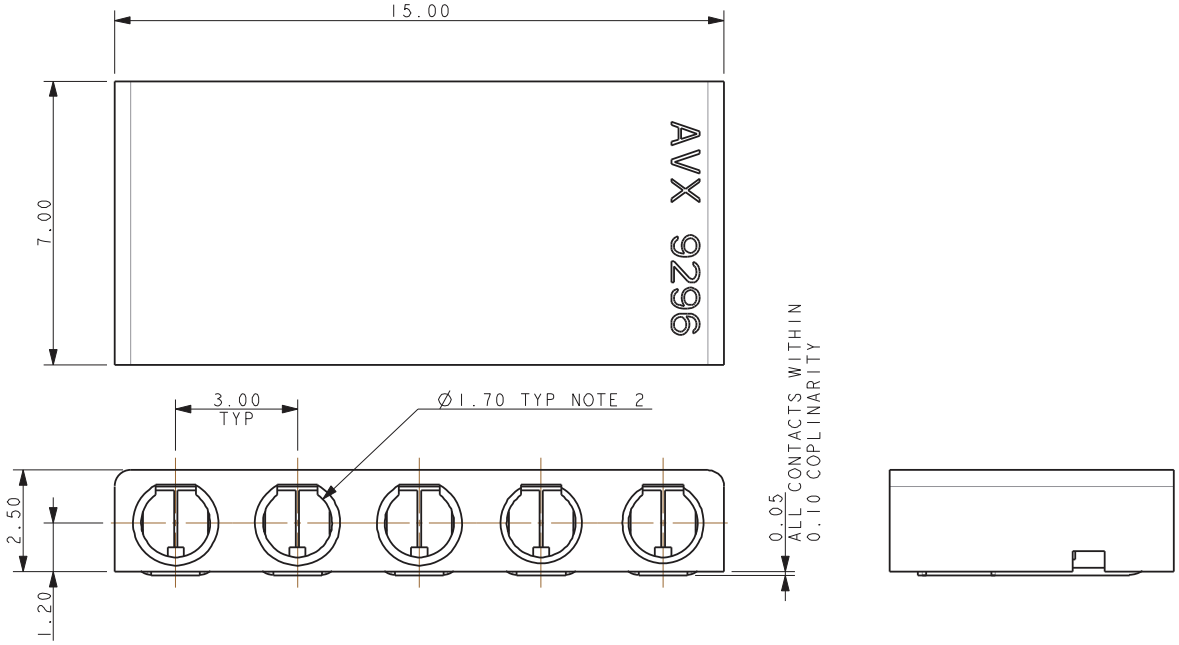

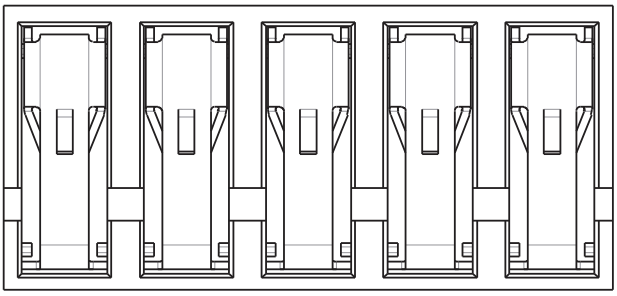

NOTES:

1. HORIZONTAL SMT MOUNT 5 WAY POKE HOME CONNECTOR. FOR FURTHER DETAILS REFER TO PRODUCT SPECIFICATION 201-01-166 AND APPLICATION NOTES 201-01-167.
2. SUITABLE FOR WIRES 20AWG TO 26AWG, MAXIMUM INSULATION 1.60MM DIAMETER.
3. INSULATOR: NYLON 46, GLASS FILLED, UL94 V-O, COLOR SEE PAGE 122.
4. CONTACT: TIN PLATED COPPER ALLOY.
5. PACKING IN TAPE AND REEL, QTY PER REEL 2000, 330MM REEL.
6. GENERAL TOLERANCE ±0.20.
7. OUTLINE OF CONNECTOR.
8. UL REFERENCE E90723 (US AND CANADA).

SUGGESTED PCB LAYOUT

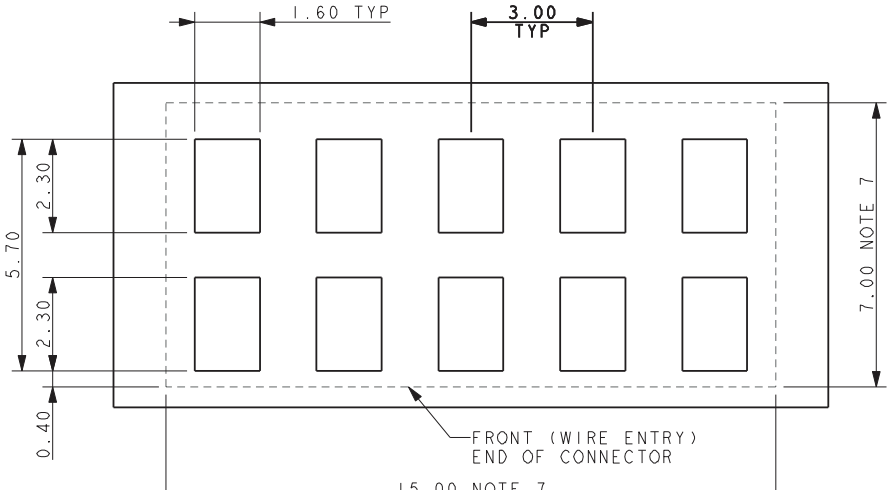

PACKING DETAILS

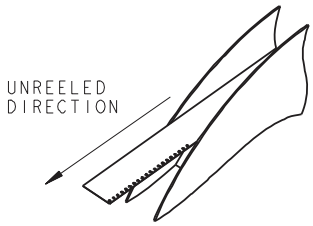

330mm DIAMETER REEL

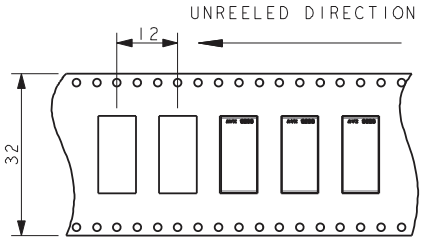

QUANTITY PER REEL 2000

9296 HORIZONTAL MOUNT POKE HOME CONNECTOR – 6 WAY

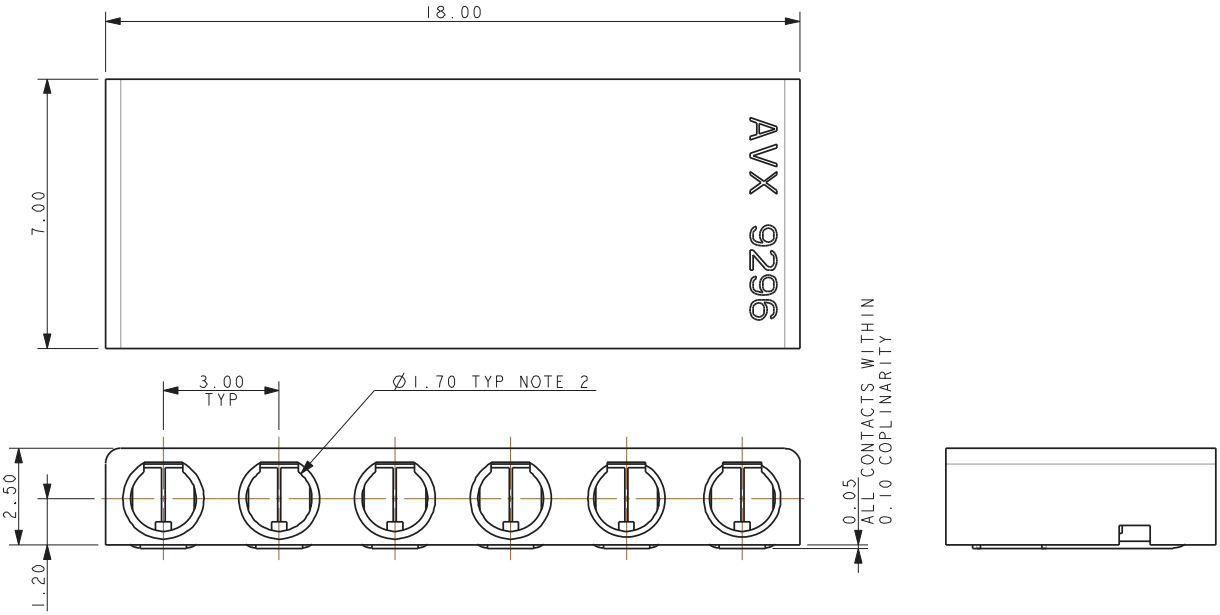

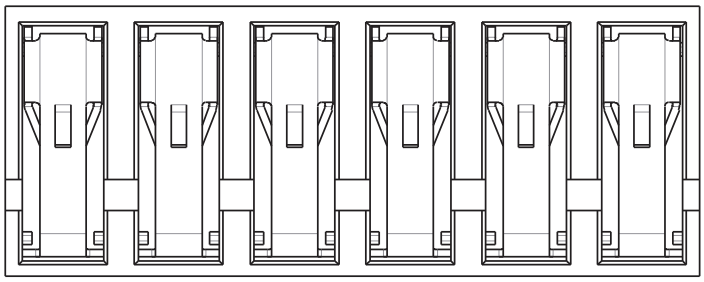

NOTES:

1. HORIZONTAL SMT MOUNT 6 WAY POKE HOME CONNECTOR. FOR FURTHER DETAILS REFER TO PRODUCT SPECIFICATION 201-01-166
   AND APPLICATION NOTES 201-01-167.
2. SUITABLE FOR WIRES 20AWG TO 26AWG, MAXIMUM INSULATION 1.60MM DIAMETER.
3. INSULATOR: NYLON 46, GLASS FILLED, UL94 V-O, COLOR SEE PAGE 122.
4. CONTACT: TIN PLATED COPPER ALLOY.
5. PACKING IN TAPE AND REEL, QTY PER REEL 2000, 330MM REEL.
6. GENERAL TOLERANCE ±0.20.
7. OUTLINE OF CONNECTOR.
8. UL REFERENCE E90723 (US AND CANADA).

SUGGESTED PCB LAYOUT

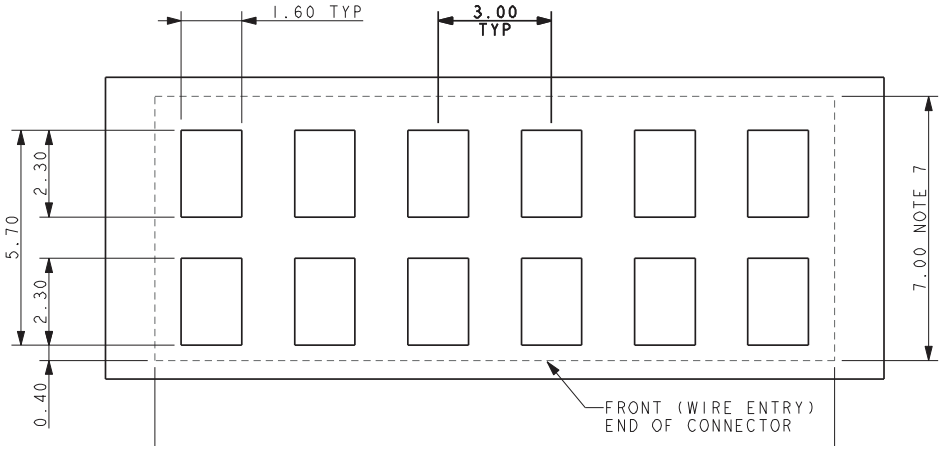

PACKING DETAILS

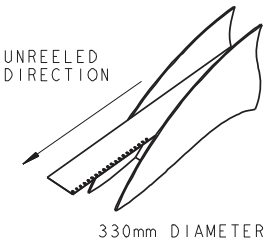

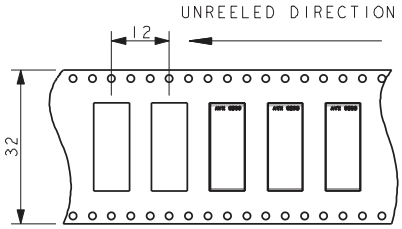

QUANTITY PER REEL 2000

The Important Information/Disclaimer is incorporated in the catalog where these specifications came from or available online at www.avx.com/disclaimer/ by reference and should be reviewed in full before placing any order.

9296 HORIZONTAL MOUNT POKE HOME CONNECTOR – ASSEMBLY

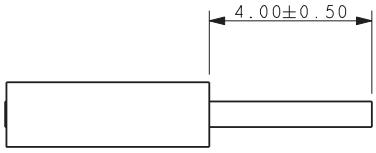

WIRE STRIP LENGTH

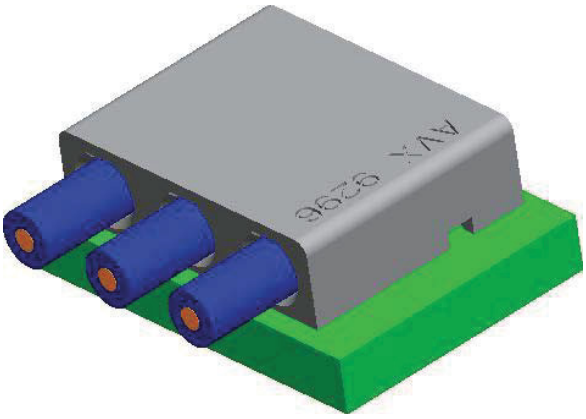

REFER TO APPLICATION NOTES 201-01-167
FOR FULL ASSEMBLY PROCEDURE

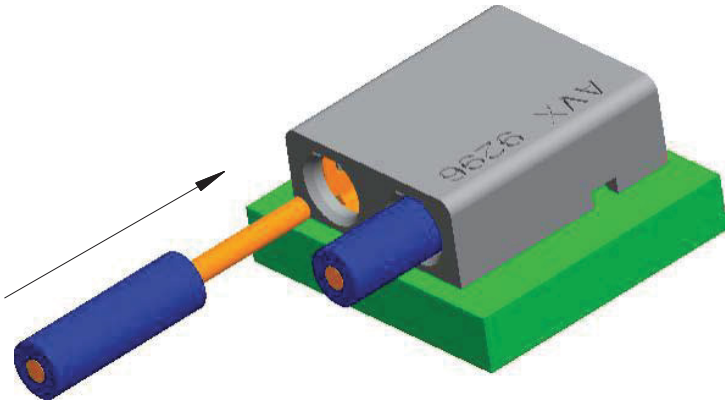

RF COAXIAL IDC

00-6791

GENERAL DESCRIPTION

Designed to simplify the connection process, the new 6791 series wire to board connectors for coaxial cables enable simple termination with one press. Expanded the proven-reliable IDC (Insulation displacement connector) from signal/power transmission to high frequency transmission field up to 6Ghz, the IDC contact pierces the jacket and insulation of the cable and makes direct contact with the strands and conductor of the wire at the same time. Comparing with direct soldering the soldering quality is no more depending on operator's skill which is hard to be unified and controlled. Hand soldering is now not preferred/allows in automotive field. Comparing with costly traditional 2-piece solution which is generally taller than 10mm, the new 6791 Series offers a cost-effective solution and the on board height in less than 5mm after the cap is pressed. Process to prepare coaxial cable with a 2-piece connector is time consuming and costly, with the launch of the new 6791 series the process is nowsimplified and the cost is reduced.

APPLICATIONS

- The connector comes in multiple types for different coaxial cables.
- Small package size and mechanical strength allows usage in automotive and industrial antenna applications
- Reference Application Notes 201-01-214

ELECTRICAL

- Current Rating: 0.5 Amps (Current limit is cable dependent)
- Voltage Rating: 125Vac

ENVIRONMENTAL

- Operating Temperature: -40ºC to +105ºC

FEATURES AND BENEFITS

- Can replace costly traditional RF connector systems
- Good RF performance up to 6GHz
- Mechanically strong with peel off force up to 70N
- Easy assembly process with ability to automate

MECHANICAL

- Insulator Material: Glass-Filled Nylon 46; UL94V-0
- Contact Material: Copper Alloy
- Plating: Lead-Free Tin Over Nickel

HOW TO ORDER

00	6791	001	00X	005
Prefix	Series	No. of Ways 001 = 1	Description 001 = 50Ω: Outer Jacket 2.33mm-2.60mm 003 = 50Ω: Outer Jacket 2.70mm-3.10mm See comparison of cable dimensions in below chart	Plating

RoHS COMPLIANT

IDC COAX CABLE SIZE

Component	Diameter (mm)			
	-001		-003	
	Lower Limit	Upper Limit	Lower Limit	Upper Limit
Conductor	0.43	0.54	0.46	0.57
Dielectric	1.44	1.68	1.45	1.70
Braid Shield	1.84	2.08	1.85	2.10
Jacket	2.33	2.60	2.70	3.10

The Important Information/Disclaimer is incorporated in the catalog where these specifications came from or available online at www.avx.com/disclaimer/ by reference and should be reviewed in full before placing any order.

00 6791 001 001 005

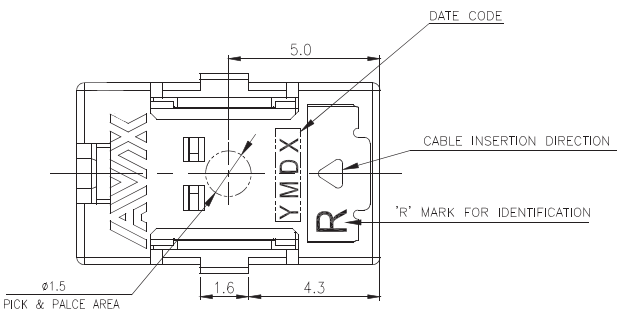

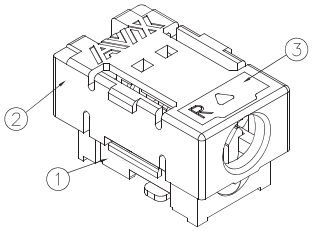

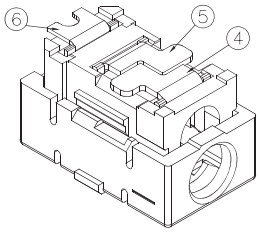

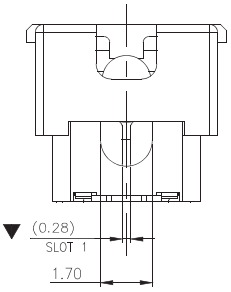

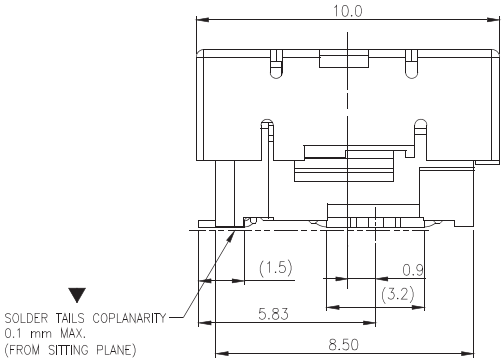

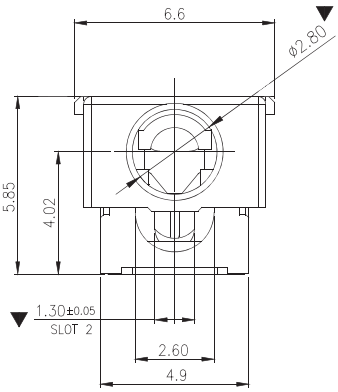

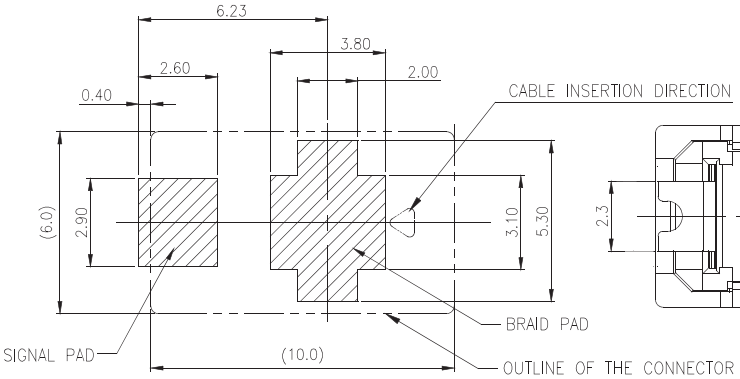

RECOMMENDED PCB LAYOUT
NOTE: TOLERANCE FOR PCB LAYOUT IS ±0.05mm

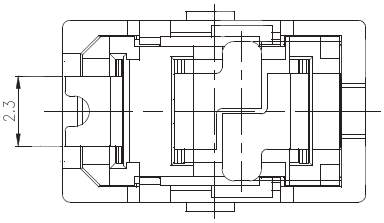

NOTES:
1. VOLTAGE RATING: 125V.
2. OPERATING TEMPERATURE: −40°C TO +105°C.
3. FOR REFLOW SOLDERING LEAD−FREE PROCESS.
4. SOLDERING HEAT RESISTANCE REFLOW SOLDERING 260°C.
5. RECOMMENDED PRESSING STOP HEIGHT AS 3.9±0.2mm.
6. ALLOW CABLE INSERT TOLERANCE: 0.3mm MAX.
7. CRITICAL DIMENSION: ▼
8. GENERAL TOLERANCE ±0.20mm.

ITEM	DESCRIPTION	MATERIAL	FINISH	Q'TY	NOTE
⑥	SIGNAL CONTACT	COPPER ALLOY	Tin OVERALL, NICKEL UNDERPLATED	1	
⑤	BRAID CONTACT(2)	COPPER ALLOY	Tin OVERALL, NICKEL UNDERPLATED	1	
④	BRAID CONTACT(1)	COPPER ALLOY	Tin OVERALL, NICKEL UNDERPLATED	1	
③	SUPPORT PLATE	STAINLESS STEEL		1	
②	CAP	PA−46	UL94HB,BLACK	1	
①	HOUSING	PA−46	UL94HB,BLACK	1	

The Important Information/Disclaimer is incorporated in the catalog where these specifications came from or available online at www.avx.com/disclaimer/ by reference and should be reviewed in full before placing any order.

00 6791 001 001 005

CONSTRUCTION

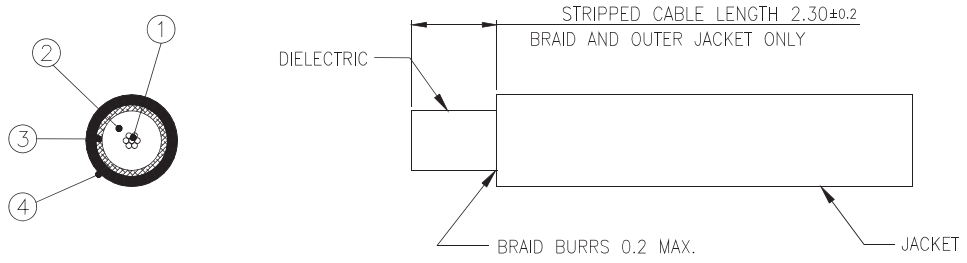

NOTE: JACKET STRIP OD DEFORMED MUST BE THAN LESS ø2.75mm AFTER CUT OFF.

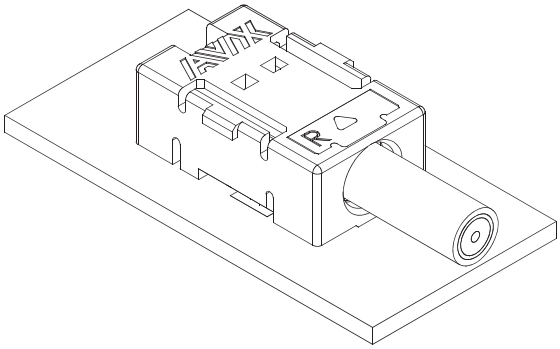

APPLICABLE COAXIAL CABLE DIMENSIONS:

COMPONENT	DIAMETER (mm)	
	LOWER LIMIT	UPPER LIMIT
(1) CONDUCTOR	ø0.43	ø0.54
(2) DIELECTRIC	ø1.44	ø1.68
(3) BRAID SHIELD	ø1.84	ø2.08
(4) JACKET	ø2.33	ø2.60

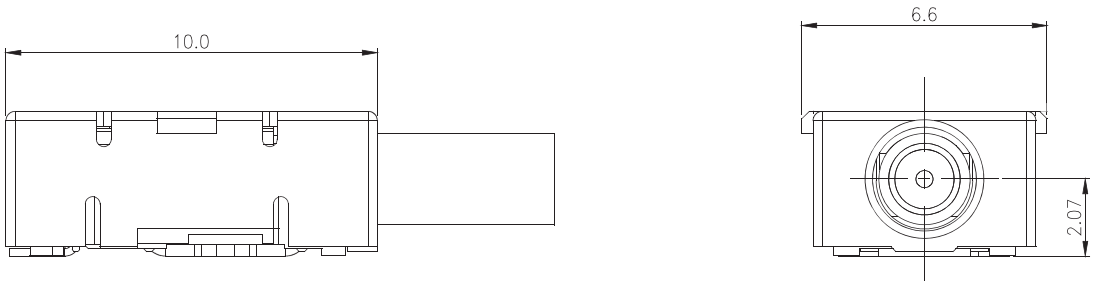

WIRED CONNECTOR

The Important Information/Disclaimer is incorporated in the catalog where these specifications came from or available online at www.avx.com/disclaimer/ by reference and should be reviewed in full before placing any order.

00 6791 001 001 005

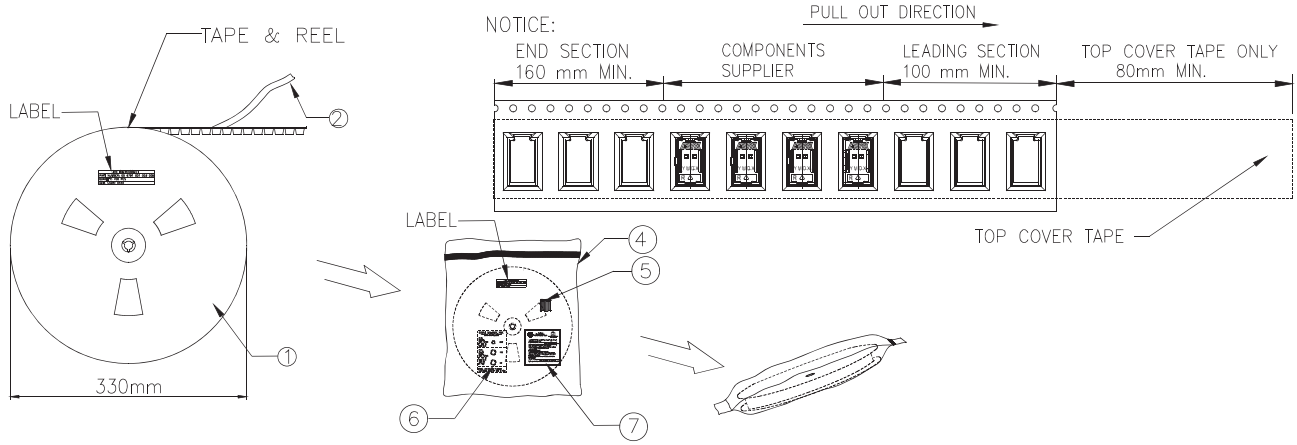

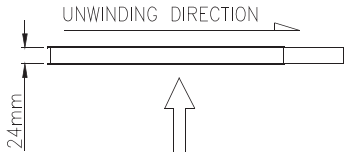

NOTE :

1.MATERIAL :

REEL: BLUE PS

CARRIER: BLACK PS

COVER TAPE: TRANSPARENT PE

2.DIMENSION :

REEL SIZE:

DIA=330mm, W=24mm

3.QUANTITY:

850PCS/REEL

4.HUMIDITY REQUIREMENTS FOLLOW MSL LEVEL 3

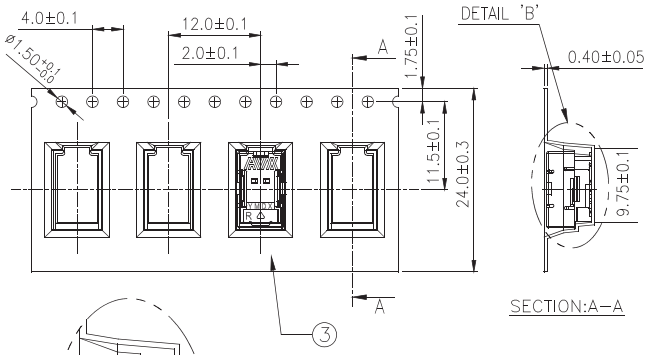

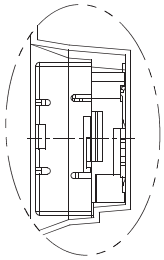

DETAIL'B';SCALE=5:1

REEL LABEL

AVX INTERCONNECT
PART NUMBER: 00 6791 001 001 005
QUANTITY: 850 PCS
DATE CODE: XXXX

A	165°~180°
F	35–125g

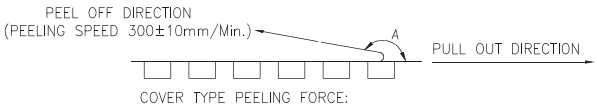

ITEM	DESCRIPTIONs	MATERIAL	FINISH	Q'TY	NOTE	COLOR
⑦	CAUTION LABEL	——	——	1	——	——
⑥	HUMIDITY INDICATOR CARD	——	——	1	——	——
⑤	DESICCANT	——	20g/Bag	1	——	——
④	ESD BAG	FOIL	VACUUM SEAL	1	——	——
③	ESD CARRIER TAPE	PS	——	1	——	——
②	ESD COVER TAPE	PE	——	1	——	——
①	REEL ASS'Y	PS	——	1	——	BLUE

The Important Information/Disclaimer is incorporated in the catalog where these specifications came from or available online at www.avx.com/disclaimer/ by reference and should be reviewed in full before placing any order.

00 6791 001 001 005

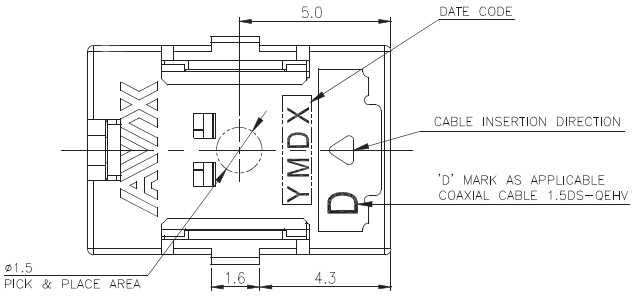

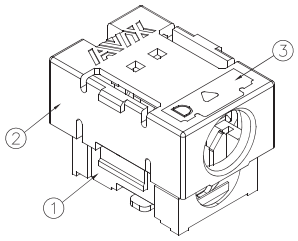

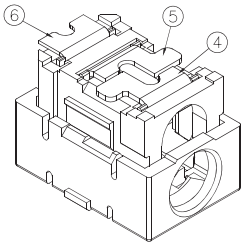

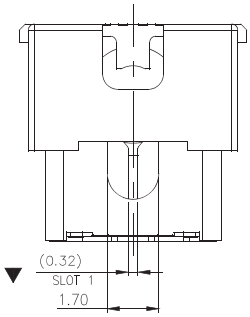

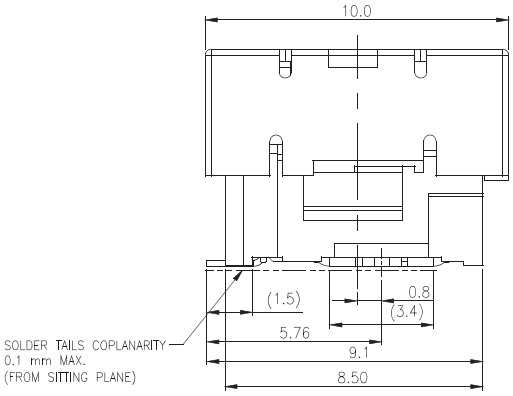

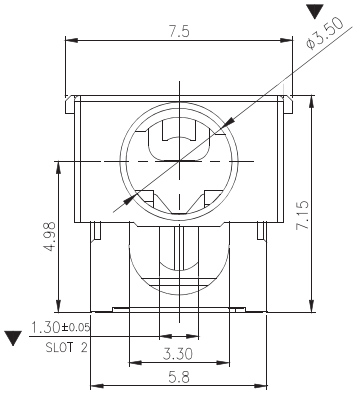

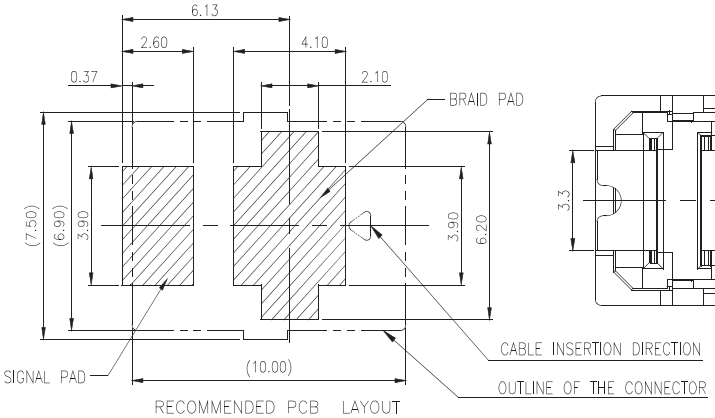

RECOMMENDED PCB LAYOUT
NOTE: TOLERANCE FOR PCB LAYOUT IS ±0.05mm

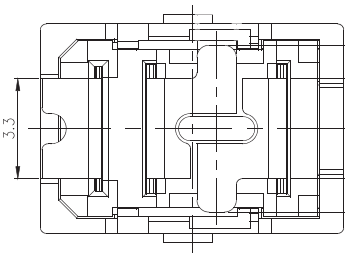

NOTES:
1. VOLTAGE RATING: 125v
2. OPERATING TEMPERATURE: −40°C TO +105°C.
3. FOR REFLOW SOLDERING LEAD-FREE PROCESS.
4. SOLDERING HEAT RESISTANCE REFLOW SOLDERING 260°C.
5. RECOMMENDED PRESSING STOP HEIGHT AS 4.5±0.05mm.
6. ALLOW CABLE INSERT TOLERANCE: 0.3mm MAX.
7. CRITICAL DIMENSION: ▼
8. GENERAL TOLERANCE ±0.20mm.

ITEM	DESCRIPTION	MATERIAL	FINISH	Q'TY	NOTE
⑥	SIGNAL CONTACT	COPPER ALLOY	Tin OVERALL, NICKEL UNDERPLATED	1	
⑤	BRAID CONTACT(2)	COPPER ALLOY	Tin OVERALL, NICKEL UNDERPLATED	1	
④	BRAID CONTACT(1)	COPPER ALLOY	Tin OVERALL, NICKEL UNDERPLATED	1	
③	SUPPORT PLATE	STAINLESS STEEL		1	
②	CAP	PA-46	UL94HB,BLACK	1	
①	HOUSING	PA-46	UL94HB,BLACK	1	

The Important Information/Disclaimer is incorporated in the catalog where these specifications came from or available online at www.avx.com/disclaimer/ by reference and should be reviewed in full before placing any order.

00 6791 001 001 005

CONSTRUCTION

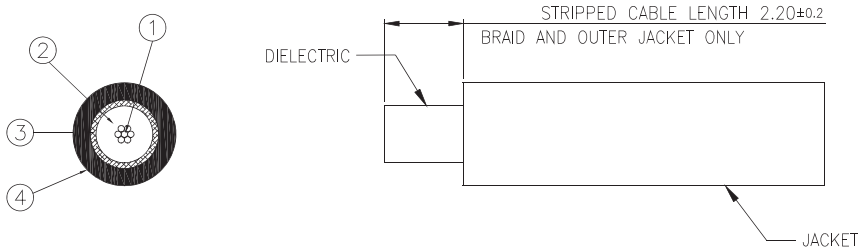

NOTE: JACKET STRIP OD DEFORMED MUST BE THAN LESS ø3.30mm AFTER CUT OFF.

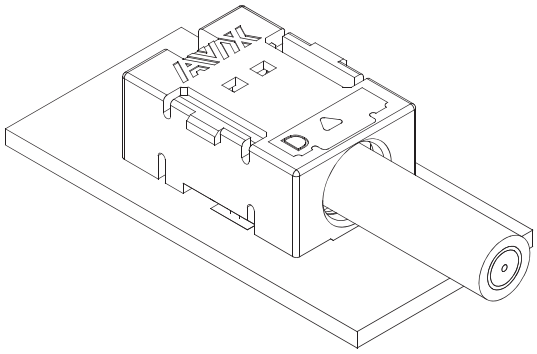

APPLICABLE COAXIAL CABLE DIMENSIONS:

COMPONENT	DIAMETER (mm)	
	LOWER LIMIT	UPPER LIMIT
(1) CONDUCTOR	ø0.46	ø0.57
(2) DIELECTRIC	ø1.45	ø1.70
(3) BRAID SHIELD	ø1.85	ø2.10
(4) JACKET	ø2.70	ø3.10

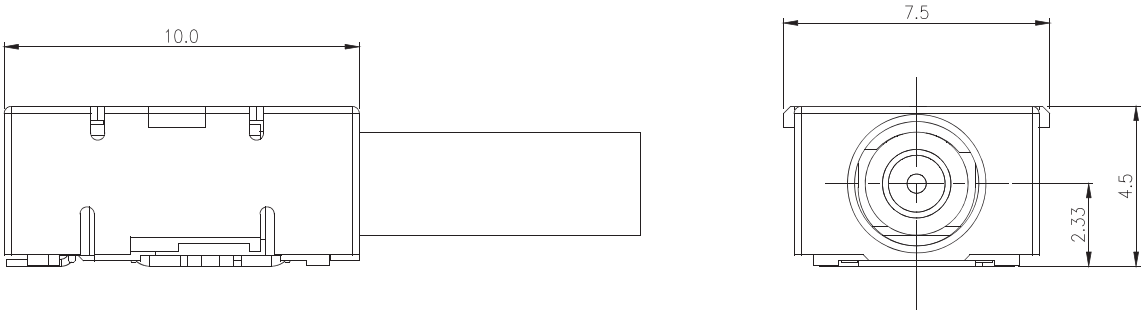

WIRED CONNECTOR

The Important Information/Disclaimer is incorporated in the catalog where these specifications came from or available online at www.avx.com/disclaimer/ by reference and should be reviewed in full before placing any order.

00 6791 001 001 005

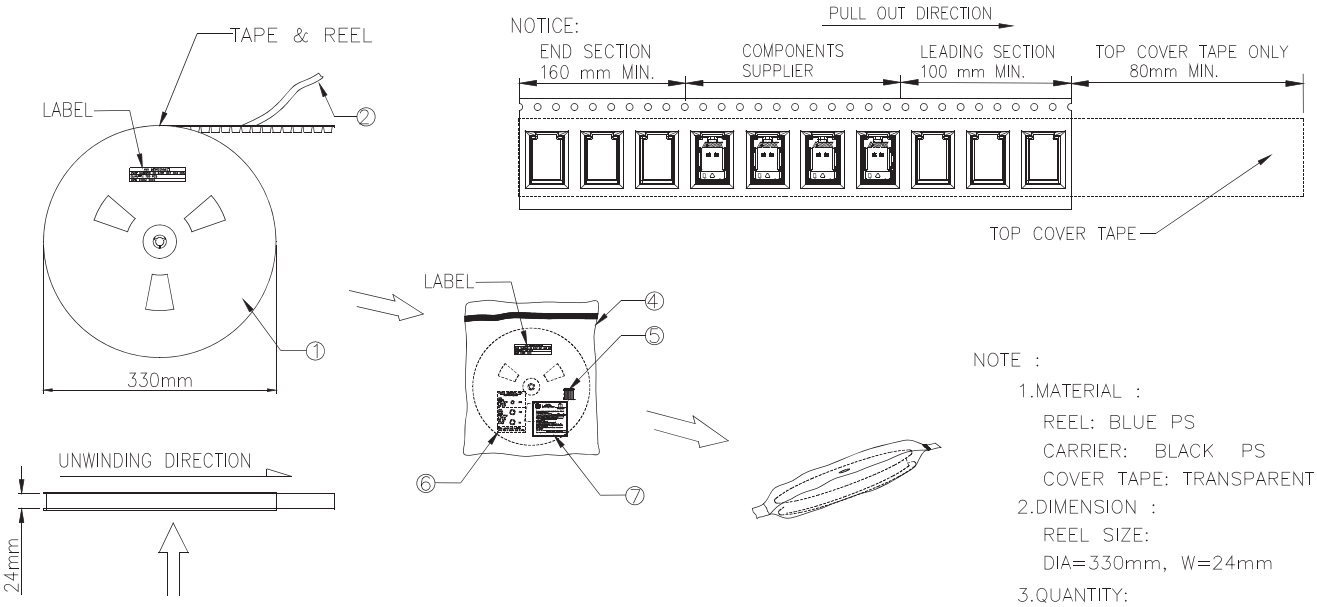

NOTE :

1.MATERIAL :

REEL: BLUE PS

CARRIER: BLACK PS

COVER TAPE: TRANSPARENT PE

2.DIMENSION :

REEL SIZE:

DIA=330mm, W=24mm

3.QUANTITY:

700PCS/REEL

4.HUMIDITY REQUIREMENTS FOLLOW MSL LEVEL 3

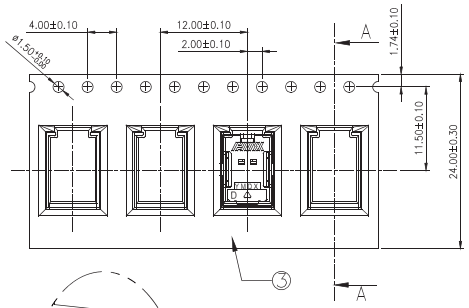

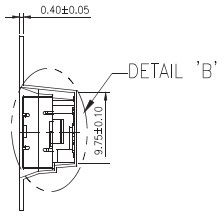

SECTION:A–A

A	165°~180°
F	35–125g

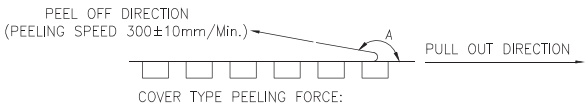

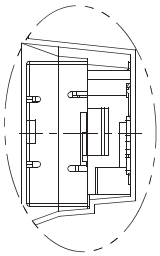

DETAIL'B';SCALE=5:1

REEL LABEL

AVX INTERCONNECT
PART NUMBER: 00 6791 001 003 005
QUANTITY: 700 PCS
DATE CODE: XXXX

ITEM	DESCRIPTIONs	MATERIAL	FINISH	Q'TY	NOTE	COLOR
⑦	CAUTION LABEL	——	——	1	——	——
⑥	HUMIDITY INDICATOR CARD	——	——	1	——	——
⑤	DESICCANT	——	20g/Bag	1	——	——
④	ESD BAG	FOIL	VACUUM SEAL	1	——	——
③	ESD CARRIER TAPE	PS	——	1	——	——
②	ESD COVER TAPE	PE	——	1	——	——
①	REEL ASS'Y	PS	——	1	——	BLUE

The Important Information/Disclaimer is incorporated in the catalog where these specifications came from or available online at www.avx.com/disclaimer/ by reference and should be reviewed in full before placing any order.

FOLLOW US:

VISIT US AT WWW.KYOCERA-AVX.COM

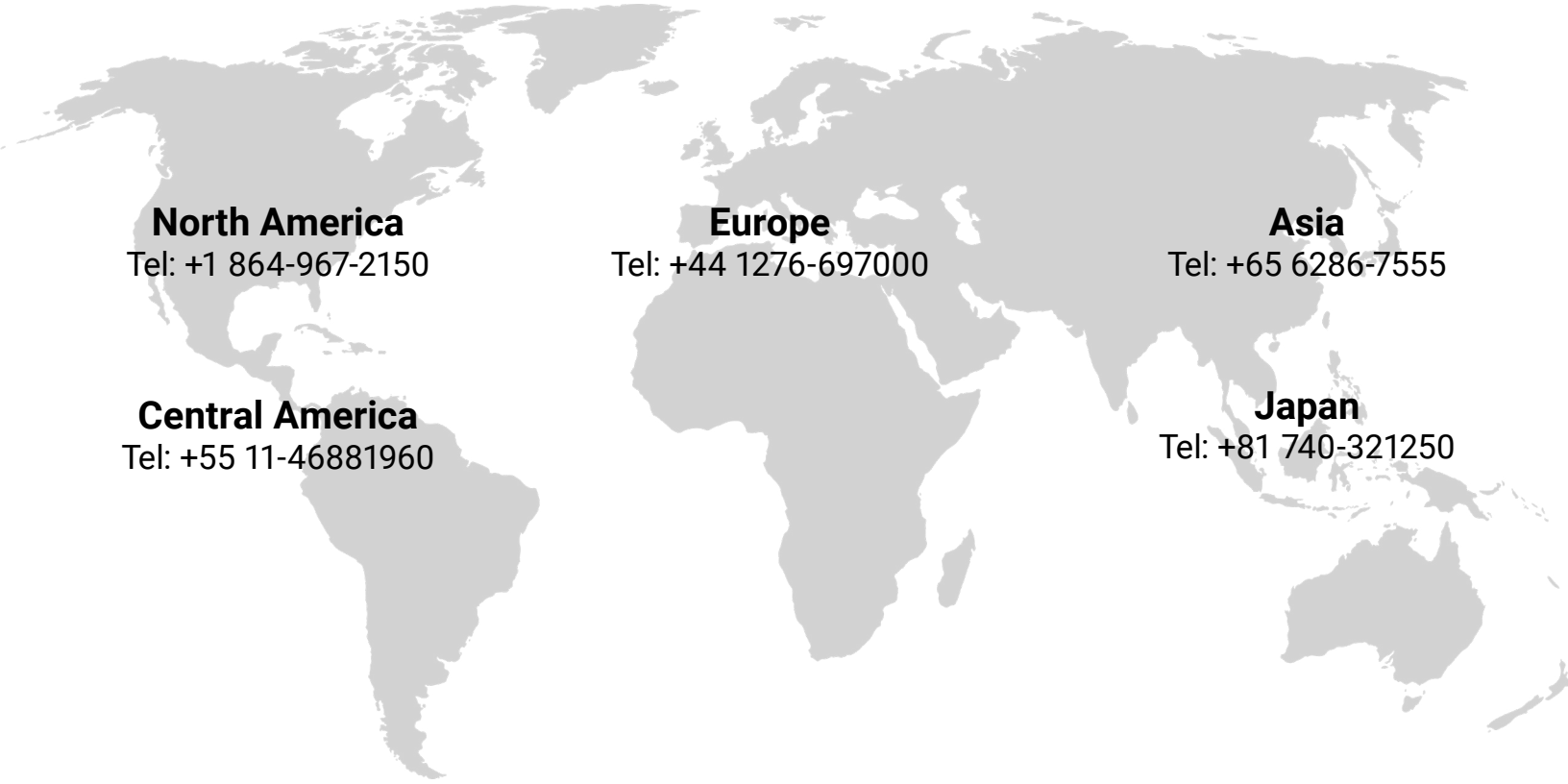

North America
Tel: +1 864-967-2150

Europe
Tel: +44 1276-697000

Asia
Tel: +65 6286-7555

Central America
Tel: +55 11-46881960

Japan
Tel: +81 740-321250