Table of Contents

Page	Sheet Name
01	Title, ToC and Rev History
02	Notes
03	BCC
04	MCU
05	SBC
06	AUTHENTICATION
07	NFC
08	SWITCH
09	OVERCURRENT

Rev	Date	Revision History
X1	11 JAN 2019	Initial revision
A	01 APR 2019	Agile release
B	23 JAN 2020	- added inductor in parallel with the antenna - added protection on J19 and J21 - changed MCU to S32K144 - BOM optimisation
B1	22 MAY 2020	- JPI CHANGED TO DNP - J20 CHANGED TO POP - J6 CHANGED TO CLOSED - ADDED ALTERNATE PART NUMBER FOR J4&J5

RDDRONE-BMS772

6501 William Cannon Drive West
Austin, TX 78735-8598

This document contains information proprietary to NXP and shall not be used for engineering design, procurement or manufacture in whole or in part without the express written permission of NXP Semiconductors.

ICAP Classification: CP: IUO: X PUBI:

Designer: Ovidiu Leonte	Drawing Title: RDDRONE-BMS772		
Drawn by: Ovidiu Leonte	Page Title: Title, ToC and Rev History		
Approved: Philippe Perruchoud	Size B	Document Number SCH45742 - SPF45742	Rev B1
	Date: Friday, May 22, 2020	Sheet 1 of 9	

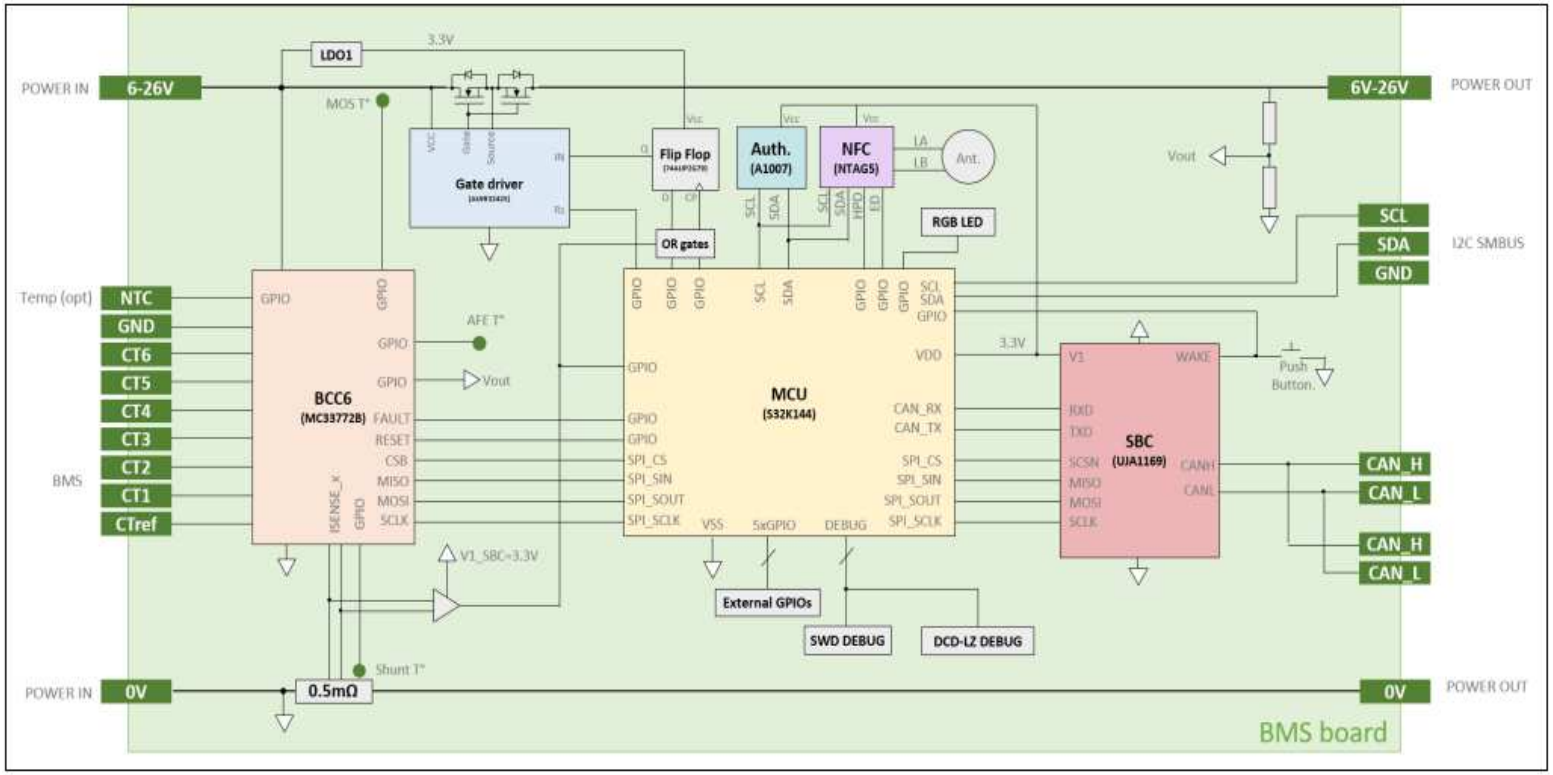

DO NOT POPULATE

REF DES	ASSY_OPT	PAGE NAME
C34,C49,C12,C99,C106,C54,C6, C105,C103,C29,C26,C107,C22, C104,C18,C101,C100,JP1,C102	DNP	03 - BCC
J21	DNP	04 - MCU
R49,C66,R50,J22	DNP	05 - SBC
L2	DNP	07 - NFC
HS2,Q3,Q7,R99,Q8,Q4,J5,HS3, HS4,J4,HS1	DNP	08 - SWITCH

DEFAULT JUMPER

REF DES	JUMPER	PAGE NAME
SJ8,SJ1,SJ2,SJ6,SJ7,SJ10,SJ4, SJ12,SJ3,SJ11,SJ9,SJ5	OPEN	03 - BCC
J6	CLOSED	05 - SBC
SJ15,SJ16	OPEN	07 - NFC
SJ13,SJ14	CLOSED	08 - SWITCH

6501 William Cannon Drive West
Austin, TX 78735-8598

This document contains information proprietary to NXP and shall not be used for engineering design, procurement or manufacture in whole or in part without the express written permission of NXP Semiconductors.

ICAP Classification: CP: IUO: X PUBI:

Designer: Ovidiu Leonte
Drawn by: Ovidiu Leonte
Approved: Philippe Perruchoud

Drawing Title: **RDDRONE-BMS772**

Page Title: **Notes**

Size: B
Document Number: SCH45742 - SPF45742
Rev: B1

Date: Friday, May 22, 2020
Sheet 2 of 9

BCC

BCC Power Supply

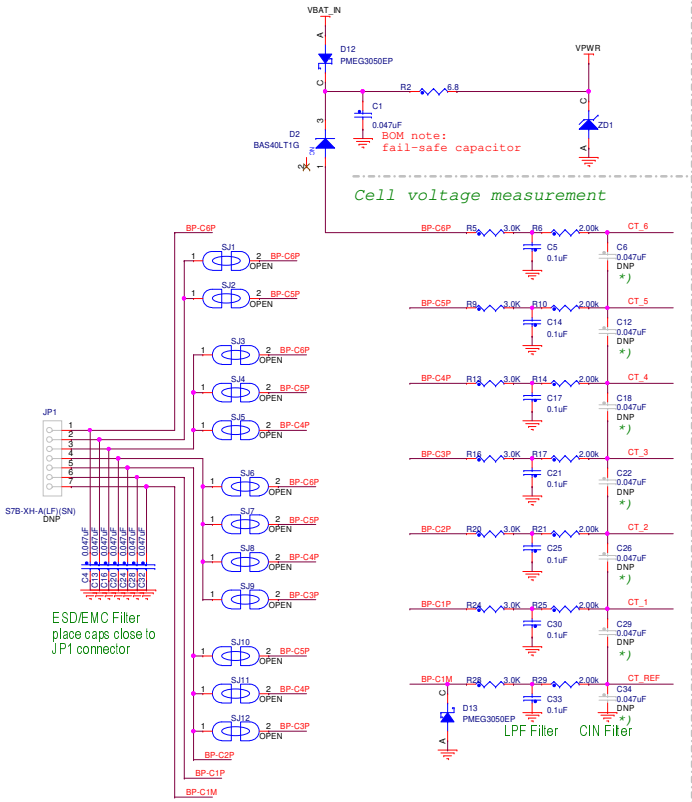

Filtering Current Sensor

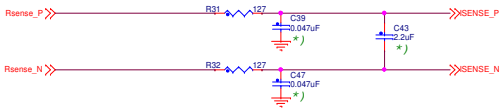

Balancing Circuit

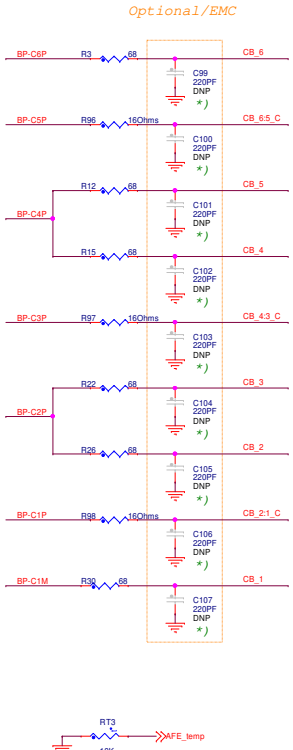

*) Place close to U1 PIN

Battery Cell Controller

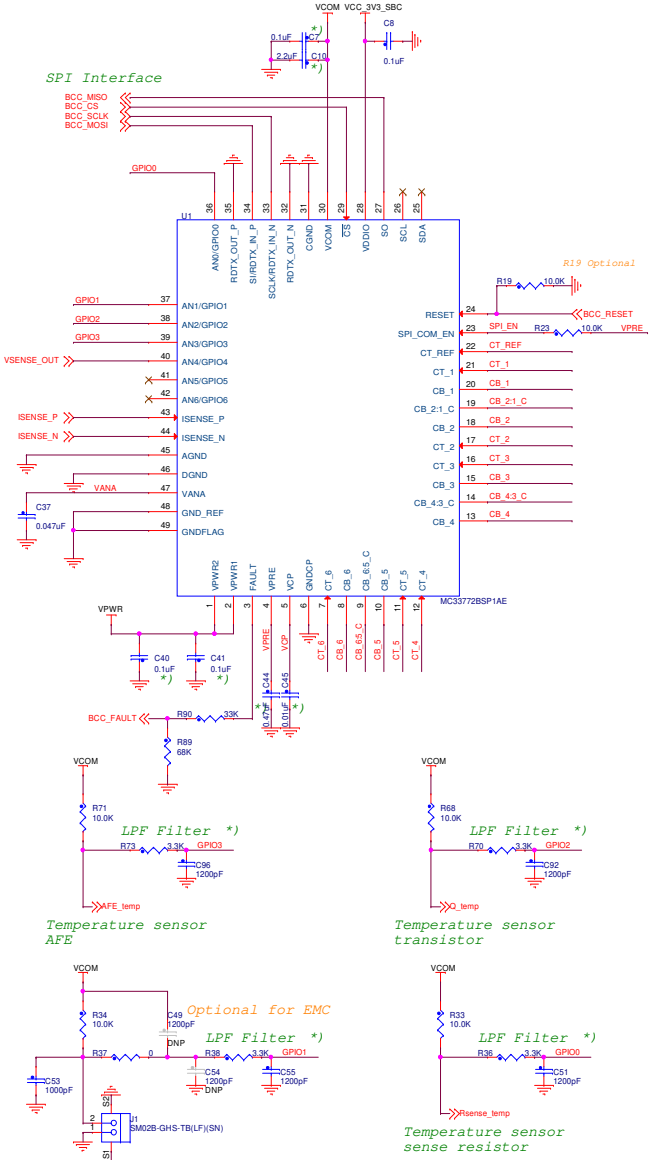

Depending on the number of cells of the battery, jumpers need to be set.
By default, no jumpers are set.
Refer to the table below to set the jumpers to the desired configuration.

# Cells	Jumpers position											
	SJ1	SJ2	SJ3	SJ4	SJ5	SJ6	SJ7	SJ8	SJ9	SJ10	SJ11	SJ12
3s						●				●	●	●
4s			●				●				●	●
5s	●			●				●				●
6s		●			●				●			

NXP
6501 William Cannon Drive West
Austin, TX 78735-8598

This document contains information proprietary to NXP and shall not be used for engineering design, procurement or manufacture in whole or in part without the express written permission of NXP Semiconductors.

ICAP Classification: CP: IUO: X PUBL

Designer: Ovidiu Leonte	Drawing Title: RDDRONE-BMS772		
Drawn by: Ovidiu Leonte	Page Title: BCC		
Approved: Philippe Perruchoud	Size C	Document Number SCH45742 - SPF45742	Rev B1
	Date: Wednesday, June 03, 2020	Sheet 3 of 9	

MCU

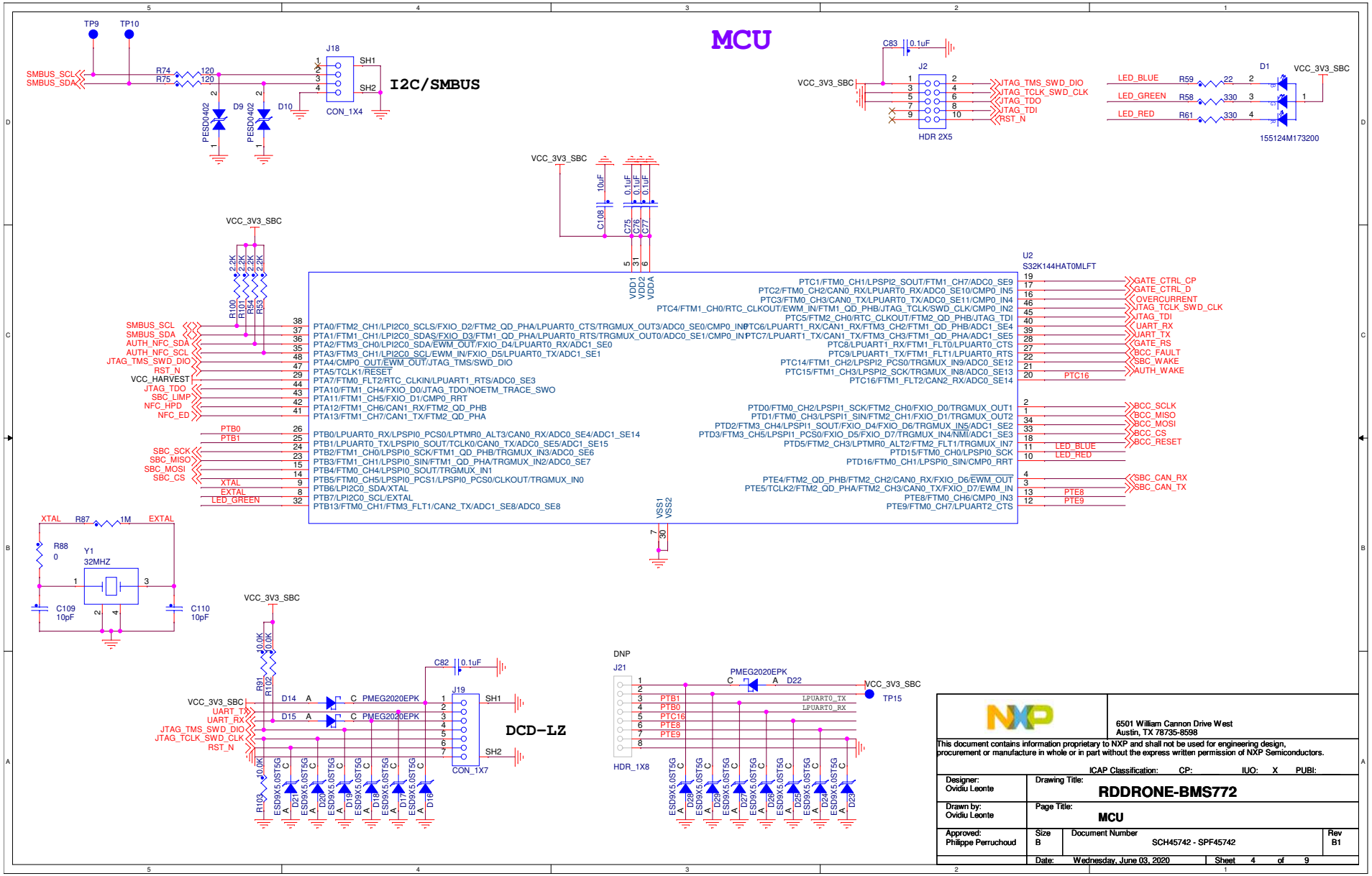

6501 William Cannon Drive West
Austin, TX 78735-8598

This document contains information proprietary to NXP and shall not be used for engineering design, procurement or manufacture in whole or in part without the express written permission of NXP Semiconductors.

ICAP Classification: CP: IUO: X PUBI:

Designer: Ovidiu Leonte	Drawing Title: **RDDRONE-BMS772**		
Drawn by: Ovidiu Leonte	Page Title: **MCU**		
Approved: Philippe Perruchoud	Size B	Document Number SCH45742 - SPF45742	Rev B1
	Date: Wednesday, June 03, 2020	Sheet 4 of 9	

SBC

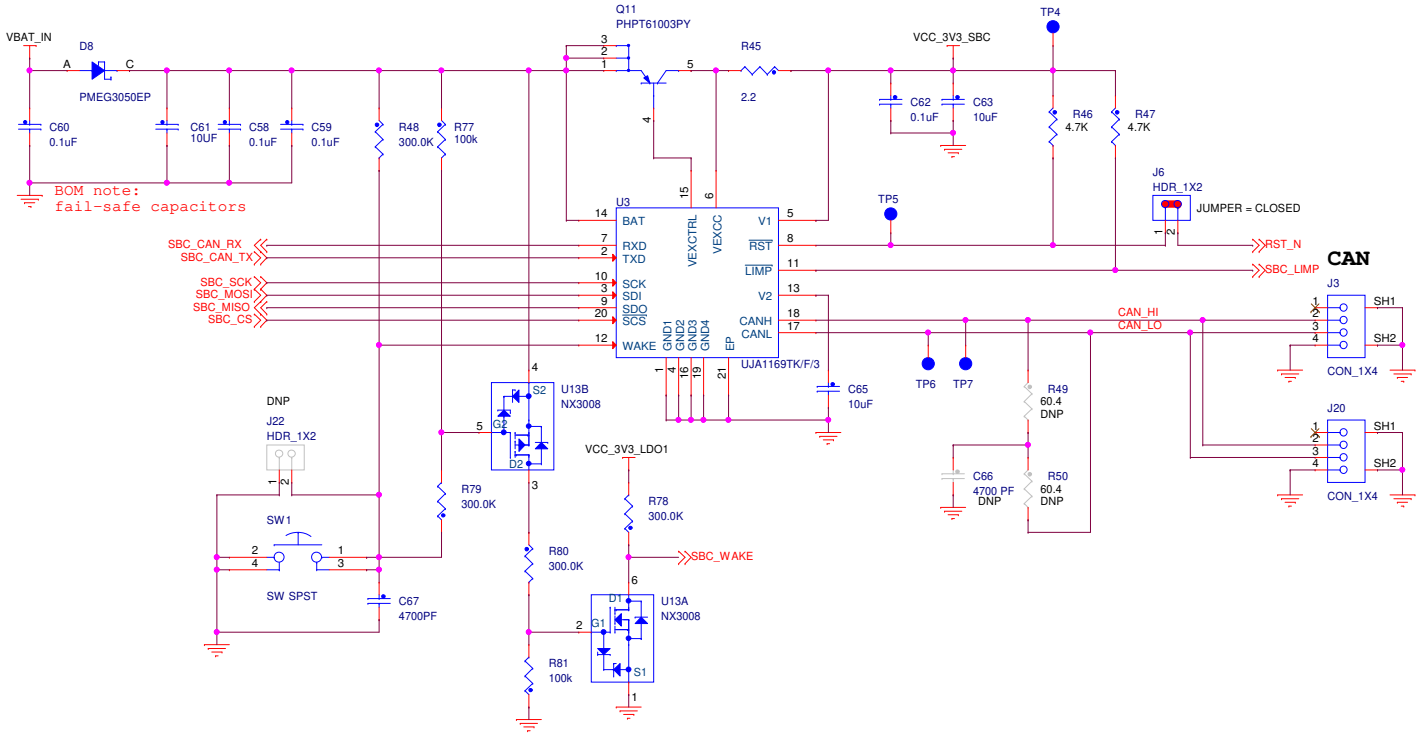

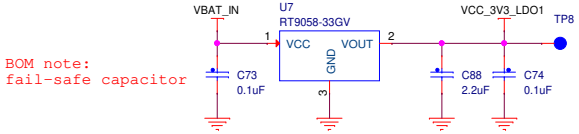

6501 William Cannon Drive West
Austin, TX 78735-8598

This document contains information proprietary to NXP and shall not be used for engineering design, procurement or manufacture in whole or in part without the express written permission of NXP Semiconductors.

ICAP Classification: CP: IUO: X PUBI:

Designer: Ovidiu Leonte	Drawing Title: **RDDRONE-BMS772**		
Drawn by: Ovidiu Leonte	Page Title: **SBC**		
Approved: Philippe Perruchoud	Size B	Document Number SCH45742 - SPF45742	Rev B1
	Date: Wednesday, June 03, 2020	Sheet 5 of 9	

AUTHENTICATION

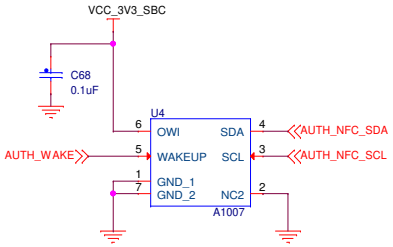

6501 William Cannon Drive West
Austin, TX 78735-8598

This document contains information proprietary to NXP and shall not be used for engineering design, procurement or manufacture in whole or in part without the express written permission of NXP Semiconductors.

ICAP Classification: CP: IUO: X PUBI:

Designer: Ovidiu Leonte	Drawing Title: **RDDRONE-BMS772**	
Drawn by: Ovidiu Leonte	Page Title: **AUTHENTICATION**	
Approved: Philippe Perruchoud	Size B / Document Number SCH45742 - SPF45742	Rev B1
	Date: Wednesday, June 03, 2020	Sheet 6 of 9

NFC

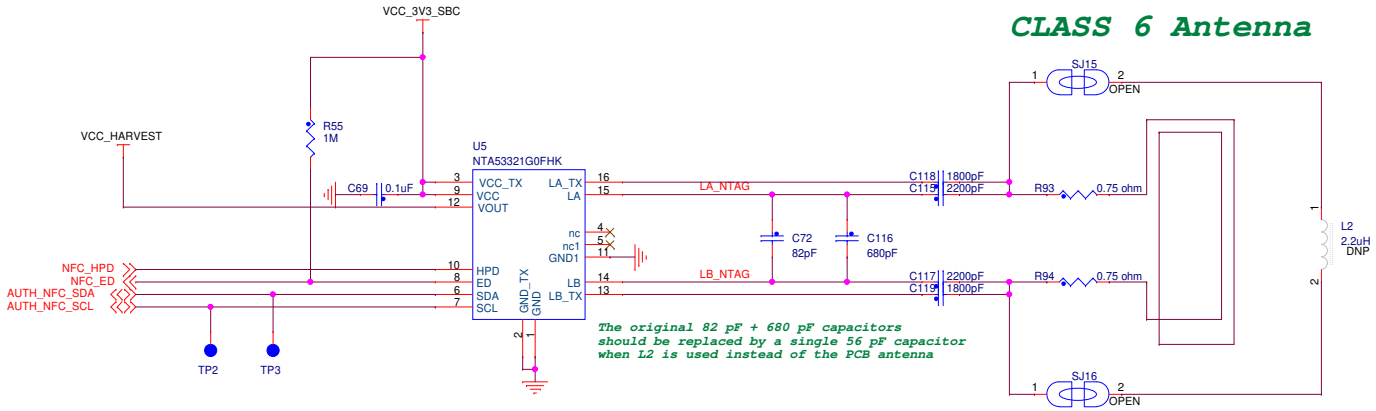

The original 82 pF + 680 pF capacitors should be replaced by a single 56 pF capacitor when L2 is used instead of the PCB antenna

CLASS 6 Antenna

By removing the 0.75 ohm resistors and connecting the solder jumpers, users can use L2 instead of PCB antenna.

L2 can be used for extended range operation

6501 William Cannon Drive West
Austin, TX 78735-8598

This document contains information proprietary to NXP and shall not be used for engineering design, procurement or manufacture in whole or in part without the express written permission of NXP Semiconductors.

ICAP Classification: CP: IUO: X PUBI:

Designer: Ovidiu Leonte	Drawing Title: **RDDRONE-BMS772**	
Drawn by: Ovidiu Leonte	Page Title: **NFC**	
Approved: Philippe Perruchoud	Size B / Document Number SCH45742 - SPF45742	Rev B1
	Date: Wednesday, June 03, 2020	Sheet 7 of 9

SWITCH

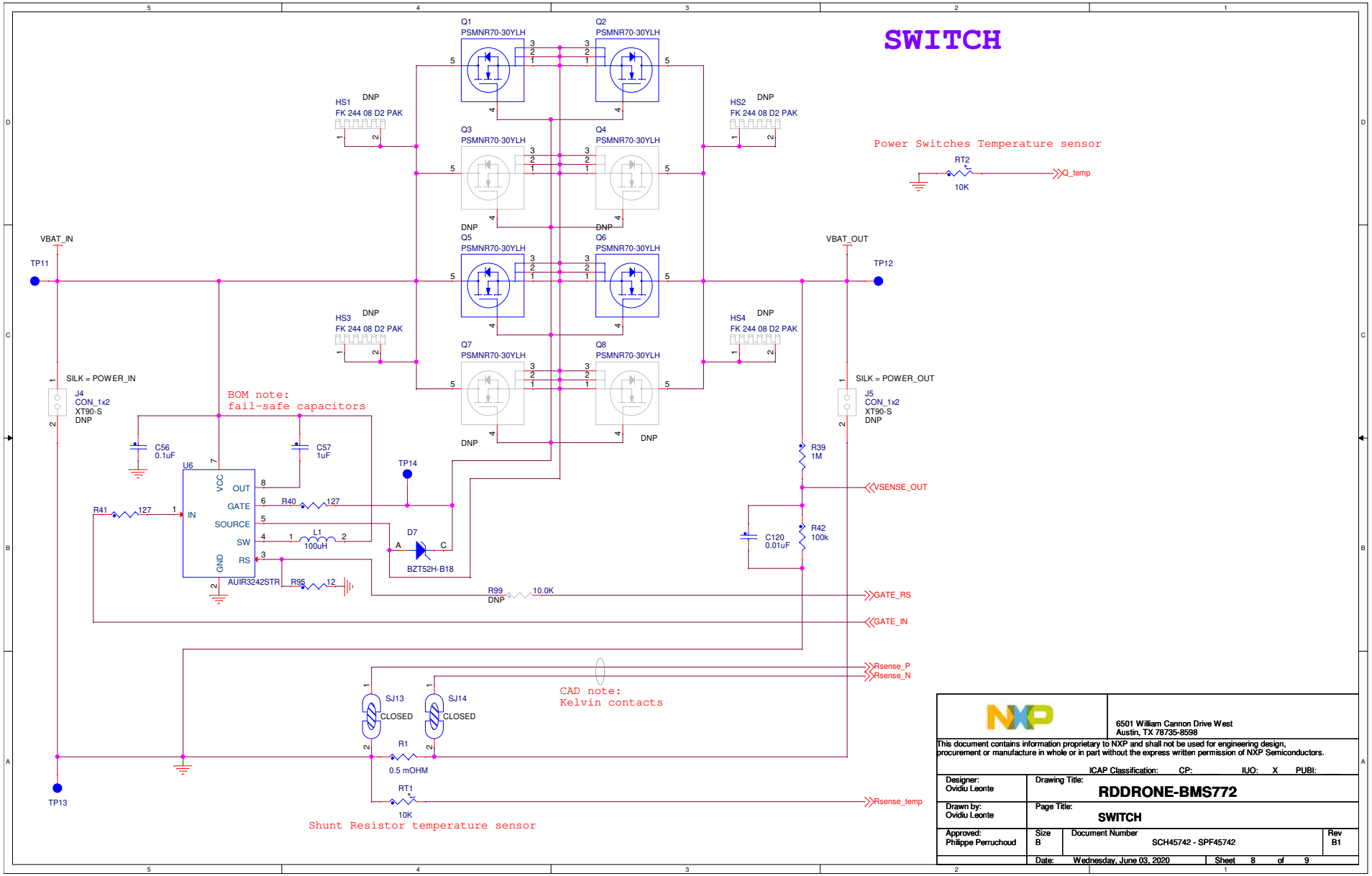

6501 William Cannon Drive West
Austin, TX 78735-8598

This document contains information proprietary to NXP and shall not be used for engineering design, procurement or manufacture in whole or in part without the express written permission of NXP Semiconductors.

ICAP Classification: CP: IUO: X PUBI:

Designer: Ovidiu Leonte	Drawing Title: **RDDRONE-BMS772**	
Drawn by: Ovidiu Leonte	Page Title: **SWITCH**	
Approved: Philippe Perruchoud	Size B / Document Number SCH45742 - SPF45742	Rev B1
	Date: Wednesday, June 03, 2020	Sheet 8 of 9

OVERCURRENT

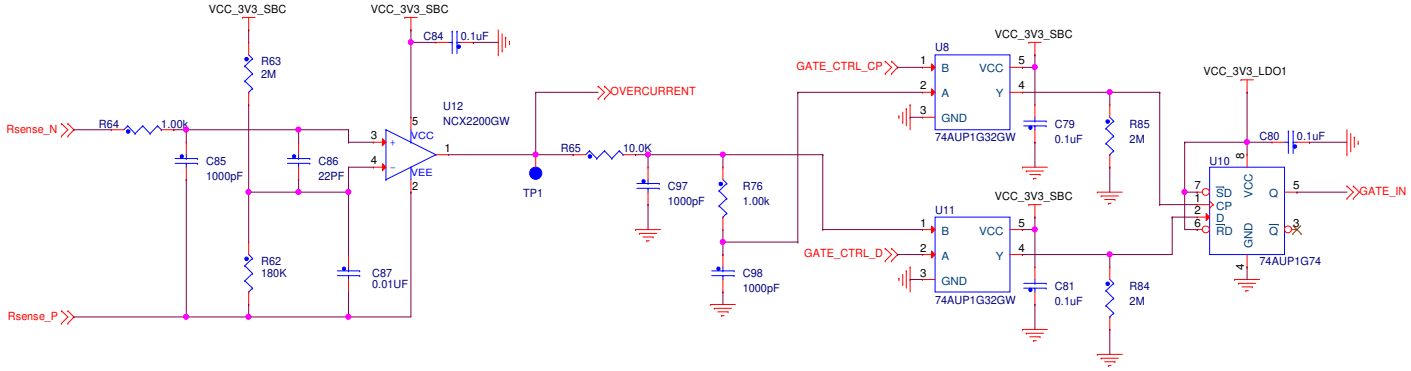

6501 William Cannon Drive West
Austin, TX 78735-8598

This document contains information proprietary to NXP and shall not be used for engineering design, procurement or manufacture in whole or in part without the express written permission of NXP Semiconductors.

ICAP Classification: CP: IUO: X PUBI:

Designer: Ovidiu Leonte	Drawing Title: **RDDRONE-BMS772**		
Drawn by: Ovidiu Leonte	Page Title: **OVERCURRENT**		
Approved: Philippe Perruchoud	Size B	Document Number SCH45742 - SPF45742	Rev B1
	Date: Wednesday, June 03, 2020	Sheet 9 of 9	