ebm-papst Inc.
100 Hyde Road
USA-Farmington, CT 06034
Phone +1 (860) 674-1515
Fax +1 (860) 674-8536
sales@us.ebmpapst.com
www.ebmpapst.us

CONTENTS

1. SAFETY REGULATIONS AND NOTES 2
1.1 Levels of hazard warnings 2
1.2 Staff qualification 2
1.3 Basic safety rules 2
1.4 Electrical voltage 2
1.5 Safety and protective functions 2
1.6 Electromagnetic radiation 2
1.7 Mechanical movement 2
1.8 Emission 3
1.9 Hot surface 3
1.10 Transport 3
1.11 Storage 3

2. INTENDED USE 3

3. TECHNICAL DATA 4
3.1 Product drawing 4
3.2 Product dimensions 4
3.3 Modular EC Plenum Fan Design Variations 5
3.4 Nominal Data 5
3.5 Technical features 5
3.6 Mounting data 6
3.7 Transport and storage conditions 6
3.8 Electromagnetic compatibility 6

4. INSTALLATION 6
4.1 Connecting the mechanical system 6
4.1.2 Mounting conditions of fan 7
4.1.3 Installation orientation 7
4.2 Installation space 7
4.3 Installation position and attachment of Modular EC Plenum Fans 7
4.3.1 Attachment of fan to pressure wall 7
4.3.2 Sealing with edge protection profile 7
4.3.3 Sealing with elastic sealing material 8
4.4 Installation position and attachment of Modular Plug fans with isolation design 8
4.4.1 Attachment of fan to pressure wall 8
4.4.2 Sealing with elastic connecting elements 8
4.4.3 Sealing with sealing material 8

5 CONNECTION AND START-UP 8
5.1 Connecting the electrical system 8
5.1.1 Prerequisites 9
5.1.2 Power supply connection, fuse protection 9
5.1.3 Reactive currents 9
5.1.4 Residual current circuit breaker (RCCB) 9
5.1.5 Leakage current 9
5.1.6 Locked-rotor protection 9
5.2 Connection in terminal box 9
5.2.1 Preparing cables for connection 9
5.2.2 Cable routing 10
5.3 EG1RVVVXXXC connection information 10
5.3.1 Connect cables to terminal 10
5.3.2 Connection screen 11
5.4 EG1RVVVXXXA Connection information 13
5.4.1 Connect cables to terminals 13
5.4.2 Connection screen 14
5.4.3 Configuration options 15
5.4.4 Equivalent circuit diagrams 16
5. Recommendations for electrical hookup of a Modular EC Plenum Fan 17
5.6 Factory settings 17
5.7 Checking the connections 17
5.8 Switching on device 17
5.9 Switching off the device 17

6. INTEGRATED PROTECTIVE FUNCTIONS 17

7. VIBRATION INFORMATION 17
7.1. General characteristic of vibration 17
7.1.1 Vibration limits 17
7.1.2 Basic Principles 17
7.2 Characteristics of vibration of a Modular EC Plenum Fan installed in system 18
7.3 In situ vibration measurement 18
7.3.2. Vibration measurement 18
7.5 Action to be taken in the event of excessive vibrational loading 19

8. MAINTENANCE, MALFUNCTIONS, POSSIBLE CAUSES AND REMEDIES 19
8.1 EG1RVVVXXXA Warning/status codes 19
8.1.1 Warning codes 20
8.1.2 Status codes 20
8.2 Cleaning 20
8.3 Safety inspection 20
8.4 Disposal 20
8.4.1 Country-specific legal requirements 21
8.4.2 Disassembly 21
8.4.3 Component disposal 21

1. SAFETY REGULATIONS AND NOTES

Please contact ebm-papst for an electronic copy of these operating instructions.

Please read these operating instructions carefully before starting work with the device. Observe the following warnings to prevent malfunctions or physical damage to both property and people.

These operating instructions may be duplicated and forwarded for information about potential dangers and their prevention.

READ AND SAVE THESE INSTRUCTIONS

WARNING – TO REDUCE THE RISK OF FIRE, ELECTRIC SHOCK, OR INJURY TO PERSONS, OBSERVE THE FOLLOWING:

a) Use this unit only in the manner intended by the manufacturer, if you have questions, contact the manufacturer.
b) Before servicing or cleaning unit, switch power off at service panel and lock the service disconnecting means to prevent power from being switched on accidentally. If the service disconnect cannot be locked, securely fasten a prominent warning device, such as a tag, to the service panel.

CAUTION
For General Ventilation Use Only, Do Not Use To Exhaust Hazardous Or Explosive Materials And Vapors.

1.1 Levels of hazard warnings

These operating instructions use the following hazard levels to indicate potentially hazardous situations and important safety regulations:

DANGER
Indicates an imminently hazardous situation which, if not avoided, will result in death or serious injury. Compliance with the measures is mandatory.

WARNING
Indicates a potentially hazardous situation which, if not avoided, could result in death or serious injury. Exercise extreme caution while working.

CAUTION
Indicates a potentially hazardous situation which, if not avoided, may result in minor or moderate injury or damage of property.

NOTE
A potentially harmful situation can occur and, if not avoided, can lead to property damage.

1.2 Staff qualification

The device may only be transported, unpacked, installed, operated, maintained and otherwise used by suitably qualified, trained and authorized technical staff.

Only authorized specialists are permitted to install the device, to carry out a test run and to perform work on the electrical installation.

1.3 Basic safety rules

The safety hazards associated with the device must be assessed again following installation in the final product. The locally applicable industrial safety regulations are always to be observed when working on the device. Keep the workplace clean and tidy. Untidiness in the work area increases the risk of accidents.

Note the following when working on the device:
⇨ Do not make any modifications, additions or conversions to the device without the approval of ebm-papst.

1.4 Electrical voltage

⇨ Check the device's electrical equipment at regular intervals; refer to **chapter 8.3 Safety inspection**.
⇨ Replace loose connections and defective cables immediately.

DANGER
Electrically charged device
Risk of electric shock
➔ When working on an electrically charged device, stand on a rubber mat.

WARNING
Live terminals and connections have voltage even with a unit that is shut off
Electric shock
➔ Wait five minutes after disconnecting the voltage at all poles before opening the device.

CAUTION
In the event of fault, there is electric voltage at the rotor and impeller
The rotor and impeller have basic insulation.
➔ Do not touch the rotor and impeller once they are installed.

CAUTION
If control voltage is applied or a speed set point is stored, the motor automatically restarts, e.g. after a power failure.
Risk of injury
➔ Keep out of the danger zone of the device.
➔ When working on the device, switch off the mains supply voltage and ensure that it cannot be switched back on.
➔ Wait until the device stops.
➔ After working on the device, remove any used tools or other objects from the device.

1.5 Safety and protective functions

DANGER
Protective device missing and protective device not functioning
Without a protective device there is a risk of serious injury, for instance if the hands reach or are sucked into the device during operation.
➔ Operate the device only with a fixed protective device and guard grill.
➔ The fixed protective device must be able to withstand the kinetic energy of a fan blade that becomes detached at maximum speed.
➔ There must not be any gaps which it is possible to reach into with the fingers.
➔ The device is a built-in component. As the operator, you are responsible for ensuring that the device is secured adequately.
➔ Stop the device immediately if you notice a missing or ineffective protective device.

1.6 Electromagnetic radiation

Interference from electromagnetic radiation is possible, e.g. in conjunction with open and closed-loop control devices.
If impermissible radiation levels occur following installation, appropriate shielding measures have to be taken by the user.

NOTE
Electrical or electromagnetic interferences after installing the device in customer equipment.
➔ Verify that the entire setup is EMC compliant.

1.7 Mechanical movement

DANGER
Rotating device
Risk of injury to body parts coming into contact with the rotor or the impeller.
➔ Secure the device against accidental contact.
➔ Before working on the system/machine, wait until all parts have come to a standstill.

DANGER
Flying/Ejected parts
Missing safety devices may cause balancing weights or broken fan blades to be ejected and cause bodily harm.
➔ Take appropriate safety measures.

ebm-papst Inc. · 100 Hyde Road Farmington CT 06034 · 860-674-1515 · sales@us.ebmpapst.com · www.ebmpapst.us

WARNING
Rotating device
Long hair, loose items of clothing and jewelry could become entangled and pulled into the device. You could be injured.
- ➔ Do not wear any loose clothing or jewelry while working on rotating parts.
- ➔ Protect long hair by wearing a cap.

1.8 Emission

WARNING
Depending on the installation and operating conditions, a sound pressure level may exceed 70 dB(A).
Danger of noise-induced hearing loss
- ➔ Take appropriate technical safety measures.
- ➔ Protect operating personnel with appropriate safety equipment, e.g. hearing protection.
- ➔ Also observe the requirements of local agencies.

1.9 Hot surface

CAUTION
High temperature at the electronics enclosure
Danger of burn injuries
- Ensure that sufficient protection against accidental contact is provided.

1.10 Transport

WARNING
Transport of fan
Injuries from slipping or falling.
- ➔ The fan is always to be transported with care and in its original packaging.
- ➔ If set down too hard or at an angle for example, the impact can lead to bearing damage or deformation of the frame or impeller.
- ➔ It must be ensured that the fans cannot tip over during transportation and handling.
- ➔ Secure the fan(s) with appropriate equipment such as a lashing strip so that nothing can slip or tip, especially when stacking multiple fans.
- ➔ Use the provided lifting point on top of each cube, see **chapter 4.1 Connecting the mechanical system**.
- ➔ Also make allowance for possible wind forces.

1.11 Storage
- ⇨ Store the device, fully assembled, in a dry and weatherproof manner in the original packing in a clean environment.
- ⇨ Protect the device from environmental impacts and dirt until the final installation.
- ⇨ We recommend storing the device for a maximum up to one year to guarantee proper operation and longest possible service life.
- ⇨ Even devices explicitly suited for outdoor use are to be stored as described prior to being commissioned.
- ⇨ Maintain the storage temperature; see **Chapter 3.7 Transport and storage conditions.**
- ⇨ Please make sure that all screwed cable glands are fitted with dummy plugs.

2. INTENDED USE
The device is exclusively designed as a built-in device for conveying air according to its technical data.

Any other usage above and beyond this does not conform with the intended purpose and constitutes misuse of the device.

Customer equipment must be capable of withstanding the mechanical and thermal stresses that can arise from this product. This applies for the entire service life of the equipment in which this product is installed.

Intended use also includes:
- The device is only to be used in power systems with grounded neutral (TN/TT power systems), in power systems with phase conductor grounding, or in IT power systems.
- The device is to be used in networks with network quality characteristics as per EN 50160.
- Using the device only in stationary systems.
- Performing all maintenance work.
- Conveying air at an ambient air pressure between 800 mbar and 1050 mbar.
- Using the device within the permitted ambient temperature range; see **Chapter 3.7 Transport and storage conditions** and **Chapter 3.4 Nominal data**.
- Operating the device with all protective devices.
- Following these instructions.

Improper use
In particular, operating the device in the following ways is prohibited and could be hazardous:
- Operating the device in an unbalanced state, e.g. due to dirt deposits or ice formation.
- Resonant operation, operation with severe vibration. This also includes vibration transmitted to the fan from the customer installation.
- Operation in medical equipment with a life-sustaining or life-support function.
- Conveying solids in the flow medium.
- Painting the device.
- Connections (e.g. screws) coming loose during operation.
- Opening the terminal box during operation.
- Conveying air that contains abrasive particles.
- Conveying highly corrosive air, e.g. salt spray. Exception: devices designed for salt spray and correspondingly protected.
- Conveying air with high dust content, e.g. suctioning off sawdust.
- Operating the device close to flammable materials or components.
- Operating the device in an explosive atmosphere.
- Using the device as a safety component or to perform safety-related functions.
- Operation with completely or partially disassembled or manipulated protective devices.
- In addition, all applications not listed among the intended uses.

ebm-papst Inc. · 100 Hyde Road Farmington CT 06034 · 860-674-1515 · sales@us.ebmpapst.com · www.ebmpapst.us

3. TECHNICAL DATA
3.1 Product drawing

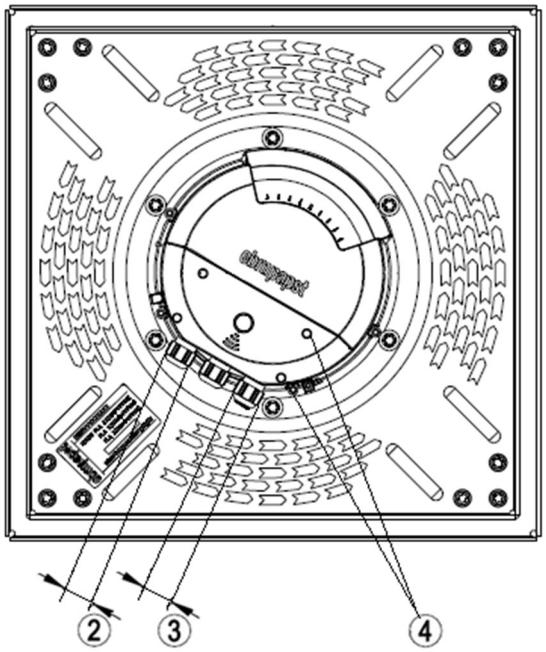

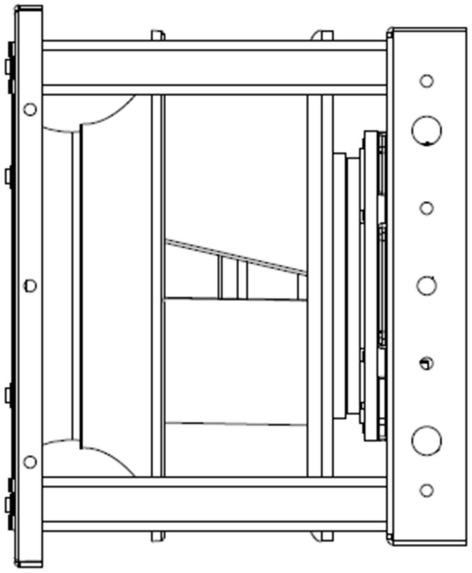

1	Installed position: shaft horizontal; cable glands located to the bottom left side of the unit (as shown) or bottom right side.	
	EG1RVVVXXXC	**EG1RVVVXXXA**
2	Cable diameter min. 4mm, max 10mm, tightening torque 4± 0.6Nm	Cable diameter min. 4mm, max 10mm, tightening torque 4 ±0.6Nm
3	Cable diameter min. 9mm, max 16mm, tightening torque 6 ±0.9Nm	Cable diameter min. 4mm, max 10mm, tightening torque 4 ±0.6Nm
4	Tightening torque 3.5 ±0.5Nm	Tightening torque 1.5 ±0.2Nm
5	Includes 1-tap inlet ring K-factor – various, refer to the spec sheet	

[VVV] = Voltage of the product. 480 for 400-480VAC fans, 240 for 200-240VAC
[XXX] = Diameter of the fan wheel

3.2 Product dimensions

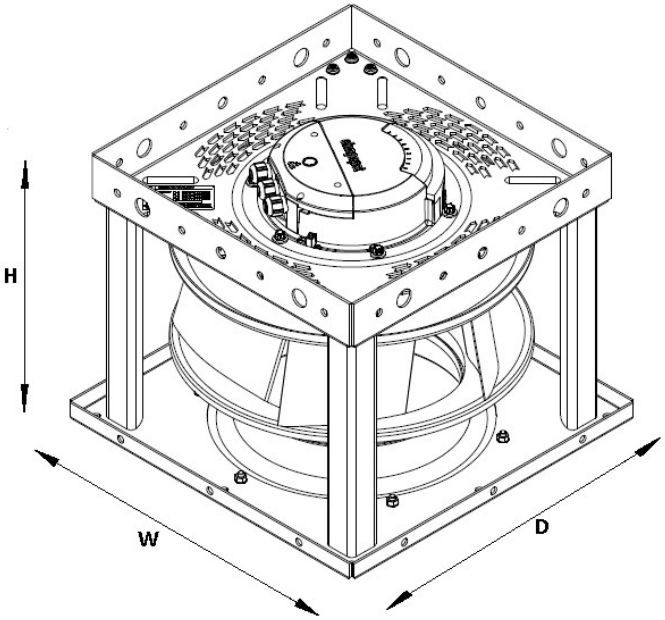

Part Number	W (in)**	D (in)**	H(in)
EG1RVVV310A	19.7	19.7	Depends on the inlet plate orientation, refer to fan spec sheet.
EG1RVVV355A	19.7	19.7	
EG1RVVV400A	19.7	19.7	
EG1RVVV450A	24.8	24.8	
EG1RVVV450C	24.8	24.8	
EG1RVVV500A	24.8	24.8	
EG1RVVV500C	24.8	24.8	
EG1RVVV560A	31.5	31.5	
EG1RVVV560C	31.5	31.5	
EG1RVVV630A	31.5	31.5	

** Not including exhaust and inlet guard dimensions
[VVV] = Voltage of the product. 480 for 400-480VAC fans, 240 for 200-240VAC

- ⇨ The correct variation should be selected for the application.
- ⇨ The variation will be indicated by 2 numbers at the end of the part number.
  EG1RVVVXXXAYY or EG1RVVVXXXCYY
  [VVV] = Voltage of the product. 480 for 400-480VAC fans, 240 for 200-240VAC
  [XXX] = Diameter of the fan wheel
  [YY] = Modular variation
- ⇨ Contact ebm-papst engineers for help with a different variation part number.

ebm-papst Inc. · 100 Hyde Road Farmington CT 06034 · 860-674-1515 · sales@us.ebmpapst.com · www.ebmpapst.us

3.3 Modular EC Plenum Fan Design Variations

Variation Types			
Inlet Plate Flange Direction	Toward Inlet 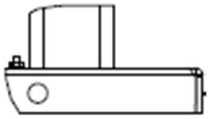		Toward Motor 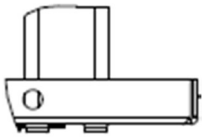
Inlet Ring Design	No tap	1 tap	Piezo
Grill Guards	Inlet 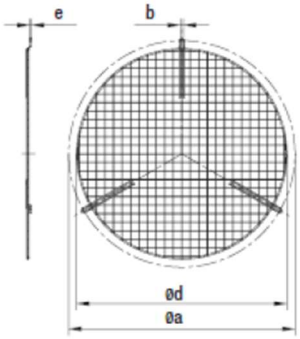		Exhaust 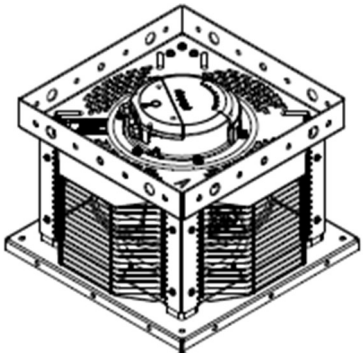

3.4 Nominal Data

Part Number	Phase	Nominal Voltage [VAC]	Nominal Voltage Range [VAC]	Frequency [Hz]	Speed [RPM]	Power input [W]	Current draw at 460VAC [A]	Min Ambient Temperature [°C]	Max Ambient Temperature [°C]
EG1R480310A	3~	460	400..480	50/60	3975	3132	4.3	- 40	40
EG1R480355A					3230	3056	4.2		40
EG1R480400A					2800	3950	5.3		40
EG1R480450A					2440	4607	6.2		40
EG1R480450C					2600	5851	7.8		40
EG1R480500A					2000	4177	5.6		45
EG1R480500C					2255	6292	8.4		40
EG1R480560A					1675	4494	6.0		40
EG1R480560C					1765	5256	7.0		40
EG1R480630A					1505	4540	6.1		40

Part Number	Phase	Nominal Voltage [VAC]	Nominal Voltage Range [VAC]	Frequency [Hz]	Speed [RPM]	Power input [W]	Current draw at 230VAC [A]	Min Ambient Temperature [°C]	Max Ambient Temperature [°C]
EG1R240310A	3~	230	200..240	50/60	3955	3159	8.4	-40	40
EG1R240355A					3230	3012	8.0		40
EG1R240400A					2800	3869	10.3		55
EG1R240450A					2290	3924	10.4		40
EG1R240450C					2600	5893	15.6	-25	40
EG1R240500A					1930	3911	10.4	-40	40
EG1R240500C					2250	6297	16.8	-25	40
EG1R240560A					1585	3802	10.1	-40	40
EG1R240560C					1765	5483	14.6	-25	40

Refer to spec sheet for more information

3.5 Technical features

Part Numbers	EG1RVVVXXXA	EG1RVVVXXXC
Mass	Refer to spec sheet	
Size	Refer to spec sheet	
Motor Size	Refer to spec sheet	
Rotor surface	Painted black	
Electronics housing material	Die-cast aluminum	
Impeller material	Sheet aluminum	
Fan bracket and support material	Sheet steel	
Bracket post material	Extruded aluminum	
Number of blades	5	

ebm-papst Inc. · 100 Hyde Road Farmington CT 06034 · 860-674-1515 · sales@us.ebmpapst.com · www.ebmpapst.us

Direction of rotation	Clockwise, viewed toward rotor	
Type of protection	IP55	
Insulation class	"F"	
Environmental protection class	H1	
Ambient temperature note	Occasional start-up at temperatures between -40C and -25C is permitted. For continuous operation at ambient temperatures below -25C (such as refrigeration applications), use must be made of a fan design with special low-temperature bearings.	
Installation position	Installed position: shaft horizontal; cable glands located to the bottom left side of the unit; rotor down	
Condensate discharge holes	On rotor-side	
Motor bearing	Ball bearing	
Technical features	- Control interface with SELV potential safely disconnected from the mains - Line undervoltage / phase failure detection - Thermal overload protection for electronics/motor - Soft start - Motor current limitation - Alarm relay	
	- Operation and alarm display with LED - External 15-50 VDC input (parameterization) - Integrated PI controller - Configurable inputs/outputs (I/O) - MODBUS V6 - RS-485 MODBUS-RTU - Voltage output 3.3-24 VDC, Pmax = 800 mW	- Output 10 VDC, max. 10 mA - Output for slave 0-10 V - External 24 V input (parameter setting) - External release input - Integrated PID controller - Power limiter - PFC, passive - RS-485 MODBUS-RTU - Control input 0-10 VDC - Control interface with SELV potential safely disconnected from the mains
Touch current acc. IEC 60990 (measuring network Fig. 4, TN system)	<= 3.5mA	
Electrical hookup	Terminal box	
Motor protection	Reverse polarity and locked-rotor protection	
Protection class	I (if protective earth is connected by customer)	
Product conforming to standard	EN 61800-5-1; CE	
Approval	CSA C22.2 No. 77 + CAN/CSAE60730-1; UL 1004-7 + 60730-1; EAC	

For cyclic speed loads, note that the rotating parts of the device are designed for maximum one million load cycles. If you have specific questions, contact ebm-papst for support.

⇨ Use the device in accordance with its degree of protection.

Information on surface quality

The surfaces of the products conform to the generally applicable industrial standard. The surface quality may change during the production period. This has no effect on strength, dimensional stability and dimensional accuracy.

The color pigments in the paints used perceptibly react to UV light over the course of time. This does not however in any way affect the technical properties of the products. The product is to be protected against UV radiation to prevent the formation of patches and fading. Changes in color are not a reason for complaint and are not covered by the warranty.

3.6 Mounting data

⇨ Secure the mounting screws against accidentally coming loose (e.g. by using self-locking screws).

Strength class for mounting screws	Grade 5

Use 3/8"-16 UNC serrated-flange Grade-5 cap screws with mating nuts.

3.7 Transport and storage conditions

⇨ Use the device in accordance with its protection type.

Max. permissible ambient motor temp. (transp./ storage)	+ 80 °C
Min. permissible ambient motor temp. (transp./storage)	- 40 °C

3.8 Electromagnetic compatibility

EMC interference immunity	Acc. to EN 61000-6-2 (industrial environment)
EMC interference emission	Acc. to EN 55022 (Class B, household environment)

If several devices are connected in parallel on the supply side so that the line current of the arrangement is in the range 16 - 75 A, this arrangement conforms to IEC 61000-3-12, provided that the short-circuit power Ssc at the connection point of the customer system to the public power grid is greater than or equal to 250 times the rated output of the arrangement. It is the responsibility of the installation engineer or operator/owner of the device to ensure, if necessary after consultation with the network operator, that this device is only connected to a connection point with an Ssc value greater than or equal to 250 times the rated output of the arrangement.

4. INSTALLATION

WARNING – TO REDUCE THE RISK OF FIRE, ELECTRIC SHOCK, OR INJURY TO PERSONS, OBSERVE THE FOLLOWING:

a) Installation work and electrical wiring must be done by qualified person(s) in accordance with all applicable codes and standards, including fire-rated construction.

b) Sufficient air is needed for proper combustion and exhausting of gases through the flue (chimney) of fuel burning equipment to prevent back drafting. Follow the heating equipment manufacturer's guideline and safety standards such as those published by the National Fire Protection Association (NFPA), and the American Society for Heating, Refrigeration and Air Conditioning Engineers (ASHRAE), and the local code authorities.

c) When cutting or drilling into wall or ceiling, do not damage electrical wiring and other hidden utilities.

d) Ducted fans must always be vented to the outdoors.

e) If this unit is to be installed over a tub or shower, it must be marked as appropriate for the application and be connected to a GFCI (Ground Fault Circuit Interrupter) – protected branch circuit.

4.1 Connecting the mechanical system

CAUTION

Cutting and crushing hazard when removing the device from the packaging

➔ Carefully remove the device from its packaging, only touching the fan housing. Make sure to avoid any shock.

➔ Wear safety shoes and cut-resistant safety gloves.

ebm-papst Inc. · 100 Hyde Road Farmington CT 06034 · 860-674-1515 · sales@us.ebmpapst.com · www.ebmpapst.us

CAUTION
Heavy load when taking out the device
Bodily harm, e.g. back injuries, are possible.
- ➔ Use suitable hoisting equipment to remove the device from its packaging.
- ➔ Use the provided lifting point on top of each cube.

NOTE
Damage to the device from vibration
Bearing damage, shorter service life
- ➔ The fan must not be subjected to force or excessive vibration from sections of the installation.
- ➔ If the fan is connected to air ducts, the connection should be isolated from vibration, e.g. using compensators or similar elements.
- ➔ Ensure stress-free attachment of the fan to the substructure.

⇨ Check the device for transport damage. Damaged devices must no longer be installed.
⇨ Install the undamaged device according to your application.

CAUTION
Possible damage to the device
If the device slips during installation, serious damage can result.
- ➔ Ensure that the device is securely positioned at its place of installation until all fastening screws have been tightened.

⇨ The fan must not be strained on fastening.

4.1.2 Mounting conditions of fan

CAUTION
To reduce risk of fire and to properly exhaust air, be sure to duct air outside – Do not vent exhaust air into spaces within walls or ceilings or into attics, crawl spaces, or garages.

CAUTION
Fan must be mounted in a location where the entrance of drawn in water is unlikely.

CAUTION
Crushing hazard when lifting device.

4.1.3 Installation orientation
⇨ Fan must be mounted shaft horizontal or rotor down.
⇨ Terminal box orientation must be located on the lower right hand or left hand corner when mounted shaft horizontal.

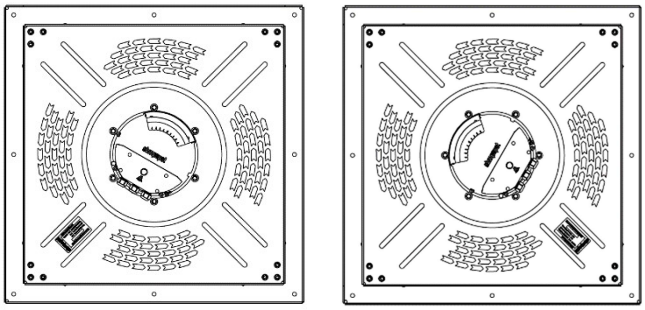

Figure 1: Correct Orientation of the Module EC Plenum Fan

4.2 Installation space
Installation losses may occur if a centrifugal fan is fitted in a confined space. The loss in fan output to be expected can be estimated from the curve shown (Fig. 2).

For boxes with a square cross-section, the hydraulic diameter is to be calculated from the width and height and the value then divided by the impeller diameter. The correction factor for the air flow can then be read off the graph on the basis of this value.

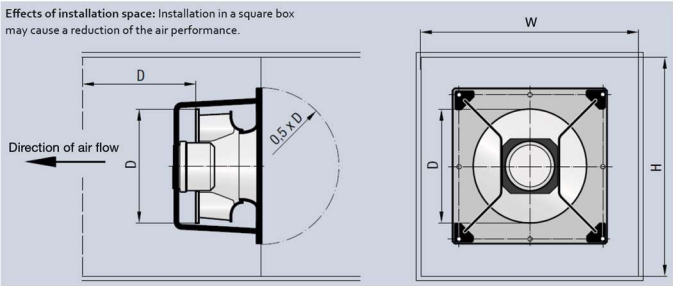

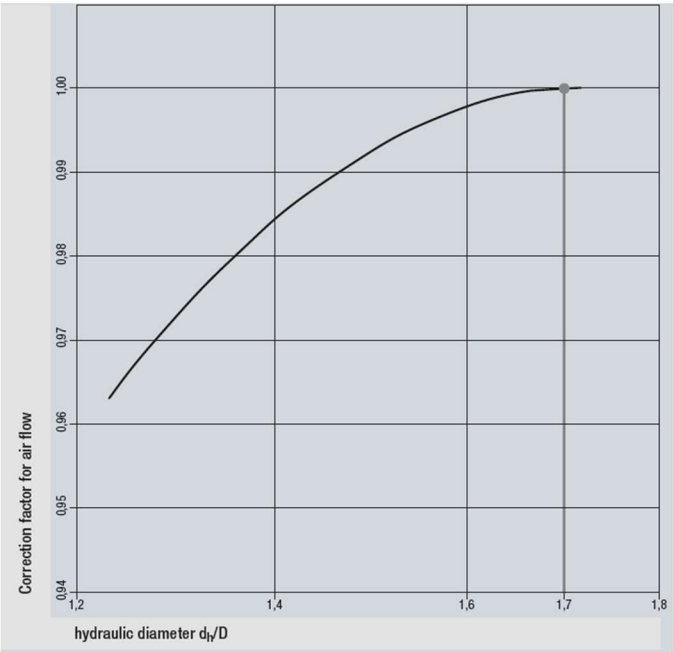

Figure 2: Determination of output loss in confined installation space for Module EC Plenum Fans

d_h	Hydraulic diameter: $d_h = 2 \times B \times H / (B + H)$
B	Width of the installation space
H	Height of the installation space
D	Outer diameter of the fan

4.3 Installation position and attachment of Modular EC Plenum Fans
Modular EC Plenum Fans can be installed with the shaft horizontal or with the shaft vertical with the rotor at the bottom.
⇨ Vertical shaft with rotor at the top on request only.
⇨ Cable glands must always face downward to prevent the ingress of moisture.
⇨ The Modular EC Plenum Fan is designed for installation on the device wall.
⇨ Eight mounting holes are provided on the inlet plate for mounting.
⇨ The correct variation should be selected for the application.

4.3.1 Attachment of fan to pressure wall
⇨ Installation of the fan produces a new oscillatory arrangement.
⇨ This arrangement must not exhibit any impermissibly severe vibration in the speed control range.
⇨ See Section 7 for limit values.
⇨ The transmission of vibration from external parts of the installation to the fan must also be avoided.
⇨ The mechanical design of the pressure wall or air duct must ensure that no resonance occurs in the intended speed control range.

To prevent leakage, it is advisable to seal off the fan from the air duct or pressure wall.

4.3.2 Sealing with edge protection profile
For a Modular Plug Fan, sealing can take the form of edge protection with sealing lips. The edge protection profile is fitted to the edge of the support plate.

ebm-papst Inc. · 100 Hyde Road Farmington CT 06034 · 860-674-1515 · sales@us.ebmpapst.com · www.ebmpapst.us

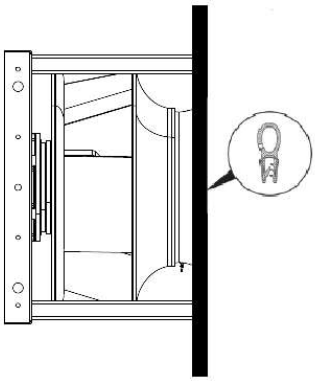

Figure 3: Side view of a Modular EC Plenum Fan and edge protection profile on the intake side

4.3.3 Sealing with elastic sealing material
Sealing can be achieved by attaching a suitable sealing material to the front of the fan.

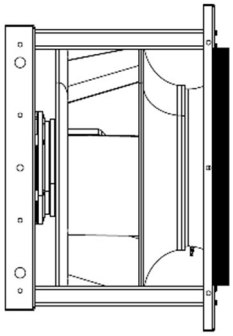

Figure 4: Modular EC Plenum Fan side view of the intake side with foam sealant

4.4 Installation position and attachment of Modular Plug fans with isolation design
Modular Plug fans with isolation design are intended solely for installation on the bottom of the device. They can be installed with either the shaft horizontal or the shaft vertical and with the rotor at the bottom.
Vertical shaft with rotor at the top is only available on request. There are two mounting options for installation with the shaft horizontal:
- ⇨ Fixed floor mounting with flexible intake-side connection
- ⇨ Floor mounting with vibration-absorbing elements and flexible intake-side connection

4.4.1 Attachment of fan to pressure wall
- ⇨ Check the stability of the device structure.
- ⇨ Installation of the fan produces a new oscillatory arrangement.
- ⇨ This arrangement must not exhibit any impermissibly severe vibration in the speed control range.
- ⇨ See Section 7 for limit values.
- ⇨ This also applies to the transmission of vibration from external parts of the installation to the fan.

To prevent leakage, it is advisable to seal off the fan from the pressure wall.

4.4.2 Sealing with elastic connecting elements
Bellow expansion sleeves can be used for the Modular Plug fan with isolation.

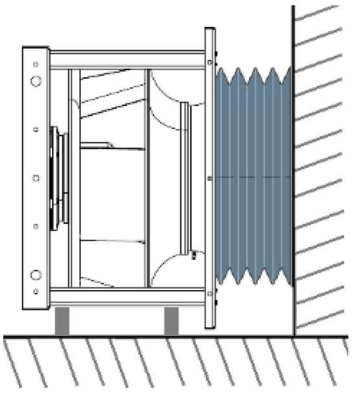

Figure 5: Side view of a Modular EC Plenum Fan with isolation and bellow expansion sleeve on the intake side

4.4.3 Sealing with sealing material
Sealing can be achieved by attaching a suitable sealing material to the front of the fan.

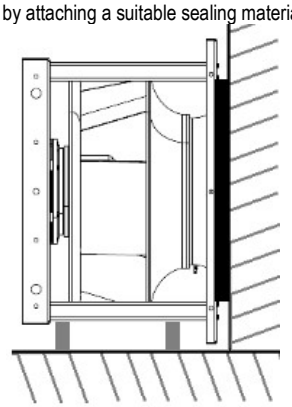

Figure 6: Modular EC Plenum Fan with isolation view of the intake side with sealing material

5 CONNECTION AND START-UP
5.1 Connecting the electrical system

DANGER
Electric voltage on the device
Electric shock
- ➔ Always connect a protective earth first.
- ➔ Check the protective earth.

DANGER
Faulty insulation
Risk of fatal injury from electric shock
- ➔ Use only cables that meet the specified installation requirements for voltage, current, insulation material, capacity etc.
- ➔ Route cables such that they cannot be touched by any rotating parts.

DANGER
Electrical charge (>50 µC) between phase conductor and protective earth connection after switching off supply with multiple devices connected in parallel.
Electric shock, risk of injury
- ➔ Ensure sufficient protection against accidental contact. Before working on the electrical hookup, short the supply and PE connections.

CAUTION
Electrical voltage
The fan is a built-in component and features no electrically isolating switch.
- ➔ Only connect the fan to circuits that can be switched off with an all-pole separating switch.
- ➔ When working on the fan, you must switch off the installation/machine in which the fan is installed and secure it from being switched on again.

ebm-papst Inc. · 100 Hyde Road Farmington CT 06034 · 860-674-1515 · sales@us.ebmpapst.com · www.ebmpapst.us

NOTE
Device malfunctions possible
Route the device's control lines separately from the supply line.
➔ Maintain the greatest possible clearance.
Recommendation: clearance > 10 cm (separate cable routing)

NOTE
Water penetration into leads or wires
Water enters at the cable end on the customer's side and can damage the device.
➔ Make sure that the cable end is connected in a dry environment.

Connect the device only to circuits that can be switched off using an all-pole disconnecting switch.

5.1.1 Prerequisites
⇨ Check whether the information on the nameplate matches the connection data.
⇨ Before connecting the device, make sure the power supply matches the device voltage.
⇨ Only use cables designed for the current level indicated on the nameplate.
For determining the cross-section, note the sizing criteria according to EN 61800-5-1. The protective earth must have a cross-section equal to or greater than that of the phase conductor. We recommend the use of 105 °C cables. Ensure that the minimum cable cross-section is at least AWG 26 / 0.13 mm².

Protective earth contact resistance according to EN 61800-5-1
Compliance with the resistance specifications according to EN 61800-5- 1 for the protective earth connection circuit must be verified in the end application. Depending on the installation situation, it may be necessary to connect an additional protective earth conductor by way of the extra protective earth terminal provided on the device. The protective earth terminal is located on the housing and provided with a protective earth symbol and a hole.

5.1.2 Power supply connection, fuse protection
Assignment of supply cable cross-sections and their required fuses (line protection only, no equipment protection).

Nominal voltage	Safety fuse		Automatic circuit breaker	Wire cross-section	Wire cross-section
	VDE	UL	VDE	mm²	*AWG
3/PE AC 380-480 VAC	16A	15A	C16A	1.5	16
3/PE AC 380-480 VAC	20A	20A	C20A	2.5	14
3/PE AC 380-480 VAC	25A	25A	C25A	4.0	12
3/PE AC 380-480VAC	32A	30A	C32A	6.0	10

*AWG = American Wire Gauge

Nominal voltage	Fuse	Wire cross-section	Wire cross-section
	UL	mm²	*AWG
3/PE AC 200-240 VAC	15A	1.5	16
3/PE AC 200-240 VAC	20A	2.5	14
3/PE AC 200-240 VAC	30A	4.0	12
3/PE AC 200-240 VAC	30A	6.0	10

*AWG = American Wire Gauge

5.1.3 Reactive currents
Because of the EMC filter integrated for compliance with EMC limits (interference emission and interference immunity), idle currents in the mains cable can be measured even when the motor is at a standstill and the mains voltage is switched on.

5.1.4 Residual current circuit breaker (RCCB)
If the use of a residual current device (RCD) is required in your installation, only AC/DC-sensitive residual current devices (type B or B+) are permissible. As with variable frequency drives, residual current devices cannot provide personal safety while operating the device. When the device power supply is switched on, pulsed charging currents from the capacitors in the integrated EMC filter can lead to the instant tripping of residual current devices. We recommend the use of residual current circuit breakers (RCCB) with a trip threshold of 300 mA and delayed tripping (super-resistant, characteristic K).

5.1.5 Leakage current
For asymmetrical power systems or if a phase fails, the leakage current can increase to a multiple of the nominal value.

5.1.6 Locked-rotor protection
Due to the locked-rotor protection, the start-up current (LRA) is equal to or less than the nominal current (FLA).

5.2 Connection in terminal box
Wiring must follow the local National Electrical Code, ANSI/NFPA 70.

WARNING
To reduce the risk of fire or electric shock, do not use this fan with any solid-state speed control device.

5.2.1 Preparing cables for connection
Only strip the cable as far as necessary, ensuring that the cable gland is sealed and there is no strain on the connections. For tightening torques, see **Chapter 3.1 Product drawing**.

NOTE
Tightness and strain relief are dependent on the cable used
➔ This must be checked by the user

ebm-papst Inc. · 100 Hyde Road Farmington CT 06034 · 860-674-1515 · sales@us.ebmpapst.com · www.ebmpapst.us

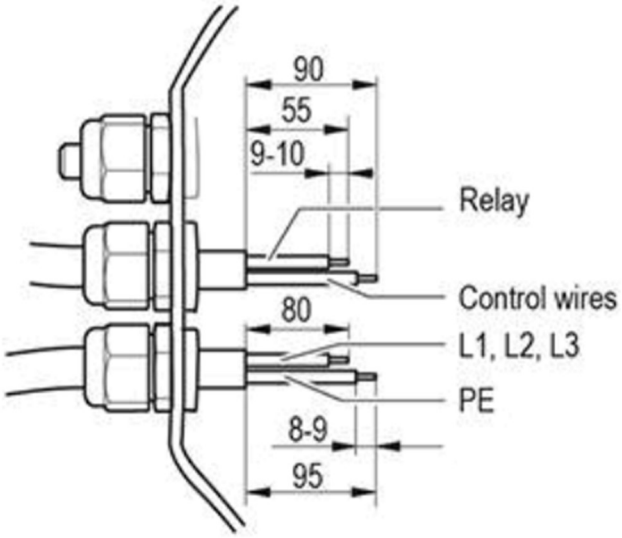

Figure 7: Recommended stripped lengths in mm (inside terminal box)

5.2.2 Cable routing

No water may penetrate along the cable in the direction of the cable gland.

NOTE

Damage caused by moisture penetration.

Moisture can penetrate into the terminal box if water is constantly present at the cable glands.

- ➔ To prevent the constant accumulation of water at the cable glands, the cable should be routed in a U-shaped loop wherever possible.
- ➔ If this is not possible, a drip edge can be produced by fitting a cable tie directly in front of the cable gland for example.

When routing the cable, the cable gland must be located on the bottom right, see **Chapter 4.1.3 Installation orientation.**

5.3 EG1RVVVXXXC connection information

5.3.1 Connect cables to terminal

WARNING

Live terminals and connections even with device switched off

Electric shock

- ➔ Wait five minutes after disconnecting the voltage at all poles before opening the terminal box.

- ⇨ Remove the cap from the cable gland.
- ⇨ Only remove caps where cables are fed in.
- ⇨ Equip the cable glands with the seals provided in the terminal box.
- ⇨ Route the wire(s) (not included in scope of delivery) into the terminal box.
- ⇨ First connect the "PE" (protective earth).
- ⇨ Connect the wires to the corresponding terminals.

Use a screwdriver to do so. When connecting, ensure that no wire ends fan out.

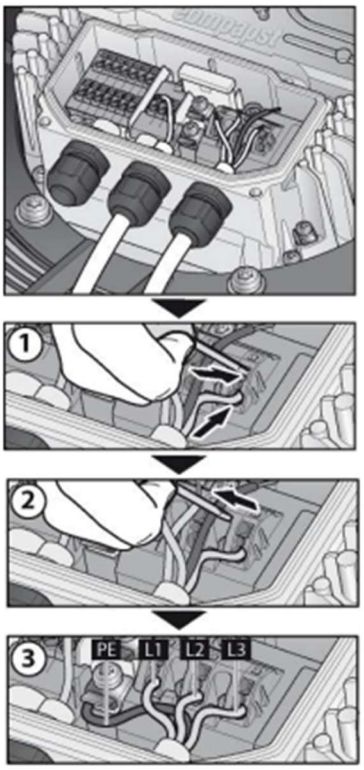

Figure 8: Connecting wires to terminals

- ⇨ Seal the terminal box.

ebm-papst Inc. · 100 Hyde Road Farmington CT 06034 · 860-674-1515 · sales@us.ebmpapst.com · www.ebmpapst.us

5.3.2 Connection screen

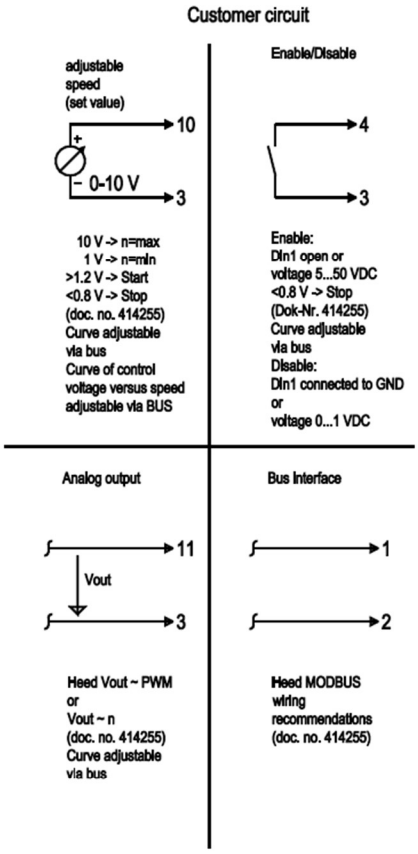

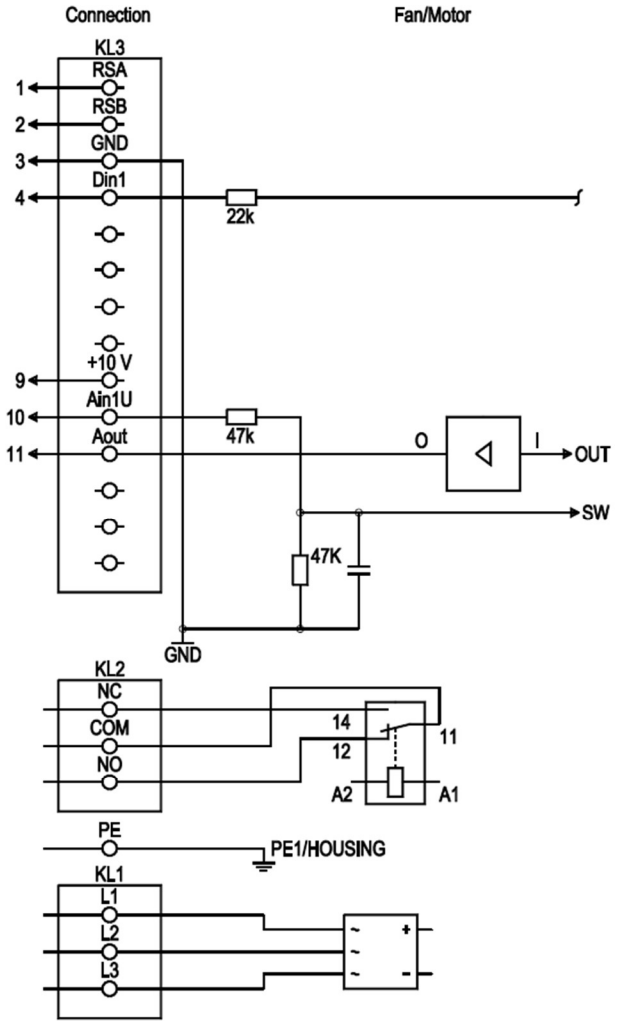

Terminal box connection diagram

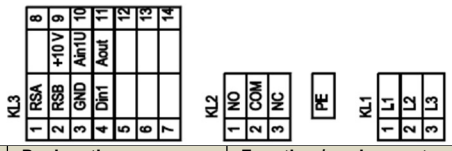

No.	Conn.	Designation	Function / assignment
KL1	1, 2, 3	L1, L2, L3	Power supply, phase, see nameplate for voltage range
PE	PE	PE	Protective earth
KL2	1	NO	Status relay, floating status contact, option 1: make for failure, option 2: make for error for run monitor
KL2	2	COM	Status relay, floating status contact, common connection, contact rating 250 VAC / 2 A (AC1) / min. 10 mA; basic insulation on supply side and reinforced insulation on control interface side
KL2	3	NC	Status relay, floating status contact, option 1: break for failure, option 2: break for error message for run monitor
KL3	1	RSA	RS485 interface for MODBUS, RSA; SELV
KL3	2	RSB	RS485 interface for MODBUS, RSB; SELV
KL3	3	GND	Reference ground for control interface; SELV
KL3	4	Din1	Digital input 1: enable electronics, enable: pin open or applied voltage 5-50 VDC disable: bridge to GND or applied voltage < 1 VDC reset function: triggers software reset after a level change to < 1 VDC; SELV
KL3	5	-	
KL3	6	-	
KL3	7	-	
KL3	8	-	
KL3	9	10V/max. 10 mA	Voltage output, power supply for external devices (e.g. potentiometers), SELV
KL3	10	Ain1U	Analog input 1, set value: 0-10 V, Ri = 100 kΩ, adjustable curve; SELV
KL3	11	Aout	Analog output 0-10 VDC, max. 5 mA, output of current motor modulation level / motor speed adjustable curve; SELV
KL3	12	-	-
KL3	13	-	-
KL3	14	-	-

ebm-papst Inc. · 100 Hyde Road Farmington CT 06034 · 860-674-1515 · sales@us.ebmpapst.com · www.ebmpapst.us

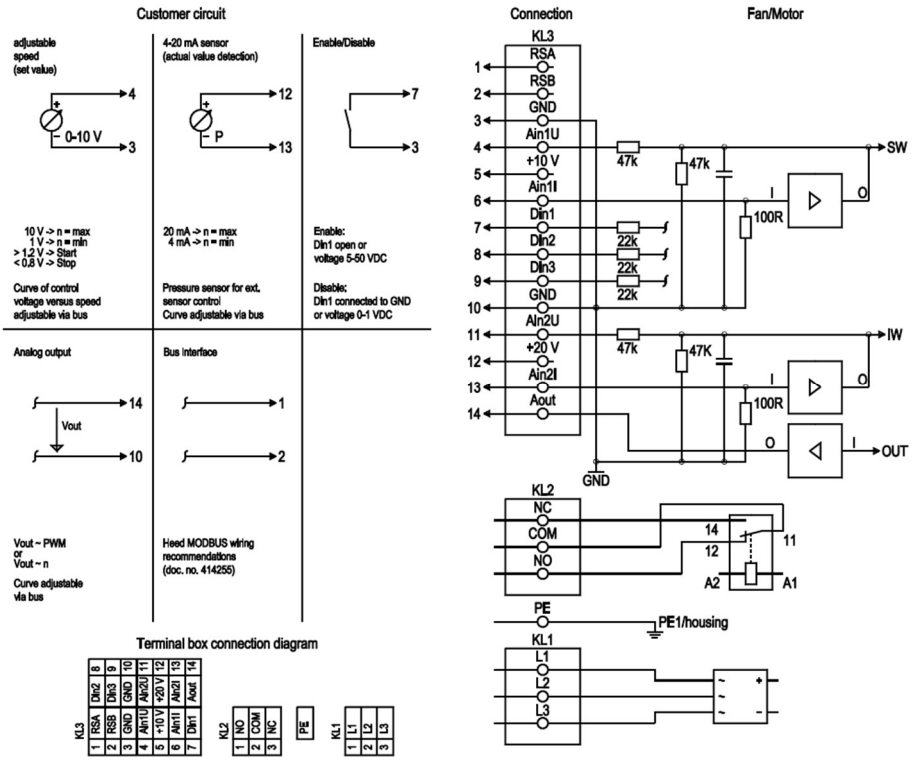

No.	Conn.	Designation	Function / assignment
KL1	1, 2, 3	L1, L2, L3	Power supply, phase, see nameplate for voltage range
PE	PE	PE	Protective earth
KL2	1	NO	Status relay, floating status contact, make for failure
KL2	2	COM	Status relay, floating status contact, common connection, contact rating 250 VAC / 2 A (AC1) / min. 10 mA; basic insulation on supply side and reinforced insulation on control interface side
KL2	3	NC	Status relay, floating status contact, break for failure
KL3	1	RSA	RS485 interface for MODBUS, RSA; SELV
KL3	2	RSB	RS485 interface for MODBUS, RSB; SELV
KL3	3/10	GND	Reference ground for control interface; SELV
KL3	4	Ain1 U	Analog input 1, set value: 0-10 V, Ri = 100 kΩ, adjustable curve, only usable as alternative to input Ain1 I; SELV
KL3	5	+ 10 V	Fixed voltage output 10 VDC, +10 V ± 3%, max. 10 mA, short-circuit-proof, power supply for external devices (e.g. pot); SELV
KL3	6	Ain1 I	Analog input 1, set value: 4-20 mA, Ri = 100 Ω, adjustable curve, only usable as alternative to input Ain1 U; SELV
KL3	7	Din1	Digital input 1: enable electronics, enable: pin open or applied voltage 5-50 VDC disable: bridge to GND or applied voltage < 1 VDC reset function: triggers software reset after a level change to < 1 VDC; SELV
KL3	8	Din2	Digital input 2: Switching parameter sets 1/2, according to EEPROM setting, the valid or used parameter set can be selected via bus or via digital input DIN2. Parameter set 1: pin open or applied voltage 5-50 VDC Parameter set 2: bridge to GND or applied voltage < 1 VDC; SELV
KL3	9	Din3	Digital input 3: Direction of action of integrated controller, according to EEPROM setting, the direction of action of the integrated controller can be selected as normal/inverse via bus or digital input Normal: Pin open or applied voltage 5-50 VDC Inverse: Bridge to GND or applied voltage < 1 VDC; SELV
KL3	11	Ain2 U	Analog input 2, measured value: 0-10 V, Ri = 100 kΩ, adjustable curve, only usable as alternative to input Ain2 I; SELV
KL3	12	+ 20 V	Fixed voltage output 20 VDC, +20 V +25/-10%, max. 50 mA, short-circuit-proof, power supply for external devices (e.g. sensors); SELV Alternatively: +24 VDC input for parameterization without line voltage
KL3	13	Ain2 I	Analog input 2, measured value: 4-20 mA, Ri = 100 Ω, adjustable curve, only usable as alternative to input Ain2 U; SELV
KL3	14	Aout	Analog output 0-10 VDC, max. 5 mA, output of current motor modulation level / motor speed adjustable curve; SELV

ebm-papst Inc. · 100 Hyde Road Farmington CT 06034 · 860-674-1515 · sales@us.ebmpapst.com · www.ebmpapst.us

5.4 EG1RVVVXXXA Connection information

5.4.1 Connect cables to terminals

WARNING
Live terminals and connections even with device switched off
Electric shock
➔ Wait five minutes after disconnecting the voltage at all poles before opening the terminal box.

⇨ Open the terminal box.
⇨ Remove the cap from the cable gland.
⇨ Only remove caps where cables are fed in.

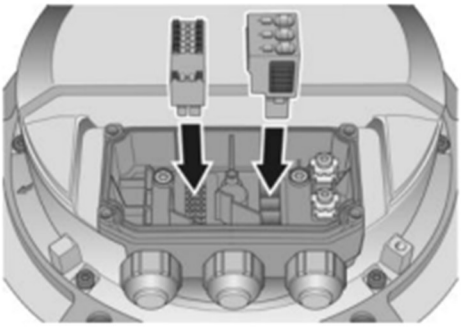

Figure 9: Fit the connector in the terminal box

⇨ Fit the cable glands with the seals provided in the terminal box.
⇨ Route the cable(s) (not included in the scope of delivery) into the terminal box.
⇨ Ensure separate routing of the supply cable(s) and the cables for status contact and control interface. Depending on the requirements for the end device, the physical separation of these cables in the terminal box may be mandatory. Use the partitions inside the terminal box as an aid to routing for this purpose.
⇨ First connect the protective earth "PE"
⇨ Connect the cables to the corresponding terminals. Use a screwdriver to do so. When connecting, make sure the wires do not splay out. Insert the strands until they meet with resistance.

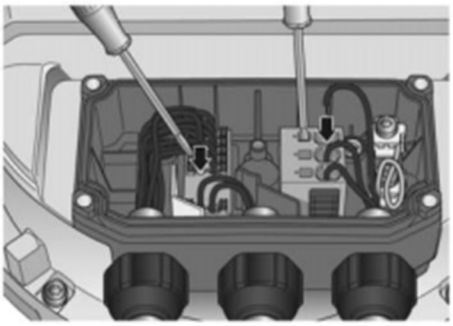

Figure 10: Connection of cables at terminals

⇨ There must not be any tensile stress between the terminal and the cable gland. The cable must be provided with strain relief.
⇨ The cable glands must be tight.
⇨ Fit the terminal box cover, making sure that the sealing surfaces are clean.
⇨ Screw in the four screws (for tightening torque, see **Chapter 3.1 Product drawing).**

ebm-papst Inc. · 100 Hyde Road Farmington CT 06034 · 860-674-1515 · sales@us.ebmpapst.com · www.ebmpapst.us

5.4.2 Connection screen

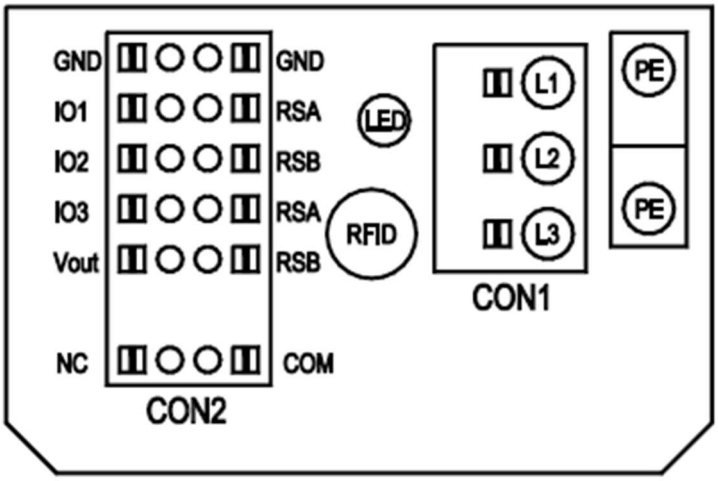

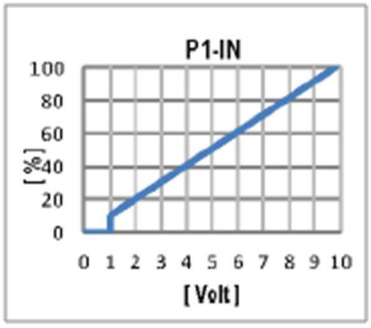

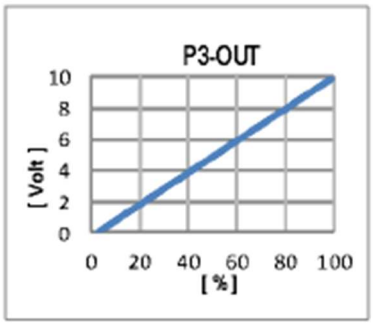

No.	Conn.	Designation	Function / assignment
	CON1	L1, L2, L3	Power supply, phase, see nameplate for voltage range
	PE	PE	Protective earth
	CON2	RSA	RS485 interface for MODBUS, RSA; SELV
	CON2	RSB	RS485 interface for MODBUS, RSB; SELV
	CON2	GND	Reference ground for control interface, SELV
	CON2	IO1	Function parameterizable (see “Optional interface functions” table) Factory setting: Digital input - high active, function: Disable input, SELV - inactive: Pin open or applied voltage < 1.5 VDC - active: applied voltage 3.5-50 VDC Reset function: Triggering of error reset on change of state from "enabled" to "disabled"
	CON2	IO2	Function parameterizable (see “Optional interface functions” table) Factory setting: Analog input 0-10 V / PWM, Ri=100 kΩ, function: Set value Characteristic curve parameterizable (see input characteristic curve P1-IN), SELV
	CON2	IO3	Function parameterizable (see “Optional interface functions” table) Factory setting: Analog output 0-10 V, max. 5 mA, function: Fan modulation level Characteristic curve parameterizable (see output characteristic curve P3-OUT), SELV
	CON2	Vout	Voltage output 3.3-24 VDC ±5%, Pmax=800 mW, voltage parameterizable Factory setting: 10 VDC short-circuit-proof, supply for external devices, SELV alternatively: 15-50 VDC input for parameterization via MODBUS without line voltage
	CON2	COM	Status relay, floating status contact, common connection, contact rating 250 VAC / 2 A (AC1) / min. 10 mA, reinforced insulation on supply side and on control interface side
	CON2	NC	Status relay, floating status contact, break for failure
		LED	green: status = good, ready for operation orange: status = warning red: status = failure
		P1-IN	Input characteristic curve
		P3-OUT	Output characteristic curve

ebm-papst Inc. · 100 Hyde Road Farmington CT 06034 · 860-674-1515 · sales@us.ebmpapst.com · www.ebmpapst.us

5.4.3 Configuration options

○ configurable option

For further information and additional functions see EC Control Software, Fan-Set-App, or MODBUS Parameter Specification V6.3

CON2	configurable IO mode	electrical specification	MODBUS Register for IO mode configuration	configurable IO functions: normal / inverse														
				D101 [...]	D147 [...]	D104 [...]	D12E [...]	D148 [...]	D16C [...]	D16A [...]	(selected directly via IO mode)	(selected directly via IO mode)	D130 [0]	D130 [1]	D130 [2]	D130 [5]	D00C [1]	D130 [4]
						INPUT						OUTPUT						
				source: set value	source: sensor value	switch: parameter set: #1 / #2	switch: control function: heating (pos.) cooling (neg.)	switch: direction of rotation: cw / ccw	switch: set value source	switch: fan enable / disable	signal: tach out	signal: diagnostics out	signal: fan modulation level %	signal: actual speed	signal: system modulation level %	signal: remote control output 0-10V	pulse input for auto-adressing	pulse output for auto-adressing
IO1	○ **Din1 (active high)**: digital input	active: applied voltage 3,5-50VDC, SELV not active: pin open or applied voltage < 1,5VDC	D158 [0]			○	○	○	○	○							○	
	○ **Ain1 0-10V/PWM**: analog input	Ri = 100K, characteristic curve parameterizable, f_{PWM} = 1k..10KHz, SELV	D158 [2]	○	○													
	○ **Tach out** (open collector output)	Umax = 50VDC, Imax = 20mA, SELV	D158 [5]								○							
	○ **Diagnostics out** (open collector output)	Umax = 50VDC, Imax = 20mA, SELV	D158 [6]									○						
IO2	○ **Din2 (active high)**: digital input	active: applied voltage 3,5-50VDC, SELV not active: pin open or applied voltage < 1,5VDC	D159 [0]			○	○	○	○	○								
	○ **Ain2 0-10V/PWM**: analog input	Ri = 100K, characteristic curve parameterizable, f_{PWM} = 1k..10KHz, SELV	D159 [2]	○	○													
	○ **Ain2 4-20mA**: analog input	Ri = 125R, characteristic curve parameterizable, SELV	D159 [3]															
IO3	○ **Din3 (active high)**: digital input	active: applied voltage 3,5-50VDC, SELV not active: pin open or applied voltage < 1,5VDC	D15A [0]			○	○	○	○	○								
	○ **Din3 (active low)**: digital input	active: applied voltage < 1,5VDC, SELV not active: pin open or applied voltage 3,5-50VDC	D15A [1]															
	○ **PWMin3**: digital input idle level high	PWM = 40Hz - 10kHz, characteristics parameterizable active: pin open or applied voltage 3,5-50VDC not active: applied voltage < 1,5VDC, SELV	D15A [7]	○														
	○ **PWMin3**: digital input idle level low	40Hz - 10kHz, characteristics parameterizable active: applied voltage 3,5-50VDC not active: pin open or applied voltage < 1,5VDC, SELV	D15A [8]	○														
	○ **Aout3 0-10V**: analog output	function parameterizable, max. 5mA, max output frequency 300Hz, SELV	D15A [4]										○	○	○	○		○
	○ **Tacho out** (pulses), analog output	0-10V max. 5mA, max output frequency 300Hz, SELV	D15A [5]								○							
	○ **Diagnostics out** (pulses)	0-10V max. 5mA, max output frequency 300Hz, SELV	D15A [6]									○						
RSA RSB	RS485 bus connection,	MODBUS RTU, specification V6.3, SELV		○		○	○	○	○	○								
Vout	voltage output	voltage parameterizable 3,3...24VDC +/- 5%, Pmax=800mW, short-circuit-proof, supply for external devices, SELV	D16E [...]															
	alternatively: Input auxillary power supply for parameterization via RS485/MODBUS RTU without line voltage	15...50VDC																

ebm-papst Inc. · 100 Hyde Road Farmington CT 06034 · 860-674-1515 · sales@us.ebmpapst.com · www.ebmpapst.us

ebmpapst

5.4.4 Equivalent circuit diagrams

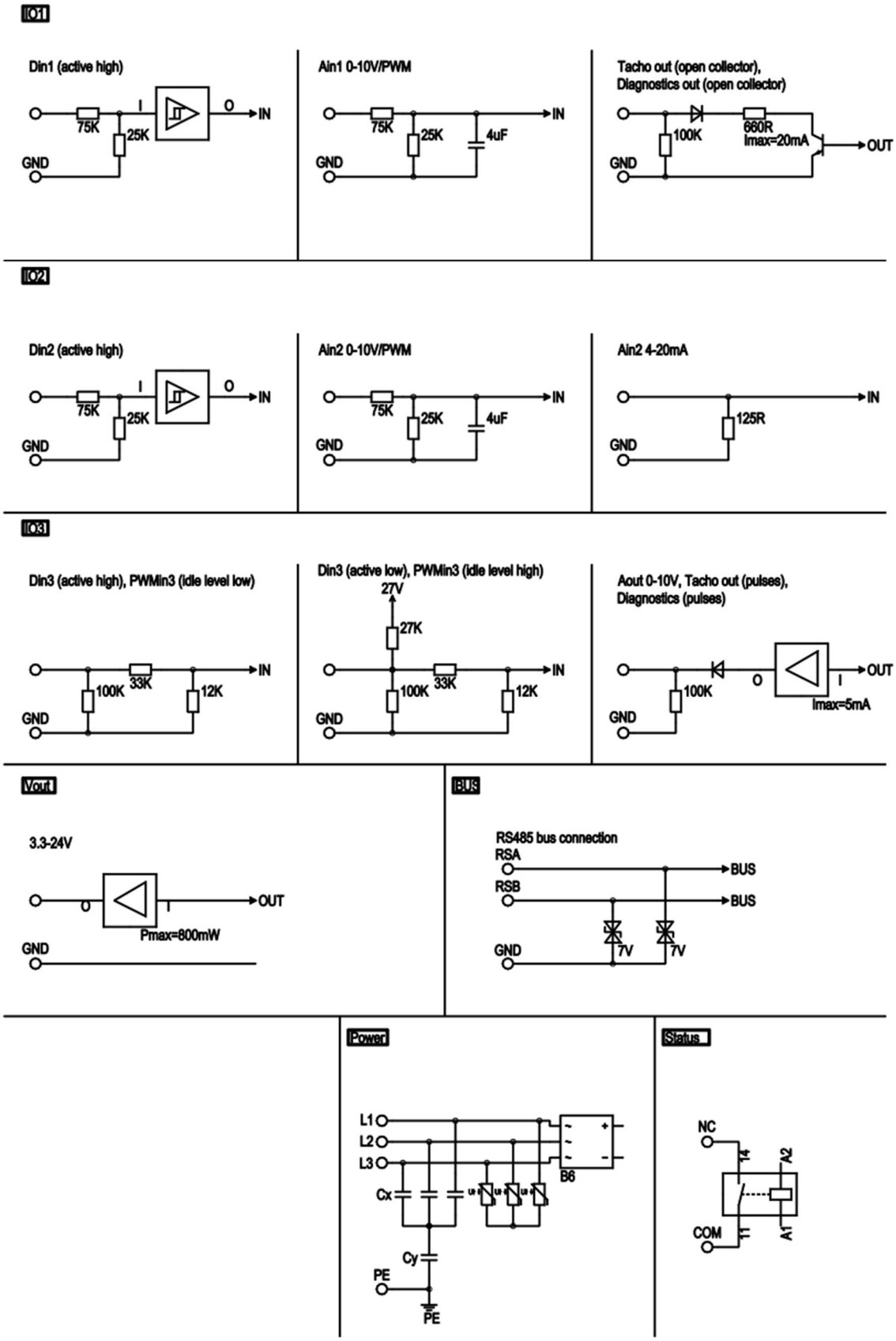

ebm-papst Inc. · 100 Hyde Road Farmington CT 06034 · 860-674-1515 · sales@us.ebmpapst.com · www.ebmpapst.us

5. Recommendations for electrical hookup of a Modular EC Plenum Fan

DANGER
The fans are to be provided with individual line protection.

Refer to **Chapter 5.1.2 Power supply connection, fuse protection for selection** of appropriate line protection fuses.

The simplest form of wiring for the fan assembly is to have a separate power supply connection for each individual fan and to connect all 0-10 V inputs in parallel.

NOTE
Suggested wiring
- ➔ Note the following for 0-10 V wiring: Wire all 0-10 V inputs in parallel (e.g. with a patch panel).
- ➔ Note the following for BUS wiring: RS485 (RSA, RSB, GND) serial wiring with termination in accordance with the specifications of MODBUS.org (MODBUS over serial line spec).

5.6 Factory settings
Factory settings with which the device is pre-set by ebm-papst.

Control mode parameter set 1	PWM control
Control mode parameter set 2	PWM control
Fan/device address	01
Max. PWM/%	100
Min. PWM/%	5
Save set value to EEPROM	Yes
Set value control	Analog (linear)
Control function parameter set 1	Positive (heating)
Control function parameter set 2	Positive (heating)

5.7 Checking the connections
- ⇨ Ensure isolation from supply (all phases).
- ⇨ Make sure a restart is impossible.
- ⇨ Check the cables for proper fit.
- ⇨ Screw the terminal box cover back on again. Terminal box tightening torque, see **Chapter 3.1 Product drawing**.
- ⇨ Route the cables in the terminal box so that the terminal box cover closes without resistance.
- ⇨ Use all screw plugs. Insert the screws by hand to avoid damage to the threads.
- ⇨ Make sure the terminal box is completely closed and sealed and that all screws and cable glands have been properly tightened.

5.8 Switching on device
The device may only be switched on if it has been installed properly and in accordance with its intended use, including the required safety mechanisms and professional electrical connection. This also applies for devices which have already been equipped with plugs and terminals or similar connectors by the customer.

WARNING
Hot motor housing
Risk of fire
- ➔ Ensure that no combustible or flammable materials are located close to the fan.

- ⇨ Before switching on, check the device for visible external damage and make sure the protective devices are functional.
- ⇨ Check the fan's air flow paths for foreign matter and remove any foreign matter found.
- ⇨ Apply the nominal supply voltage.
- ⇨ Start the device by changing the input signal.

NOTE
Damage to the device from vibration
Bearing damage, shorter service life
- ➔ Low-vibration operation of the fan must be ensured over the entire speed control range.
- ➔ Severe vibration can arise for instance from inexpert handling, transportation damage and resultant imbalance or be caused by component or structural resonance.
- ➔ Speed ranges with excessively high vibration levels and possibly resonant frequencies must be determined in the course of fan commissioning.
- ➔ Either run through the resonant range as quickly as possible with speed control or find another remedy.
- ➔ Operation with excessively high vibration levels can lead to premature failure.
- ➔ The maximum permissible vibration should be checked at intervals of 6 months.

See **Chapter 7. Vibration Information** on how to perform the vibration test.

5.9 Switching off the device
Switching off the device during operation:
- ⇨ Switch off the device via the control input.
- ⇨ Do not switch the motor (e.g. in cyclic operation) on and off via power supply.

Switching off the device for maintenance work:
- ⇨ Switch off the device via the control input.
- ⇨ Do not switch the motor (e.g. in cyclic operation) on and off via power supply.
- ⇨ Disconnect the device from the supply voltage.
- ⇨ When disconnecting, be sure to disconnect the earth wire connection last.

6. INTEGRATED PROTECTIVE FUNCTIONS
The integrated protective functions cause the motor to switch off automatically in case of faults described in the table.

Malfunctions	Description/Function of safety feature
Rotor position detection error	An automatic restart occurs.
Locked rotor	After the blockage is removed, the motor restarts automatically.
Line under-voltage (mains input voltage outside of permitted nominal voltage)	If the mains supply voltage returns to permitted values, the motor restarts automatically.
Phase failure	A phase of the supply voltage fails for at least 5s. If all phases are correctly supplied again, the motor automatically restarts after 10-40s.

7. VIBRATION INFORMATION
7.1. General characteristic of vibration

7.1.1 Vibration limits
• The BV (balance and vibration) grade of ebm-papst RadiPac fans is BV-3 (reference AMCA 204 - Balance Quality and Vibration Levels for Fans).
• Vibration velocities per BV-3 grades are stated in AMCA 204 Table 8.3 – Vibration Limits for In-situ Tests.

Condition	(mm/s) **RMS**
Startup	6.3
Alarm	11.8
Shutdown	12.5

7.1.2 Basic Principles

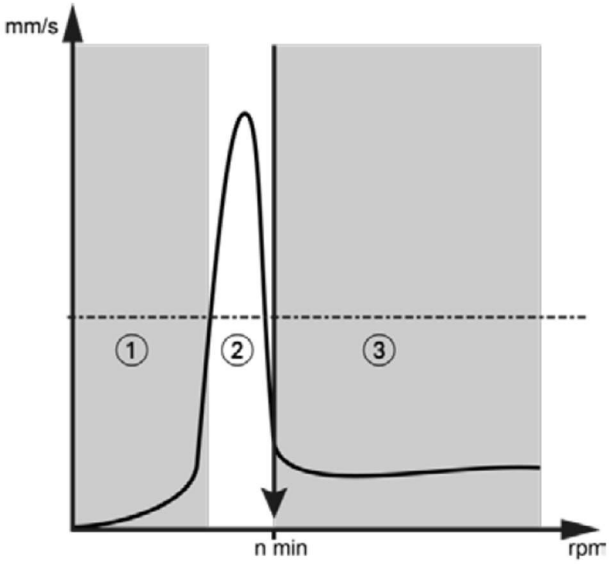

ebm-papst Inc. · 100 Hyde Road Farmington CT 06034 · 860-674-1515 · sales@us.ebmpapst.com · www.ebmpapst.us

Figure 11: Example of a vibration curve over the speed range.

① **Range below resonant frequency:**
In this range the vibration severity is below the resonance frequency. Operation of the fan is possible in this range.

② **Range close to the resonant frequency:**
In this speed range, the vibration velocity could be well above the condition limit

If it is, there is no immediate damage to the device, but lengthy operation in this range will shorten the overall service life. High noise levels occur.

If the vibration is above the condition limit, this speed range should be passed through as quickly as possible! Sustained operation in this range must always be avoided!

③ **Range above resonant frequency:**

The speed range in which the vibration level is well below the condition limit. Operation of the fan is possible in this range.

7.2 Characteristics of vibration of a Modular EC Plenum Fan installed in system
When installing ventilation systems on or in buildings, it is often the case that no consideration is given to the fact that the vibrations of the building, of the actual ventilation system and of the fan influence one another.

It should be remembered that installation on site creates a new, additional spring-mass system that may behave differently than that of the individual fan.

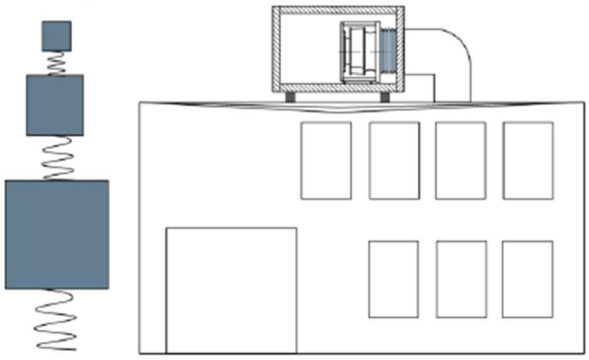

Figure 12: Oscillatory configuration: Fan, ventilation unit, building

The following generally applies:
- It is essential to know the fan operating speed in the application.
- Vibration measurement is to be performed on commissioning (see **Section 7.3 In situ vibration measurement**).
- The vibrations must be measured under all the relevant operating conditions (e.g. different speeds, fluctuating back pressure).
- It must be ensured that vibration of the installation as a whole does not have any negative effects on use of the fan.

7.3 In situ vibration measurement
The resonance characteristics of the fans must be checked in operation and in interaction with their environment and modified if necessary. The vibration level has to be determined and regions above the limit value avoided during normal operation.

The vibration level of the fan is to be measured using a suitable vibration sensor. The vibration characteristics must be determined at least in the axial direction and transversely thereto.

Measurement of the vibration in all three axes is recommended and should be performed over the entire speed range in order to obtain a complete picture of the vibrations occurring in the application.
⇨ Recommend a repetition of measurements: Every 6 months.
⇨ Set ramp up time to 3 minutes and record vibration as the fan starts up or increase the speed gradually, by 5% for example, and note down the readings in a table.

Speed [%]	Speed [rpm]	Vibration velocity in axis direction [mm/s] (rms value)	Vibration velocity perpendicular to axis direction [mm/s] (rms value)
10%			
15%			
..			
100%			

7.3.2. Vibration measurement
An appropriate method is to measure at the motor fastening diameter on the motor support plate in the direction of the motor axis of rotation and perpendicular to this.
⇨ Vibration should be tested once installed on site.
⇨ Vibration should be tested once the cube has been properly bolted to the floor and to each other.

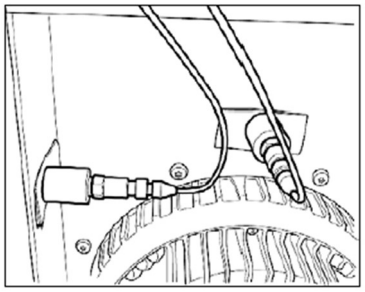

Figure 13: Vibration measurements on a Modular EC Plenum Fan. The arrangement of the sensors depends on the device concerned and the installation situation.

Measurements can also be taken perpendicular to the motor axis by fitting a cube-shaped iron block with a magnet on the motor support plate. The magnetic vibration sensor is then attached to this iron block.

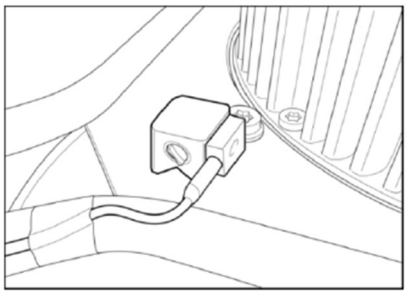

Figure 14: Magnet as measuring aid

A more convenient method is to use a vibration sensor that takes measurements in all three directions from one measuring point (triaxial sensor)

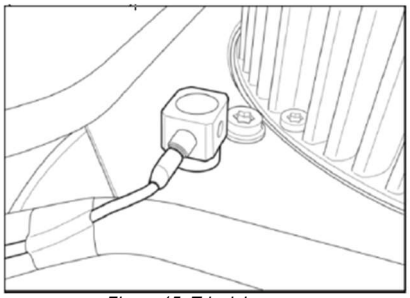

Figure 15: Triaxial sensor

7.4 Full fan array
When the full array is installed, vibration in axial and radial dimensions should be measured at each fan to confirm it is under the selected condition limit. If the vibration exceeds the condition limit value, additional bracing will need to be installed.

ebm-papst Inc. · 100 Hyde Road Farmington CT 06034 · 860-674-1515 · sales@us.ebmpapst.com · www.ebmpapst.us

7.5 Action to be taken in the event of excessive vibrational loading

- ⇨ Avoid dropping below minimum speed as determined by the vibration testing.
- ⇨ Pass through point of resonance quickly on start-up
- ⇨ Always avoid resonant operation.
- ⇨ Modify the design of the device/installation, e.g. using reinforcement braces.
- ⇨ Ask the experts at ebm-papst.

8. MAINTENANCE, MALFUNCTIONS, POSSIBLE CAUSES AND REMEDIES

Do not perform any repairs on your device. Return the device to ebm-papst for repair or replacement.

When device is returned, device should be reinstalled per the instructions in this manual.

WARNING

Terminals and connections have voltage even with a unit that is shut off

Electric shock

- ➔ Wait five minutes after disconnecting the voltage at all poles before opening the device.

CAUTION

If control voltage is applied or a speed setpoint is stored, the motor automatically restarts, e.g. after a power failure.

Danger of injury

- ➔ Keep out of the danger zone of the device.
- ➔ When working on the device, switch off the mains supply voltage and secure the latter from being switched on again.
- ➔ Wait until the device stops.
- ➔ After working on the device, remove any used tools or other objects from the device.

NOTE

If the device is not operated for a lengthy period in installed condition in a dry environment, it is to be started up and operated at full speed for one hour at least every four months. If the device is not operated for a lengthy period in installed condition in a damp environment (e.g. outdoors), it is to be started up and operated at full speed for at least three hours once a month to move the bearings and allow any condensate that may have ingressed to evaporate.

Malfunction/error	Possible cause	Possible remedy
Impeller not running smoothly	Imbalance in rotating parts	Clean the device; if imbalance is still evident after cleaning, replace the device. If you have attached any weight clips during cleaning, make sure to remove them afterwards.
Motor does not turn	Mechanical blockage	Switch off, de-energize, and remove mechanical blockage.
	Mains supply voltage faulty	Check mains supply voltage, restore power supply. Important! The error message resets automatically. The device starts up again automatically without advance warning.
	Faulty connection	De-energize, correct connection, see connection diagram.
	Motor winding broken	Replace device
	Insufficient cooling	Improve cooling. Let the device cool down. To reset the error message, switch off the mains supply voltage for a min. of 25 s and switch it on again. Alternatively, reset the error message by applying a control signal of <0.5 V to DIN1 or by short circuiting Din1 to GND.
	Ambient temperature too high	Reduce the ambient temperature. Let the device cool down. To reset the error message, switch off the mains supply voltage for a min. of 25 s and switch it on again. Alternatively, reset the error message by applying a control signal of <0.5 V to DIN1 or by short circuiting Din1 to GND.
	Unacceptable operating point (e.g. counter pressure is too high)	Correct the operating point. Let the device cool down. To reset the error message, switch off the mains supply voltage for a min. of 25 s and switch it on again. Alternatively, reset the error message by applying a control signal of <0.5 V to DIN1 or by short circuiting Din1 to GND.

If you have any other problems, contact ebm-papst.

8.1 EG1RVVVXXXA Warning/status codes

The LED on the electronics housing shows the motor status with various colors and flash codes. The flash codes have a frequency of 2 Hz. Each flash code is followed by a pause lasting 3 seconds. The following colors are used:

Green: no warning or fault.
Orange: There is a warning. No user intervention is required for warnings.
Red: There is at least one error.

See the following tables. If there are multiple simultaneous errors, their associated flash codes are displayed in succession. If there are simultaneous warnings and errors, only the errors are displayed.

ebm-papst Inc. · 100 Hyde Road Farmington CT 06034 · 860-674-1515 · sales@us.ebmpapst.com · www.ebmpapst.us

8.1.1 Warning codes

Number of pulses	Motor status - LED orange	Message at status relay
1	Current limitation in action	
2	Line impedance too high (DC-link voltage unstable)	
3	Power limiter in action	
4	Output stage temperature high	
5	Motor temperature high	
6	Temperature inside electronics high	
7	DC-link voltage low	
8	Braking mode: set in case of external drive in opposite direction at high speed for lengthy period	Yes
9	Calibration of rotor position sensor in progress	
10	Actual speed is lower than run monitoring speed limit	Yes
11	Open circuit at analog input or PWM input for the set value	Yes
13	DC-link voltage high	
15	Line voltage high	
16	Shake-loose function activated	

8.1.2 Status codes

Manual reset by "Switch off line voltage – wait briefly – switch line voltage back on" or, if provided, via the "Fan enable/disable" input

Number of pulses	Motor status – LED red	Possible cause	Possible remedy
1	Phase failure or line undervoltage	Missing phase Poor power supply quality	Check line voltage
3	Output stage overheating	Electronics housing contaminated	Provide better cooling. Manual reset required
4	Communication error between master controller and slave controller	External supply applied via Vout for setting parameters. Internal error	Switch off line voltage - wait - switch back on
6	Motor overheating	Ambient temperature too high Impermissible operating point	Reduce ambient temperature Correct operating point. Manual reset required
7	Hall sensor error	Internal error	Switch off line voltage - wait - switch back on
8	Motor blocked	Mechanical blockage	Switch off - check safe isolation from supply - check freedom of movement of rotor
9	Speed limit exceeded	-	-
11	Rotor position sensor calibration error	Observe ebm-papst replacement instructions	Rotor position sensor calibration necessary. Notify ebm-papst
13	DC-link undervoltage	Line voltage not OK	Check the line voltage applied.

8.2 Cleaning

To ensure a long service life, check the fans regularly for proper operation and soiling. The frequency of checking is to be adapted accordingly depending on the degree of soiling.

DANGER
Risk of injury from rotating fan.
➔ Only clean when not in motion. Do not disconnect the fan from the power supply, just switch it off via the control input. This will prevent start-up of the fan.

⇨ Dirt deposits on the motor housing can cause overheating of the motor.
⇨ Soiling of the impeller can cause vibration that will shorten the service life of the fan.
⇨ Severe vibration can destroy the fan.
⇨ In such cases, switch off the fan immediately and clean it.
⇨ The preferred method of cleaning is dry cleaning, e.g. using compressed air.
⇨ Do not use aggressive cleaning agents!

NOTE
Damage to the device during cleaning.
Malfunction possible
➔ Do not clean the device using a high-pressure cleaner.
➔ Do not use acid, alkali or solvent-based cleaning agents.
➔ Do not use any pointed or sharp-edged objects for cleaning.

⇨ Completely remove any cleaning agents used.
⇨ If severe corrosion is visible on load-bearing or rotating parts, switch off the device immediately and replace it.
⇨ Repair of load-bearing or rotating parts is not permitted!
⇨ Operate the fan for 2 hours at maximum speed so that any water that has ingressed can evaporate.
⇨ If cleaning does not eliminate vibrations, the fan may need to be rebalanced. To have it rebalanced, contact ebm-papst.
⇨ The fan is equipped with maintenance-free ball bearings. The lifetime lubrication of the ball bearings is designed for a service life of 40,000 hours at full load.
⇨ If bearing replacement is necessary after that period, contact ebm-papst.
⇨ Adapt the maintenance intervals to the actual level of dust exposure.

8.3 Safety inspection

NOTE
High-voltage test
The integrated EMC filter contains Y capacitors. Therefore, the trigger current is exceeded when AC testing voltage is applied.
➔ Test the device with DC voltage when you carry out the high-voltage test required by law. The voltage to be used corresponds to the peak value of the AC voltage required by the standard.

What to check	How to test	Frequency	What action
Contact protection cover for intactness or damage	Visual inspection	At least every 6 months	Repair or replacement of device
Device for damage to blades and housing	Visual inspection	At least every 6 months	Replacement of device
Fastening the cables	Visual inspection	At least every 6 months	Fasten
Insulation of cables for damage	Visual inspection	At least every 6 months	Replace cables
Impeller for wear/deposits/ corrosion and damage	Visual inspection	At least every 6 months	Clean impeller or replace device
Tightness of cable gland	Visual inspection	At least every 6 months	Retighten, replace if damaged
Condensation drainage holes for clogging, where necessary	Visual inspection	At least every 6 months	Open holes
Abnormal bearing noise	Acoustic	At least every 6 months	Replace device
Vibration test	Vibration tester, start-up or deceleration measurement	Recommended every 6 months	Clean impeller or replace device

8.4 Disposal

For ebm-papst, environmental protection and resource preservation are top priority corporate goals. ebm-papst operates an environmental management system which is certified in accordance with ISO 14001 and rigorously implemented around the world on the basis of German standards. Right from the development stage, ecological design, technical safety and health protection are fixed criteria. The following section contains recommendations for ecological disposal of the product and its components.

ebm-papst Inc. · 100 Hyde Road Farmington CT 06034 · 860-674-1515 · sales@us.ebmpapst.com · www.ebmpapst.us

8.4.1 Country-specific legal requirements
NOTE

Country-specific legal requirements
Always observe the applicable country-specific legal regulations with regard to the disposal of products or waste occurring in the various phases of the life cycle. The corresponding disposal standards are also to be heeded.

8.4.2 Disassembly
Disassembly of the product must be performed or supervised by qualified personnel with the appropriate technical knowledge. The product is to be disassembled into suitable components for disposal employing standard procedures for motors.

WARNING
Heavy parts of the product may drop off. Some of the product components are heavy. These components could drop off during disassembly.
This can result in fatal or serious injury and material damage.
- Secure components before unfastening to stop them falling.

8.4.3 Component disposal
The products are mostly made of steel, copper, aluminum and plastic. Metallic materials are generally considered to be fully recyclable. Separate the components for recycling into the following categories:
- Steel and iron
- Aluminum
- Non-ferrous metal, e.g. motor windings
- Plastics, particularly with brominated flame retardants, in accordance with marking
- Insulating materials
- Cables and wires
- Electronic scrap, e.g. circuit boards

Only ferrite magnets and not rare earth magnets are used in external rotor motors from ebm-papst Mulfingen GmbH & Co. KG.
- Ferrite magnets can be disposed of in the same way as normal iron and steel.

Electrical insulating materials on the product, in cables and wires are made of similar materials and are therefore to be treated in the same manner.
The materials concerned are as follows:
- Miscellaneous insulators used in the terminal box
- Power cables
- Cables for internal wiring
- Electrolytic capacitors

Dispose of electronic components employing the proper procedures for electronic scrap.

➔ Please contact ebm-papst for any other questions on disposal.

ebm-papst Inc. · 100 Hyde Road Farmington CT 06034 · 860-674-1515 · sales@us.ebmpapst.com · www.ebmpapst.us