Overview

This datasheet covers the electrical AC and DC specifications for Radiation-Tolerant (RT) PolarFire® FPGA devices (part number prefix RTPF500). AC and DC electrical characteristics and parametric values, unless otherwise noted, apply across the Military (M) temperature grade. In addition, Low-Power (L) devices are equivalent in performance to standard speed grade devices where offered. Users are expected to close timing using SmartTime for the speed grade of the device selected.

Table 1. RT PolarFire Minimum and Maximum Junction Temperatures by Temperature Grade

Temperature Grade	Minimum Junction Temperature	Maximum Junction Temperature
Military (M)	–55 °C	125 °C

Table 2. RT PolarFire Speed Grade Options by Temperature Grade

Temperature Grade	Standard Speed Grade	–1 Speed Grade
Military (M)	Available	Available

RT PolarFire FPGA device programming functions (programming, verify, and digest check) are only allowed over junction temperature ranging from –40 °C to 100 °C. Retention characteristics for each temperature range explicitly describe the retention characteristics for that temperature-grade device. Retention characteristics for RT PolarFire FPGAs at the maximum junction temperature of 125 °C can be profiled using the RT PolarFire Retention Calculator, which can be obtained by contacting technical support at www.microchip.com/support.

© 2024 Microchip Technology Inc. and its subsidiaries

Table of Contents

Overview 1

1. References 3

2. Silicon and Libero Tool Status 4

3. DC Characteristics 5
   - 3.1. Absolute Maximum Rating 5
   - 3.2. Recommended Operating Conditions 6
   - 3.3. Input and Output 14

4. AC Switching Characteristics 23
   - 4.1. I/O Standards Specifications 23
   - 4.2. Clocking Specifications 36
   - 4.3. Fabric Specifications 46
   - 4.4. Transceiver Switching Characteristics 47
   - 4.5. Transceiver Protocol Characteristics 59
   - 4.6. Non-Volatile Characteristics 66
   - 4.7. System Services 72
   - 4.8. Fabric Macros 73
   - 4.9. Power-Up to Functional Timing 76
   - 4.10. Dedicated Pins 81
   - 4.11. User Crypto 84

5. Revision History 88

Microchip Information 89
   - Trademarks 89
   - Legal Notice 89
   - Microchip Devices Code Protection Feature 90

© 2024 Microchip Technology Inc. and its subsidiaries

1. References

The following documents are recommended references. For more information about RT PolarFire static and dynamic power data, see Microchip Power Estimator (MPE) - v2023.1 PolarFire, RT PolarFire and PolarFire SoC.

- Radiation-Tolerant PolarFire FPGA Product Overview
- RT PolarFire Engineering Silicon (ES) FPGAs
- RT PolarFire FPGA Board Design User Guide
- PolarFire Family Fabric User Guide
- RT PolarFire FPGA Programming User Guide
- PolarFire Family Clocking Resources
- UG0687: PolarFire FPGA 1G Ethernet Solutions User Guide
- UG0727: PolarFire FPGA 10G Ethernet Solutions User Guide
- AN4661: PolarFire FPGA Low Power Application Note
- PolarFire Family Memory Controller User Guide
- AN4594: Debugging PolarFire FPGA Using SmartDebug Application Note
- PolarFire Family Power-Up and Resets User Guide
- PolarFire Family PCI Express User Guide
- PolarFire Family FPGA Security User Guide
- PolarFire FPGA and PolarFire SoC FPGA Power Estimator User Guide
- RT PolarFire FPGA User I/O User Guide
- RT PolarFire FPGA Packaging and Pin Descriptions User Guide
- PolarFire Family Transceiver User Guide
- RT PolarFire FPGA Ceramic 1509-Pin Package Pin Assignment Table
- AN3782: RT PolarFire: TMR and Spatial Separation for Higher Reliability Application Note
- AN4903: Differences Between RT PolarFire RTPF500T and RTPF500ZT FPGAs

© 2024 Microchip Technology Inc. and its subsidiaries

2. Silicon and Libero Tool Status

There are three status levels:

- **Advance** – Initial estimated information based on simulations.
- **Preliminary** – Information based on simulation and/or initial characterization.
- **Production** – Final production data.

The following tables list the status of the RT PolarFire FPGA silicon and Libero Timing and Power tool.

Table 2-1. RT PolarFire FPGA Silicon Status

Product	Silicon
RTPF500T RTPF500TL RTPF500TS RTPF500TLS	Production [1]
RTPF500ZT RTPF500ZTL RTPF500ZTS RTPF500ZTLS	Preliminary

1. FPGA Programming Time, FPGA Bitstream Sizes, Digest Time, Zeroization Time, Verify Time, Authentication Time, and System Services are in Advance status and subject to change once characterization is complete.

Table 2-2. RT PolarFire FPGA Tool Status

Device	Status	Minimum Libero Version That Meets the Status Column	
		Timing	Power
		Military	Military
		–STD, –1	–STD, –1
RTPF500T RTPF500TL RTPF500TS RTPF500TLS	Production	2022.1	2022.1
RTPF500ZT RTPF500ZTL RTPF500ZTS RTPF500ZTLS	Preliminary	2024.1	2024.1

© 2024 Microchip Technology Inc. and its subsidiaries

3. DC Characteristics

This section lists the DC characteristics of the RT PolarFire FPGA device.

3.1 Absolute Maximum Rating

The following table lists the absolute maximum ratings for RT PolarFire devices.

Table 3-1. Absolute Maximum Rating[1]

Parameter	Symbol	Min	Max	Unit
FPGA core power supply	V_{DD}	–0.5	1.13	V
Transceiver Tx and Rx lanes supply	V_{DDA}	–0.5	1.13	V
Programming and HSIO receiver supply	V_{DD18}	–0.5	2.0	V
FPGA core and FPGA PLL high-voltage supply	V_{DD25}	–0.5	2.7	V
Transceiver PLL high-voltage supply	V_{DDA25}	–0.5	2.7	V
Transceiver reference clock supply	$V_{DD_XCVR_CLK}$	–0.5	3.6	V
Global V_{REF} for transceiver reference clocks	$XCVR_{VREF}$	–0.5	3.6	V
HSIO DC I/O supply[2]	V_{DDIx}	–0.5	2.0	V
GPIO DC I/O supply[2]	V_{DDIx}	–0.5	3.6	V
Dedicated I/O DC supply for JTAG and SPI	V_{DDI3}	–0.5	3.6	V
GPIO auxiliary power supply for I/O bank x[2]	V_{DDAUXx}	–0.5	3.6	V
Maximum DC input voltage on GPIO	V_{IN}	–0.5	3.8	V
Maximum DC input voltage on HSIO	V_{IN}	–0.5	2.2	V
Transceiver receiver absolute input voltage	Transceiver V_{IN}	–0.5	1.26	V
Transceiver reference clock absolute input voltage	Transceiver REFCLK V_{IN}	–0.5	3.6	V
Storage temperature (ambient)[3]	T_{STG}	–65	150	°C
Junction temperature[3]	T_J	–55	135	°C
Maximum soldering temperature RoHS	$T_{SOLROHS}$	—	260	°C

1. Absolute maximum ratings are stress ratings only; functional operation of the device at these or any other conditions beyond those listed under the recommended operating conditions specified in Table 3-2 is not implied. Stresses beyond those listed in the following table might cause permanent damage to the device. Exposure to absolute maximum rating conditions for extended periods may affect device reliability.

© 2024 Microchip Technology Inc. and its subsidiaries

2. The power supplies for a given I/O bank x are shown as V_{DDIx} and V_{DDAUXx}.
3. See Table 4-63 for retention time vs. temperature. The total time used in calculating the device retention includes the device operating temperature time and temperature during storage time.

3.2 Recommended Operating Conditions

The following table lists the recommended operating conditions.

Table 3-2. Recommended Operating Conditions[10]

Parameter	Symbol	Min	Typ	Max	Unit	Condition
FPGA core supply at 1.0V mode[1, 6]	V_{DD}	0.97	1.00	1.03	V	—
FPGA core supply at 1.05V mode[1, 6]	V_{DD}	1.02	1.05	1.08	V	—
Transceiver Tx and Rx lanes supply (1.0V mode)[6, 7] RTPF500T only	V_{DDA}	0.97	1.00	1.03	V	RTPF500T only: When all lane rates are 10.3125 Gbps or less.[1] RTPF500ZT: Not supported.
Transceiver Tx and Rx lanes supply (1.05V mode)[6]	V_{DDA}	1.02	1.05	1.08	V	RTPF500T only: Must when any lane rate is greater than 10.3125 Gbps. Lane rates 10.3125 Gbps or less may also be powered in 1.05V mode.[1] RTPF500ZT: For all lane rates.
Programming and HSIO receiver supply[6]	V_{DD18}	1.71	1.80	1.89	V	—
FPGA core and FPGA PLL high-voltage supply[6]	V_{DD25}	2.425	2.50	2.575	V	—
Transceiver PLL high-voltage supply[6]	V_{DDA25}	2.425	2.50	2.575	V	—
Transceiver reference clock supply[6, 7, 8, 9]	$V_{DD_XCVR_CLK}$	3.135	3.3	3.4	V	3.3V nominal
		2.375	2.5	2.575	V	2.5V nominal
Global V_{REF} for transceiver reference clocks[3]	$XCVR_{VREF}$	Ground	—	$V_{DD_XCVR_CLK}$	V	—
HSIO DC I/O supply[6]	V_{DDIx}	1.14	Various	1.89	V	Allowed nominal options: 1.2V, 1.35V, 1.5V, and 1.8V[4, 5]

© 2024 Microchip Technology Inc. and its subsidiaries

.....continued

Parameter	Symbol	Min	Typ	Max	Unit	Condition
GPIO DC I/O supply[6, 8, 9]	V_{DDIx}	1.14	Various	3.4	V	Allowed nominal options: 1.2V, 1.5V, 1.8V, 2.5V, and 3.3V[2, 4, 5]
Dedicated I/O DC supply for JTAG and SPI (GPIO Bank 3)[6, 8, 9]	V_{DDI3}	1.71	Various	3.4	V	Allowed nominal options: 1.8V, 2.5V, and 3.3V
GPIO auxiliary supply[6, 8, 9]	V_{DDAUXx}	3.135	3.3	3.4	V	For I/O bank x with V_{DDIx} = 3.3V nominal[2, 4, 5]
		2.375	2.5	2.575	V	For I/O bank x with V_{DDIx} = 2.5V nominal or lower[2, 4, 5]
Military temperature range	T_J	–55	—	125	°C	—
Programming temperature range	T_{PRG}	–40	—	100	°C	—

1. V_{DD} and V_{DDA} can independently operate at 1.0V or 1.05V nominal. These supplies are not dynamically adjustable.
2. For GPIO buffers where I/O bank is designated as bank number, if V_{DDIx} is 2.5V nominal or 3.3V nominal, V_{DDAUXx} must be connected to the V_{DDIx} supply for that bank. If V_{DDIx} for a given GPIO bank is <2.5V nominal, V_{DDAUXx} per I/O bank must be powered at 2.5V nominal.
3. $XCVR_{VREF}$ globally sets the reference voltage of the transceiver's single-ended reference clock input buffers. It is typically near $V_{DD_XCVR_CLK}/2$ but is allowed in the specified range.
4. The power supplies for a given I/O bank x are shown as V_{DDIx} and V_{DDAUXx}.
5. At power-up and power-down, the V_{DDIx} and V_{DDAUXx} supply sequencing can cause signal glitches. Refer to RT PolarFire FPGA User I/O User Guide and RT PolarFire FPGA Board Design User Guide for detailed explanation and recommended steps.
6. The recommended power supply tolerances include DC offset of the supply plus any power supply ripple over the customer design frequencies of interest, as measured at the device package pins. An example for a valid power supply that meets the recommendations for the VDD supply is 1.0V ±10 mV or 1.05V ±10 mV for DC offset with an additional power supply ripple of ±20 mV for a total of 1.0V ±30 mV or 1.05V ±30 mV.
7. Both V_{DDA} and $V_{DD_XCVR_CLK}$ supplies must be powered when any of the transceivers are used. $V_{DD_XCVR_CLK}$ must power on within the I/O calibration time (as specified for the device in Libero). V_{DDA} and $V_{DD_XCVR_CLK}$ must both then remain powered during operation. If V_{DDA} needs to be powered down, $V_{DD_XCVR_CLK}$ must also be powered down. There is no required sequence for powering up or down V_{DDA} and $V_{DD_XCVR_CLK}$.
8. Refer to Table 3-3.
9. Users must be familiar with single event latch-up risks in GPIO banks before selecting 2.5V or 3.3V I/Os. See the RT PolarFire Heavy Ion SEL Report.
10. This product is designed and validated for operation within the junction temperature (Tj) range specified in the Recommended Operating Conditions in this datasheet. Device functionality and performance outside this recommended Operating range are not supported. Customers should

© 2024 Microchip Technology Inc. and its subsidiaries

account for the temperature difference between ambient (Ta) and junction (Tj) in their thermal environment and specific use case, which may result in a different and typically narrower ambient (Ta) operating temperature range.

The following lists the allowable VDDI and VDDAUX combinations. User must be familiar with single event latch-up risks in GPIO banks before selecting 2.5V or 3.3V I/Os. See the PolarFire Heavy Ion SEL Report.

Table 3-3. Allowable V_{DDI} and V_{DDAUX} Combinations for Transceiver Reference Clock, GPIO, SPI, and JTAG Banks

Parameter	VDDIx			VDDAUXx			Unit
	Min	Typ	Max	Min	Typ	Max	
3.3V GPIO signaling	3.135	3.30	3.4	3.135	3.30	3.4	V
2.5V GPIO signaling	2.375	2.50	2.575	2.375	2.50	2.575	V
1.8V GPIO signaling	1.710	1.80	1.890	2.375	2.50	2.575	V

3.2.1 DC Characteristics over Recommended Operating Conditions

The following table lists the DC characteristics over recommended operating conditions.

Table 3-4. DC Characteristics over Recommended Operating Conditions

Parameter	Symbol	Min	Max	Unit	Condition
Input pin capacitance[1]	C_{IN} (GPIO) Dedicated input pins	—	5.6	pf	—
	C_{IN} (HSIO)	—	2.8	pf	—
Input or output leakage current per pin	I_L (GPIO)	—	10	µA	I/O disabled, high—Z
	I_L (HSIO)	—	10	µA	I/O disabled, high—Z
Pad pull-up when V_{IN} = 0	I_{PU}[2]	137	220	µA	V_{DDIx} = 3.3V
Pad pull-up when V_{IN} = 0		102	166	µA	V_{DDIx} = 2.5V
Pad pull-up when V_{IN} = 0		68	115	µA	V_{DDIx} = 1.8V
Pad pull-up when V_{IN} = 0		51	88	µA	V_{DDIx} = 1.5V
Pad pull-up when V_{IN} = 0		29	73	µA	V_{DDIx} = 1.35V
Pad pull-up when V_{IN} = 0		16	46	µA	V_{DDIx} = 1.2V
Pad pull-down when V_{IN} = 3.3V (GPIO only)	I_{PD}[3]	65	187	µA	V_{DDIx} = 3.3V
Pad pull-down when V_{IN} = 2.5V (GPIO only)		63	160	µA	V_{DDIx} = 2.5V
Pad pull-down when V_{IN} = 1.8V		60	117	µA	V_{DDIx} = 1.8V
Pad pull-down when V_{IN} = 1.5V		57	95	µA	V_{DDIx} = 1.5V
Pad pull-down when V_{IN} = 1.35V		52	86	µA	V_{DDIx} = 1.35V
Pad pull-down when V_{IN} = 1.2V		47	79	µA	V_{DDIx} = 1.2V

1. Represents the die input capacitance at the pad (not the package).
2. Weak pull-up resistance (R_{PU}) = V_{DDI}/I_{PU}.
3. Weak pull-down resistance (R_{PD}) = V_{IN}/I_{PD}.

© 2024 Microchip Technology Inc. and its subsidiaries

Table 3-5. Minimum and Maximum Rise and Fall Times

Parameter	Symbol	Min	Max	Unit	Maximum Frequency	Condition
Input rise time[1,4] Input fall time[1,4]	T_{RISE} T_{FALL}	200 ps[2,3]	10% signal period	ps	F ≤ 100 KHz	Min (10% signal period, 1 µs)[5]
			12.5% signal period	ps	100 KHz < F ≤ 400 KHz	Min (12.5% signal period, 300 ns)[6]
			20% signal period	ps	400 KHz < F ≤ 50 MHz	Min (20% signal period, 50 ns)[7]
			4	ns	50 MHz < F ≤ 125 MHz	Not to exceed 4 ns[8]
			50% signal period	ns	125 MHz < F ≤ 800 MHz	Sawtooth waveform[9]

1. Voltage ramp must be monotonic. For single-ended I/O standards, input rise time is specified from 10%–90% of V_{DDIx} and input fall time is specified from 90%–10% of V_{DDIx}. For voltage referenced and differential I/O configurations, ramp times must always comply with I/O standard requirements to ensure compliance.
2. Input slew rates must be controlled to never exceed PAD overshoot/undershoot requirements. Input pad overshoot and undershoot specifications are shown in section Maximum Allowed Overshoot and Undershoot.
3. Rise and fall times in this table are for unterminated inputs. When inputs are terminated, minimum ramp time is not restricted. Recommended minimum ramp time is 25% of bit period, not to exceed a rate of 5 V/ns.
4. Ramp times must not exceed I/O standard requirements to ensure compliance.
5. For signal frequencies <100 KHz, maximum rise time is 1 µs. For example, if signal frequency (F) is 100 KHz, 10% of signal period is 1 µs. The maximum ramp time allowed is the 1 µs limit. However, if signal frequency is 10 KHz, then 10% of signal period is 10 µs which exceeds the maximum limit of 1 µs. The maximum ramp time allowed is therefore 1 µs.
6. For 100 KHz < signal frequencies ≤ 400 KHz, maximum rise time is 300 ns. For example, if signal frequency is 400 KHz, then 12.5% of signal period is 312.5 ns. The maximum ramp time allowed is 300 ns. If the signal frequency is 200 KHz, then 12.5% of signal period is 625 ns. The maximum ramp time allowed is therefore 300 ns.
7. For 400 KHz < signal frequencies ≤ 50 MHz, maximum rise time is 50 ns or 20% of signal period, whichever is less. For example, if signal frequency is 50 MHz, then 20% of signal period is 4 ns. The maximum ramp time allowed is therefore 4 ns, even if the maximum limit is 50 ns. If the signal frequency is 1 MHz, then 20% of signal period is 200 ns. The maximum ramp time allowed is therefore 50 ns.
8. For 50 MHz < signal frequencies ≤ 125 MHz, maximum rise time is 4 ns. For example, if signal frequency is 125 MHz, then the maximum ramp time allowed is 4 ns (sawtooth signal). If the signal frequency is 75 MHz, the maximum ramp time allowed at 75 MHz is still 4 ns.
9. For 125 MHz < signal frequencies ≤ 800 MHz, maximum rise time is 50% of signal frequency (sawtooth signal). For example, if signal frequency is 250 MHz, then the maximum ramp time allowed is 2 ns. If the signal frequency is 800 MHz, the maximum ramp time allowed is 0.625 ns.

3.2.2 Maximum Allowed Overshoot and Undershoot

During transitions, input signals may overshoot and undershoot the voltage listed as follows. Input currents must be limited to less than 100 mA per latch-up specifications.

The maximum overshoot duration is specified as a high-time percentage over the lifetime of the device. A DC signal is equivalent to 100% of the duty cycle.

© 2024 Microchip Technology Inc. and its subsidiaries

The following tables list the maximum AC input voltage (V_{IN}) overshoot duration for HSIO.

Table 3-6. Maximum Overshoot During Transitions for HSIO at T_J = 100 °C

AC (V_{IN}) Overshoot Duration as % at T_J = 100 °C	Condition (V)
100	1.8
100	1.85
100	1.9
100	1.95
100	2
100	2.05
100	2.1
100	2.15
100	2.2
90	2.25
30	2.3
7.5	2.35
1.9	2.4

Note: Overshoot level is for V_{DDI} at 1.8V.

Table 3-7. Maximum Overshoot During Transitions for HSIO at T_J = 125 °C

AC (V_{IN}) Overshoot Duration as % at T_J = 125 °C	Condition (V)
100	1.8
100	1.85
100	1.9
100	1.95
100	2
100	2.05
100	2.1
100	2.15
100	2.2
35	2.25
8	2.3
2	2.35
0.5	2.4

Note: Overshoot level is for V_{DDI} at 1.8V.

The following table lists the maximum AC input voltage (V_{IN}) undershoot duration for HSIO.

Table 3-8. Maximum Undershoot During Transitions for HSIO at T_J = 100 °C

AC (V_{IN}) Undershoot Duration as % at T_J = 100 °C	Condition (V)
100	–0.05
100	–0.1
100	–0.15
100	–0.2

© 2024 Microchip Technology Inc. and its subsidiaries

.....continued	
AC (V_{IN}) Undershoot Duration as % at T_J = 100 °C	Condition (V)
100	–0.25
100	–0.3
100	–0.35
100	–0.4
44	–0.45
14	–0.5
4.8	–0.55
1.6	–0.6

Table 3-9. Maximum Undershoot During Transitions for HSIO at T_J = 125 °C

AC (V_{IN}) Undershoot Duration as % at T_J = 125 °C	Condition (V)
100	–0.05
100	–0.1
100	–0.15
100	–0.2
100	–0.25
100	–0.3
86	–0.35
26	–0.4
8	–0.45
2.6	–0.5
0.8	–0.55
0.3	–0.6

The following table lists the maximum AC input voltage (V_{IN}) overshoot duration for GPIO.

Table 3-10. Maximum Overshoot During Transitions for GPIO at T_J = 100 °C

AC (V_{IN}) Overshoot Duration as % at T_J = 100 °C	Condition (V)
100	3.8
100	3.85
100	3.9
100	3.95
70	4
50	4.05
33	4.1
22	4.15
14	4.2
9.8	4.25
6.5	4.3
4.4	4.35
3	4.4
2	4.45

© 2024 Microchip Technology Inc. and its subsidiaries

.....continued	
AC (V_{IN}) Overshoot Duration as % at T_J = 100 °C	Condition (V)
1.4	4.5
0.9	4.55
0.6	4.6

Note: Overshoot level is for V_{DDI} at 3.3V.

Table 3-11. Maximum Overshoot During Transitions for GPIO at T_J = 125 °C

AC (V_{IN}) Overshoot Duration as % at T_J = 125 °C	Condition (V)
100	3.8
84	3.85
54	3.9
35	3.95
23	4
15	4.05
10	4.1
6.6	4.15
4.4	4.2
2.9	4.25
1.9	4.3
1.3	4.35
0.9	4.4
0.6	4.45
0.4	4.5
0.28	4.55
0.19	4.6

Note: Overshoot level is V_{DDI} at 3.3V.

The following table lists the maximum AC input voltage (V_{IN}) undershoot duration for GPIO.

Table 3-12. Maximum Undershoot During Transitions for GPIO at T_J = 100 °C

AC (V_{IN}) Undershoot Duration as % at T_J = 100 °C	Condition (V)
100	–0.5
100	–0.55
100	–0.6
100	–0.65
100	–0.7
100	–0.75
100	–0.8
100	–0.85
100	–0.9
100	–0.95
100	–1
100	–1.05
100	–1.1

© 2024 Microchip Technology Inc. and its subsidiaries

.....continued	
AC (V_{IN}) Undershoot Duration as % at T_J = 100 °C	Condition (V)
100	–1.15
100	–1.2
69	–1.25
45	–1.3

Table 3-13. Maximum Undershoot During Transitions for GPIO at T_J = 125 °C

AC (V_{IN}) Undershoot Duration as % at T_J = 125 °C	Condition (V)
100	–0.5
100	–0.55
100	–0.6
100	–0.65
100	–0.7
100	–0.75
100	–0.8
100	–0.85
100	–0.9
100	–0.95
100	–1
100	–1.05
78	–1.1
50	–1.15
32	–1.2
20	–1.25
13	–1.3

3.2.2.1 Power Supply Ramp Times

The following table lists the allowable power-up ramp times. Times shown correspond to the ramp of the supply from 0V to the minimum recommended voltage as specified in the section Recommended Operating Conditions. All supplies must rise and fall monotonically.

Table 3-14. Power Supply Ramp Times

Parameter	Symbol	Min	Max	Unit
FPGA core supply	V_{DD}	0.2	50	ms
Transceiver core supply	V_{DDA}	0.2	50	ms
Must connect to 1.8V supply	V_{DD18}	0.2	50	ms
Must connect to 2.5V supply	V_{DD25}	0.2	50	ms
Must connect to 2.5V supply	V_{DDA25}	0.2	50	ms
HSIO bank I/O power supplies	$V_{DDI[0,1,6,7]}$	0.2	50	ms
GPIO bank I/O power supplies	$V_{DDI[2,4,5]}$	0.2	50	ms
Bank 3 dedicated I/O buffers (GPIO)	V_{DDI3}	0.2	50	ms
GPIO bank auxiliary power supplies	$V_{DDAUX[2,4,5]}$	0.2	50	ms
Transceiver reference clock supply	$V_{DD_XCVR_CLK}$	0.2	50	ms
Global V_{REF} for transceiver reference clocks	$XCVR_{VREF}$	0.2	50	ms

© 2024 Microchip Technology Inc. and its subsidiaries

Note: For proper operation of programming recovery mode, if a V_{DD} supply brown-out occurs during programming, a minimum supply ramp down time for only the V_{DD} supply is recommended to be 10 ms or longer by using a programmable regulator or on-board capacitors.

3.2.2.2 Hot Socketing

The following table lists the hot socketing DC characteristics over recommended operating conditions.

Table 3-15. Hot Socketing DC Characteristics over Recommended Operating Conditions

Parameter	Symbol	Min	Typ	Max	Unit	Condition
Current per transceiver Rx input pin (P or N single-ended)[1, 2]	I_{XCVRRX_HS}	—	—	±4	mA	V_{DDA} = 0V
Current per transceiver Tx output pin (P or N single-ended)[3]	I_{XCVRTX_HS}	—	—	±10	mA	V_{DDA} = 0V
Current per transceiver reference clock input pin (P or N single-ended)[4]	$I_{XCVRREF_HS}$	—	—	±1	mA	$V_{DD_XCVR_CLK}$ = 0V
Current per GPIO pin (P or N single-ended)[5]	I_{GPIO_HS}	—	—	±1	mA	V_{DDIx} = 0V
Current per HSIO pin (P or N single-ended)	—	—	—	—	—	Hot socketing is not supported in HSIO.

1. Assumes device is powered-down, all supplies are grounded, AC-coupled interface, and input pin pairs are driven by a CML driver at the maximum amplitude (1V pk–pk) that is toggling at any rate with PRBS7 data.
2. Each P and N transceiver input has less than the specified maximum input current.
3. Each P and N transceiver output is connected to a 40Ω resistor (50Ω CML termination—20% tolerance) to the maximum allowed output voltage (V_{DDAmax} + 0.3V = 1.4V) through an AC-coupling capacitor with all RT PolarFire device supplies grounded. This shows the current for a worst-case DC-coupled interface. As an AC-coupled interface, the output signal will settle at ground and no hot socket current will be seen.
4. $V_{DD_XCVR_CLK}$ is powered down and the device is driven to $-0.3V < V_{IN} < V_{DD_XCVR_CLK}$.
5. V_{DDIx} is powered down and the device is driven to $-0.3V < V_{IN}$ < GPIO V_{DDImax}.

Note: The following dedicated pins do not support hot socketing: TMS, TDI, TRSTB, and DEVRST_N. Weak pull-up (as specified in GPIO) is always enabled.

3.3 Input and Output

The following section describes DC I/O levels, differential and complementary differential DC I/O levels, HSIO and GPIO on-die termination specifications, and LVDS specifications.

3.3.1 DC Input and Output Levels

The following tables list the DC I/O levels.

Table 3-16. DC Input Levels[3]

I/O Standard	V_{DDI} Min (V)	V_{DDI} Typ (V)	V_{DDI} Max (V)	V_{IL} Min (V)	V_{IL} Max (V)	V_{IH} Min (V)	V_{IH} [1] Max (V)
PCI	3.15	3.3	3.45	–0.3	0.3 × V_{DDI}	0.5 × V_{DDI}	3.45
LVTTL	3.15	3.3	3.45	–0.3	0.8	2	3.45
LVCMOS33	3.15	3.3	3.45	–0.3	0.8	2	3.45
LVCMOS25	2.375	2.5	2.625	–0.3	0.7	1.7	2.625
LVCMOS18	1.71	1.8	1.89	–0.3	0.35 × V_{DDI}	0.65 × V_{DDI}	1.89

© 2024 Microchip Technology Inc. and its subsidiaries

.....continued							
I/O Standard	V_{DDI} Min (V)	V_{DDI} Typ (V)	V_{DDI} Max (V)	V_{IL} Min (V)	V_{IL} Max (V)	V_{IH} Min (V)	V_{IH} [1] Max (V)
LVCMOS15	1.425	1.5	1.575	–0.3	0.35 × V_{DDI}	0.65 × V_{DDI}	1.575
LVCMOS12	1.14	1.2	1.26	–0.3	0.35 × V_{DDI}	0.65 × V_{DDI}	1.26
SSTL25I[2]	2.375	2.5	2.625	–0.3	V_{REF} – 0.15	V_{REF} + 0.15	2.625
SSTL25II[2]	2.375	2.5	2.625	–0.3	V_{REF} – 0.15	V_{REF} + 0.15	2.625
SSTL18I[2]	1.71	1.8	1.89	–0.3	V_{REF} – 0.125	V_{REF} + 0.125	1.89
SSTL18II[2]	1.71	1.8	1.89	–0.3	V_{REF} – 0.125	V_{REF} + 0.125	1.89
SSTL15I	1.425	1.5	1.575	–0.3	V_{REF} – 0.1	V_{REF} + 0.1	1.575
SSTL15II	1.425	1.5	1.575	–0.3	V_{REF} – 0.1	V_{REF} + 0.1	1.575
SSTL135I	1.283	1.35	1.418	–0.3	V_{REF} – 0.09	V_{REF} + 0.09	1.418
SSTL135II	1.283	1.35	1.418	–0.3	V_{REF} – 0.09	V_{REF} + 0.09	1.418
HSTL15I	1.425	1.5	1.575	–0.3	V_{REF} – 0.1	V_{REF} + 0.1	1.575
HSTL15II	1.425	1.5	1.575	–0.3	V_{REF} – 0.1	V_{REF} + 0.1	1.575
HSTL135I	1.283	1.35	1.418	–0.3	V_{REF} – 0.09	V_{REF} + 0.09	1.418
HSTL135II	1.283	1.35	1.418	–0.3	V_{REF} – 0.09	V_{REF} + 0.09	1.418
HSTL12I	1.14	1.2	1.26	–0.3	V_{REF} – 0.1	V_{REF} + 0.1	1.26
HSTL12II	1.14	1.2	1.26	–0.3	V_{REF} – 0.1	V_{REF} + 0.1	1.26
HSUL18I	1.71	1.8	1.89	–0.3	0.3 × V_{DDI}	0.7 × V_{DDI}	1.89
HSUL18II	1.71	1.8	1.89	–0.3	0.3 × V_{DDI}	0.7 × V_{DDI}	1.89
HSUL12I	1.14	1.2	1.26	–0.3	V_{REF} – 0.1	V_{REF} + 0.1	1.26
POD12I	1.14	1.2	1.26	–0.3	V_{REF} – 0.08	V_{REF} + 0.08	1.26
POD12II	1.14	1.2	1.26	–0.3	V_{REF} – 0.08	V_{REF} + 0.08	1.26

1. GPIO V_{IH} max is 3.45V with PCI clamp diode turned off regardless of mode, that is, over-voltage tolerant.
2. For external stub-series resistance. This resistance is on-die for GPIO.
3. RT PolarFire FPGA inputs are designed to support mixing assignment for certain I/O standards, allowing I/O using compatible standards to be placed in the same I/O bank. Refer to the description of the mixed I/O receiver capability in RT PolarFire FPGA User I/O User Guide.

Note: 3.3V and 2.5V are only supported in GPIO banks.

Table 3-17. DC Output Levels

I/O Standard	V_{DDI} Min (V)	V_{DDI} Typ (V)	V_{DDI} Max (V)	V_{OL} Max (V)	V_{OH} Min (V)	I_{OL}[2, 6] mA	I_{OH}[2, 6] mA
PCI[1]	3.15	3.3	3.45	0.1 × V_{DDI}	0.9 × V_{DDI}	1.5	0.5
LVTTL	3.15	3.3	3.45	0.4	2.4	Refer to Note 2	
LVCMOS33	3.15	3.3	3.45	0.4	V_{DDI} – 0.4		
LVCMOS25	2.375	2.5	2.625	0.4	V_{DDI} – 0.4		
LVCMOS18	1.71	1.8	1.89	0.45	V_{DDI} – 0.45		
LVCMOS15	1.425	1.5	1.575	0.25 × V_{DDI}	0.75 × V_{DDI}		
LVCMOS12	1.14	1.2	1.26	0.25 × V_{DDI}	0.75 × V_{DDI}		

© 2024 Microchip Technology Inc. and its subsidiaries

.....continued

I/O Standard	V_{DDI} Min (V)	V_{DDI} Typ (V)	V_{DDI} Max (V)	V_{OL} Max (V)	V_{OH} Min (V)	I_{OL} [2, 6] mA	I_{OH} [2, 6] mA
SSTL25I[3]	2.375	2.5	2.625	V_{TT} – 0.608	V_{TT} + 0.608	8.1	8.1
SSTL25II[3]	2.375	2.5	2.625	V_{TT} – 0.810	V_{TT} + 0.810	16.2	16.2
SSTL18I[3]	1.71	1.8	1.89	V_{TT} – 0.603	V_{TT} + 0.603	6.7	6.7
SSTL18II[3]	1.71	1.8	1.89	V_{TT} – 0.603	V_{TT} + 0.603	13.4	13.4
SSTL15I[4]	1.425	1.5	1.575	0.2 × V_{DDI}	0.8 × V_{DDI}	V_{OL}/40	(V_{DDI} – V_{OH})/40
SSTL15II[4]	1.425	1.5	1.575	0.2 × V_{DDI}	0.8 × V_{DDI}	V_{OL}/34	(V_{DDI} – V_{OH})/34
SSTL135I[4]	1.283	1.35	1.418	0.2 × V_{DDI}	0.8 × V_{DDI}	V_{OL}/40	(V_{DDI} – V_{OH})/40
SSTL135II[4]	1.283	1.35	1.418	0.2 × V_{DDI}	0.8 × V_{DDI}	V_{OL}/34	(V_{DDI} – V_{OH})/34
HSTL15I	1.425	1.5	1.575	0.4	V_{DDI} – 0.4	8	8
HSTL15II	1.425	1.5	1.575	0.4	V_{DDI} – 0.4	16	16
HSTL135I[4]	1.283	1.35	1.418	0.2 × V_{DDI}	0.8 × V_{DDI}	V_{OL}/50	(V_{DDI} – V_{OH})/50
HSTL135II[4]	1.283	1.35	1.418	0.2 × V_{DDI}	0.8 × V_{DDI}	V_{OL}/25	(V_{DDI} – V_{OH})/25
HSTL12I[4]	1.14	1.2	1.26	0.1 × V_{DDI}	0.9 × V_{DDI}	V_{OL}/50	(V_{DDI} – V_{OH})/50
HSTL12II[4]	1.14	1.2	1.26	0.1 × V_{DDI}	0.9 × V_{DDI}	V_{OL}/25	(V_{DDI} – V_{OH})/25
HSUL18I[4]	1.71	1.8	1.89	0.1 × V_{DDI}	0.9 × V_{DDI}	V_{OL}/55	(V_{DDI} – V_{OH})/55
HSUL18II[4]	1.71	1.8	1.89	0.1 × V_{DDI}	0.9 × V_{DDI}	V_{OL}/25	(V_{DDI} – V_{OH})/25
HSUL12I[4]	1.14	1.2	1.26	0.1 × V_{DDI}	0.9 × V_{DDI}	V_{OL}/40	(V_{DDI} – V_{OH})/40
POD12I[4, 5]	1.14	1.2	1.26	0.5 × V_{DDI}	—	V_{OL}/48	(V_{DDI} – V_{OH})/48
POD12II[4, 5]	1.14	1.2	1.26	0.5 × V_{DDI}	—	V_{OL}/34	(V_{DDI} – V_{OH})/34

1. Drive strengths per PCI specification V/I curves.
2. Refer to RT PolarFire FPGA User I/O User Guide for details on supported drive strengths.
3. For external stub-series resistance. This resistance is on-die for GPIO.
4. I_{OL}/I_{OH} units for impedance standards in amps (not mA).
5. V_{OH_MAX} based on external pull-up termination (pseudo-open drain).
6. The total DC sink/source current of all I/Os within a lane is limited as follows:
   a. HSIO lane: 120 mA per 12 I/O buffers.
   b. GPIO lane: 160 mA per 12 I/O buffers.

Note: 3.3V and 2.5V are only supported in GPIO banks.

3.3.2 Differential DC Input and Output Levels

The following tables list the differential DC I/O levels.

Table 3-18. Differential DC Input Levels

I/O Standard	Bank Type	V_{ICM_RANGE} Libero Setting	V_{ICM} [1,3] Min (V)	V_{ICM} [1,3] Typ (V)	V_{ICM} [1,3] Max (V)	V_{ID} [2] Min (V)	V_{ID} Typ (V)	V_{ID} Max (V)
LVDS33	GPIO	Mid (default)	0.6	1.25	2.35	0.1	0.35	0.6
		Low	0.05	0.4	0.8	0.1	0.35	0.6
LVDS25[7]	GPIO	Mid (default)	0.6	1.25	2.35	0.1	0.35	0.6
		Low	0.05	0.4	0.8	0.1	0.35	0.6

© 2024 Microchip Technology Inc. and its subsidiaries

.....continued

I/O Standard	Bank Type	V_{ICM_RANGE} Libero Setting	V_{ICM} [1,3] Min (V)	V_{ICM} [1,3] Typ (V)	V_{ICM} [1,3] Max (V)	V_{ID} [2] Min (V)	V_{ID} Typ (V)	V_{ID} Max (V)
LVDS18G[4]	GPIO	Mid (default)	0.6	1.25	1.65	0.1	0.35	0.6
		Low	0.05	0.4	0.8	0.1	0.35	0.6
LVDS18 [7]	HSIO	Mid (default)	0.6	1.25	1.65	0.1	0.35	0.6
		Low	0.05	0.4	0.8	0.1	0.35	0.6
LCMDS33	GPIO	Mid (default)	0.6	1.25	2.35	0.1	0.35	0.6
		Low	0.05	0.4	0.8	0.1	0.35	0.6
LCMDS18	HSIO	Mid (default)	0.6	1.25	1.65	0.1	0.35	0.6
		Low	0.05	0.4	0.8	0.1	0.35	0.6
LCMDS25	GPIO	Mid (default)	0.6	1.25	2.35	0.1	0.35	0.6
		Low	0.05	0.4	0.8	0.1	0.35	0.6
RSDS33	GPIO	Mid (default)	0.6	1.25	2.35	0.1	0.2	0.6
		Low	0.05	0.4	0.8	0.1	0.2	0.6
RSDS25	GPIO	Mid (default)	0.6	1.25	2.35	0.1	0.2	0.6
		Low	0.05	0.4	0.8	0.1	0.2	0.6
RSDS18[5]	HSIO	Mid (default)	0.6	1.25	1.65	0.1	0.2	0.6
		Low	0.05	0.4	0.8	0.1	0.2	0.6
MINILVDS33	GPIO	Mid (default)	0.6	1.25	2.35	0.1	0.3	0.6
		Low	0.05	0.4	0.8	0.1	0.3	0.6
MINILVDS25	GPIO	Mid (default)	0.6	1.25	2.35	0.1	0.3	0.6
		Low	0.05	0.4	0.8	0.1	0.3	0.6
MINILVDS18[5]	HSIO	Mid (default)	0.6	1.25	1.65	0.1	0.3	0.6
		Low	0.05	0.4	0.8	0.1	0.3	0.6
SUBLVDS33	GPIO	Mid (default)	0.6	0.9	2.35	0.1	0.15	0.3
		Low	0.05	0.4	0.8	0.1	0.15	0.3
SUBLVDS25	GPIO	Mid (default)	0.6	0.9	2.35	0.1	0.15	0.3
		Low	0.05	0.4	0.8	0.1	0.15	0.3
SUBLVDS18[5]	HSIO	Mid (default)	0.6	0.9	1.65	0.1	0.15	0.3
		Low	0.05	0.4	0.8	0.1	0.15	0.3
PPDS33	GPIO	Mid (default)	0.6	0.8	2.35	0.1	0.2	0.6
		Low	0.05	0.4	0.8	0.1	0.2	0.6
PPDS25	GPIO	Mid (default)	0.6	0.8	2.35	0.1	0.2	0.6
		Low	0.05	0.4	0.8	0.1	0.2	0.6
PPDS18[5]	HSIO	Mid (default)	0.6	0.8	1.65	0.1	0.2	0.6
		Low	0.05	0.4	0.8	0.1	0.2	0.6
SLVS33[6]	GPIO	Mid (default)	0.6	1.25	2.35	0.1	0.2	0.3
		Low	0.05	0.2	0.8	0.1	0.2	0.3
SLVS25[6]	GPIO	Mid (default)	0.6	1.25	2.35	0.1	0.2	0.3
		Low	0.05	0.2	0.8	0.1	0.2	0.3

© 2024 Microchip Technology Inc. and its subsidiaries

.....continued								
I/O Standard	Bank Type	V_{ICM_RANGE} Libero Setting	V_{ICM} [1,3] Min (V)	V_{ICM} [1,3] Typ (V)	V_{ICM} [1,3] Max (V)	V_{ID} [2] Min (V)	V_{ID} Typ (V)	V_{ID} Max (V)
SLVS18[5]	HSIO	Mid (default)	0.6	1.00	1.65	0.1	0.2	0.3
		Low	0.05	0.4	0.8	0.1	0.2	0.3
HCSL33[6]	GPIO	Mid (default)	0.6	1.25	2.35	0.1	0.55	1.1
		Low	0.05	0.35	0.8	0.1	0.55	1.1
HCSL25[6]	GPIO	Mid (default)	0.6	1.25	2.35	0.1	0.55	1.1
		Low	0.05	0.35	0.8	0.1	0.55	1.1
HCSL18[5]	HSIO	Mid (default)	0.6	1.0	1.65	0.1	0.55	1.1
		Low	0.05	0.4	0.8	0.1	0.55	1.1
BUSLVDSE25	GPIO	Mid (default)	0.6	1.25	2.35	0.05	0.1	V_{DDIn}
		Low	0.05	0.4	0.8	0.05	0.1	V_{DDIn}
MLVDSE25	GPIO	Mid (default)	0.6	1.25	2.35	0.05	0.35	2.4
		Low	0.05	0.4	0.8	0.05	0.35	2.4
LVPECL33	GPIO	Mid (default)	0.6	1.65	2.35	0.05	0.8	2.4
		Low	0.05	0.4	0.8	0.05	0.8	2.4
LVPECLE33	GPIO	Mid (default)	0.6	1.65	2.35	0.05	0.8	2.4
		Low	0.05	0.4	0.8	0.05	0.8	2.4
MIPI25	GPIO	Mid (default)	0.6	1.25	2.35	0.05	0.2	0.3
		Low	0.05	0.2	0.8	0.05	0.2	0.3

1. V_{ICM} is the input Common mode.
2. V_{ID} is the input differential voltage.
3. V_{ICM} rules are as follows:
   a. GPIO V_{ICM} must be less than V_{DDI} – 0.4V;
   b. HSIO V_{ICM} must be less than V_{DDI} – 0.24V;
   c. $V_{ICM} + V_{ID}/2$ must be $<V_{DDI} + 0.4V$;
   d. $V_{ICM} – V_{ID}/2$ must be >VSS – 0.3V;
   e. Any differential input with V_{ICM} ≤0.6 V requires the low Common mode setting in Libero (V_{ICM_RANGE} = Low).
4. V_{DDI} = 1.8V, V_{DDAUX} = 2.5V.
5. HSIO receiver only.
6. GPIO receiver only.
7. LVDS25 (GPIO), LVDS18G (GPIO), and LVDS18 (HSIO) configurations should be used in conjunction with I/O CDR when implementing SGMII receivers.

Table 3-19. Differential DC Output Levels

I/O Standard	Bank Type	V_{OCM} [1] Min (V)	V_{OCM} Typ (V)	V_{OCM} Max (V)	V_{OD} [2] Min (V)	V_{OD} [2] Typ (V)	V_{OD} [2] Max (V)
LVDS33	GPIO	1.125	1.2	1.375	0.25	0.35	0.45
LVDS25 [4]	GPIO	1.125	1.2	1.375	0.25	0.35	0.45
LVDS18G[4]	GPIO	1.125	1.2	1.375	0.25	0.35	0.45

© 2024 Microchip Technology Inc. and its subsidiaries

.....continued

I/O Standard	Bank Type	V_{OCM} [1] Min (V)	V_{OCM} Typ (V)	V_{OCM} Max (V)	V_{OD} [2] Min (V)	V_{OD} [2] Typ (V)	V_{OD} [2] Max (V)
LCMDS33	GPIO	0.45	0.6	0.7	0.25	0.35	0.45
LCMDS25	GPIO	0.45	0.6	0.7	0.25	0.35	0.45
RSDS33	GPIO	1.125	1.2	1.375	0.17	0.2	0.23
RSDS25	GPIO	1.125	1.2	1.375	0.17	0.2	0.23
MINILVDS33	GPIO	1.125	1.2	2.375	0.3	0.4	0.6
MINILVDS25	GPIO	1.125	1.2	2.375	0.3	0.4	0.6
SUBLVDS33	GPIO	0.8	0.9	1.0	0.1	0.15	0.3
SUBLVDS25	GPIO	0.8	0.9	1.0	0.1	0.15	0.3
PPDS33	GPIO	0.05	0.8	1.4	0.17	0.2	0.23
PPDS25	GPIO	0.05	0.8	1.4	0.17	0.2	0.23
SLVSE15[3]	GPIO, HSIO	0.1	0.2	0.3	0.12	0.135	0.15
BUSLVDSE25[3]	GPIO	1.15	1.25	1.31	0.24	0.262	0.272
MLVDSE25[3]	GPIO	1.15	1.25	1.31	0.396	0.442	0.453
LVPECLE33[3]	GPIO	1.51	1.65	1.74	0.664	0.722	0.755
MIPIE25 [3]	GPIO	0.15	0.2	0.25	0.14	0.2	0.27

1. V_{OCM} is the output Common mode voltage.
2. V_{OD} is the output differential voltage.
3. Emulated output only, using external resistors.
4. LVDS25 and LVDS18G configuration should be used when implementing SGMII transmitters.

3.3.3 Complementary Differential DC Input and Output Levels

The following tables list the complementary differential DC I/O levels.

Table 3-20. Complementary Differential DC Input Levels

I/O Standard	V_{DDI} Min (V)	V_{DDI} Typ (V)	V_{DDI} Max (V)	V_{ICM} [1,3] Min (V)	V_{ICM} [1,3] Typ (V)	V_{ICM} [1,3] Max (V)	V_{ID} [2] Min (V)	V_{ID} [2] Max (V)
SSTL25I	2.375	2.5	2.625	1.164	1.250	1.339	0.1	V_{DDAUX} (GPIO)
SSTL25II	2.375	2.5	2.625	1.164	1.250	1.339	0.1	V_{DDAUX} (GPIO)
SSTL18I	1.71	1.8	1.89	0.838	0.900	0.964	0.1	V_{DDAUX} (GPIO) V_{DDI} (HSIO)
SSTL18II	1.71	1.8	1.89	0.838	0.900	0.964	0.1	V_{DDAUX} (GPIO) V_{DDI} (HSIO)
SSTL15I	1.425	1.5	1.575	0.698	0.750	0.803	0.1	V_{DDAUX} (GPIO) V_{DDI} (HSIO)
SSTL15II	1.425	1.5	1.575	0.698	0.750	0.803	0.1	V_{DDAUX} (GPIO) V_{DDI} (HSIO)
SSTL135I	1.283	1.35	1.418	0.629	0.675	0.723	0.1	V_{DDI} (HSIO)
SSTL135II	1.283	1.35	1.418	0.629	0.675	0.723	0.1	V_{DDI} (HSIO)
HSTL15I	1.425	1.5	1.575	0.698	0.750	0.803	0.1	V_{DDAUX} (GPIO) V_{DDI} (HSIO)
HSTL15II	1.425	1.5	1.575	0.698	0.750	0.803	0.1	V_{DDAUX} (GPIO) V_{DDI} (HSIO)
HSTL135I	1.283	1.35	1.418	0.629	0.675	0.723	0.1	V_{DDI} (HSIO)
HSTL135II	1.283	1.35	1.418	0.629	0.675	0.723	0.1	V_{DDI} (HSIO)

© 2024 Microchip Technology Inc. and its subsidiaries

.....continued								
I/O Standard	V_{DDI} Min (V)	V_{DDI} Typ (V)	V_{DDI} Max (V)	V_{ICM} [1,3] Min (V)	V_{ICM} [1,3] Typ (V)	V_{ICM} [1,3] Max (V)	V_{ID} [2] Min (V)	V_{ID} [2] Max (V)
HSTL12I	1.14	1.2	1.26	0.559	0.600	0.643	0.1	V_{DDI} (HSIO)
HSTL12II	1.14	1.2	1.26	0.559	0.600	0.643	0.1	V_{DDI} (HSIO)
HSUL18I	1.71	1.8	1.89	0.838	0.900	0.964	0.1	V_{DDI} (HSIO)
HSUL18II	1.71	1.8	1.89	0.838	0.900	0.964	0.1	V_{DDI} (HSIO)
HSUL12I	1.14	1.2	1.26	0.559	0.600	0.643	0.1	V_{DDI} (HSIO)
POD12I	1.14	1.2	1.26	0.787	0.840	0.895	0.1	V_{DDI} (HSIO)
POD12II	1.14	1.2	1.26	0.787	0.840	0.895	0.1	V_{DDI} (HSIO)

1. V_{ICM} is the input Common mode voltage.
2. V_{ID} is the input differential voltage.
3. V_{ICM} rules are as follows:
   a. V_{ICM} must be less than V_{DDI} – 0.4V;
   b. $V_{ICM} + V_{ID}/2$ must be $<V_{DDI} + 0.4V$;
   c. $V_{ICM} - V_{ID}/2$ must be >VSS – 0.3V.

Table 3-21. Complementary Differential DC Output Levels

I/O Standard	V_{DDI} Min (V)	V_{DDI} Typ (V)	V_{DDI} Max (V)	V_{OL} Min (V)	V_{OL} Max (V)	V_{OH} [1,3] Min (V)	I_{OL} [2] Min (mA)	I_{OH} [2] Min (mA)
SSTL25I	2.375	2.5	2.625	—	V_{TT} – 0.608	V_{TT} + 0.608	8.1	8.1
SSTL25II	2.375	2.5	2.625	—	V_{TT} – 0.810	V_{TT} + 0.810	16.2	16.2
SSTL18I	1.71	1.8	1.89	—	V_{TT} – 0.603	V_{TT} + 0.603	6.7	6.7
SSTL18II	1.71	1.8	1.89	—	V_{TT} – 0.603	V_{TT} + 0.603	13.4	13.4
SSTL15I[4]	1.425	1.5	1.575	—	0.2 × V_{DDI}	0.8 × V_{DDI}	$V_{OL}/40$	$(V_{DDI} - V_{OH})/40$
SSTL15II[4]	1.425	1.5	1.575	—	0.2 × V_{DDI}	0.8 × V_{DDI}	$V_{OL}/34$	$(V_{DDI} - V_{OH})/34$
SSTL135I[4]	1.283	1.35	1.418	—	0.2 × V_{DDI}	0.8 × V_{DDI}	$V_{OL}/40$	$(V_{DDI} - V_{OH})/40$
SSTL135II[4]	1.283	1.35	1.418	—	0.2 × V_{DDI}	0.8 × V_{DDI}	$V_{OL}/34$	$(V_{DDI} - V_{OH})/34$
HSTL15I	1.425	1.5	1.575	—	0.4	V_{DDI} – 0.4	8	8
HSTL15II	1.425	1.5	1.575	—	0.4	V_{DDI} – 0.4	16	16
HSTL135I[4]	1.283	1.35	1.418	—	0.2 × V_{DDI}	0.8 × V_{DDI}	$V_{OL}/50$	$(V_{DDI} - V_{OH})/50$
HSTL135II[4]	1.283	1.35	1.418	—	0.2 × V_{DDI}	0.8 × V_{DDI}	$V_{OL}/25$	$(V_{DDI} - V_{OH})/25$
HSTL12I[4]	1.14	1.2	1.26	—	0.1 × V_{DDI}	0.9 × V_{DDI}	$V_{OL}/50$	$(V_{DDI} - V_{OH})/50$
HSTL12II[4]	1.14	1.2	1.26	—	0.1 × V_{DDI}	0.9 × V_{DDI}	$V_{OL}/25$	$(V_{DDI} - V_{OH})/25$
HSUL18I[4]	1.71	1.8	1.89	—	0.1 × V_{DDI}	0.9 × V_{DDI}	$V_{OL}/55$	$(V_{DDI} - V_{OH})/55$
HSUL18II[4]	1.71	1.8	1.89	—	0.1 × V_{DDI}	0.9 × V_{DDI}	$V_{OL}/25$	$(V_{DDI} - V_{OH})/25$
HSUL12I[4]	1.14	1.2	1.26	—	0.1 × V_{DDI}	0.9 × V_{DDI}	$V_{OL}/40$	$(V_{DDI} - V_{OH})/40$
POD12I[3,4]	1.14	1.2	1.26	—	0.5 × V_{DDI}	—	$V_{OL}/48$	$(V_{DDI} - V_{OH})/48$
POD12II[3,4]	1.14	1.2	1.26	—	0.5 × V_{DDI}	—	$V_{OL}/34$	$(V_{DDI} - V_{OH})/34$

1. V_{OH} is the single-ended high-output voltage.
2. The total DC sink/source current of all I/Os within a lane is limited as follows:

© 2024 Microchip Technology Inc. and its subsidiaries

a. HSIO lane: 120 mA per 12 I/O buffers.
b. GPIO lane: 160 mA per 12 I/O buffers.

3. V_{OH_MAX} is based on external pull-up termination (pseudo-open drain).
4. I_{OL}/I_{OH} units for impedance standards are in amps (not mA).

3.3.4 HSIO On-Die Termination

The following tables list the on-die termination calibration accuracy specifications for the HSIO bank.

Table 3-22. Single-Ended (Internal Parallel) Thevenin Termination

Min (%)	Typ	Max (%)	Unit	Condition
–40	50	20	Ω	V_{DDI} = 1.8V/1.5V/1.35V/1.2V
–40	75	20	Ω	V_{DDI} = 1.8V
–40	150	20	Ω	V_{DDI} = 1.8V
–20	20	20	Ω	V_{DDI} = 1.5V/1.35V
–20	30	20	Ω	V_{DDI} = 1.5V/1.35V
–20	40	20	Ω	V_{DDI} = 1.5V/1.35V
–20	60	20	Ω	V_{DDI} = 1.5V/1.35V
–20	120	20	Ω	V_{DDI} = 1.5V/1.35V
–20	60	20	Ω	V_{DDI} = 1.2V
–20	120	20	Ω	V_{DDI} = 1.2V

Note: Thevenin impedance is calculated based on independent P and N as measured at 50% of V_{DDI}. For 50Ω/75Ω/150Ω cases, the nearest supported values of 40Ω/60Ω/120Ω are used.

Table 3-23. Single-Ended (Internal Parallel) Termination to V_{DDI}

Min (%)	Typ	Max (%)	Unit	Condition
–20	34	20	Ω	V_{DDI} = 1.2V
–20	40	20	Ω	V_{DDI} = 1.2V
–20	48	20	Ω	V_{DDI} = 1.2V
–20	60	20	Ω	V_{DDI} = 1.2V
–20	80	20	Ω	V_{DDI} = 1.2V
–20	120	20	Ω	V_{DDI} = 1.2V
–20	240	20	Ω	V_{DDI} = 1.2V

Note: Measured at 80% of V_{DDI}.

Table 3-24. Single-Ended (Internal Parallel) Termination to V_{SS}

Min (%)	Typ	Max (%)	Unit	Condition
–20	120	20	Ω	V_{DDI} = 1.8V/1.5V
–20	240	20	Ω	V_{DDI} = 1.8V/1.5V
–20	120	20	Ω	V_{DDI} = 1.2V
–20	240	20	Ω	V_{DDI} = 1.2V

Note: Measured at 50% of V_{DDI}.

© 2024 Microchip Technology Inc. and its subsidiaries

3.3.5 GPIO On-Die Termination

The following table lists the on-die termination calibration accuracy specifications for the GPIO bank.

Table 3-25. On-Die Termination Calibration Accuracy Specifications for GPIO Bank

Parameter	Description	Min (%)	Typ	Max (%)	Unit	Condition
Differential termination[1]	Internal differential termination	–20	100	20	Ω	V_{ICM} < 0.8V[6]
		–20	100	40	Ω	0.6V < V_{ICM} < 1.65V[6]
		–20	100	80	Ω	1.4V < V_{ICM} [6]
Single-ended Thevenin termination[2, 3]	Internal parallel Thevenin termination	–40	50	20	Ω	V_{DDI} = 1.8V/1.5V
		–40	75	20	Ω	V_{DDI} = 1.8V
		–40	150	20	Ω	V_{DDI} = 1.8V
		–20	20	20	Ω	V_{DDI} = 1.5V
		–20	30	20	Ω	V_{DDI} = 1.5V
		–20	40	20	Ω	V_{DDI} = 1.5V
		–20	60	20	Ω	V_{DDI} = 1.5V
		–20	120	20	Ω	V_{DDI} = 1.5V
Single-ended termination to V_{SS}[4, 5]	Internal parallel termination to V_{SS}	–20	120	20	Ω	V_{DDI} = 2.5V/1.8V/1.5V/1.2V
		–20	240	20	Ω	V_{DDI} = 2.5V/1.8V/1.5V/1.2V

1. Measured across P to N with 400 mV bias.
2. Thevenin impedance is calculated based on independent P and N as measured at 50% of V_{DDI}.
3. For 50Ω/75Ω/150Ω cases, the nearest supported values of 40Ω/60Ω/120Ω are used.
4. Measured at 50% of V_{DDI}.
5. Supported terminations vary with the I/O type regardless of V_{DDI} nominal voltage. Refer to Libero for available combinations and default settings.
6. When V_{ICM} complies with more than one range, use the maximum percentage tolerance of the two ranges.

© 2024 Microchip Technology Inc. and its subsidiaries

4. AC Switching Characteristics

This section contains the AC switching characteristics of the RT PolarFire SoC FPGA device.

4.1 I/O Standards Specifications

This section describes I/O delay measurement methodology, buffer speed, switching characteristics, digital latency, gearing training calibration, and maximum physical interface (PHY) rate for memory interface IP. Users must be familiar with single event latch-up risks in GPIO banks before selecting 2.5V or 3.3V I/Os. See the RT PolarFire Heavy Ion SEL Report.

4.1.1 Input Delay Measurement Methodology Maximum PHY Rate for Memory Interface IP

The following table provides information about the methodology for input delay measurement.

Table 4-1. Input Delay Measurement Methodology

Standard	Description	V_L[1]	V_H[1]	V_{ID}[2]	V_{ICM}[2]	V_{MEAS}[3, 4]	V_{REF}[1, 5]	Unit
PCI	PCIE 3.3V	0	V_{DDI}	—	—	$V_{DDI}/2$	—	V
LVTTL	LVTTL 3.3V	0	V_{DDI}	—	—	$V_{DDI}/2$	—	V
LVCMOS33	LVCMOS 3.3V	0	V_{DDI}	—	—	$V_{DDI}/2$	—	V
LVCMOS25	LVCMOS 2.5V	0	V_{DDI}	—	—	$V_{DDI}/2$	—	V
LVCMOS18	LVCMOS 1.8V	0	V_{DDI}	—	—	$V_{DDI}/2$	—	V
LVCMOS15	LVCMOS 1.5V	0	V_{DDI}	—	—	$V_{DDI}/2$	—	V
LVCMOS12	LVCMOS 1.2V	0	V_{DDI}	—	—	$V_{DDI}/2$	—	V
SSTL25I	SSTL 2.5V Class I	V_{REF} – 0.5	V_{REF} + 0.5	—	—	V_{REF}	1.25	V
SSTL25II	SSTL 2.5V Class II	V_{REF} – 0.5	V_{REF} + 0.5	—	—	V_{REF}	1.25	V
SSTL18I	SSTL 1.8V Class I	V_{REF} – 0.5	V_{REF} + 0.5	—	—	V_{REF}	0.90	V
SSTL18II	SSTL 1.8V Class II	V_{REF} – 0.5	V_{REF} + 0.5	—	—	V_{REF}	0.90	V
SSTL15I	SSTL 1.5V Class I	V_{REF} – .175	V_{REF} + .175	—	—	V_{REF}	0.75	V
SSTL15II	SSTL 1.5V Class II	V_{REF} – .175	V_{REF} + .175	—	—	V_{REF}	0.75	V
SSTL135I	SSTL 1.35V Class I	V_{REF} – .16	V_{REF} + .16	—	—	V_{REF}	0.675	V
SSTL135II	SSTL 1.35V Class II	V_{REF} – .16	V_{REF} + .16	—	—	V_{REF}	0.675	V
HSTL15I	HSTL 1.5V Class I	V_{REF} – .5	V_{REF} + .5	—	—	V_{REF}	0.75	V
HSTL15II	HSTL 1.5V Class II	V_{REF} – .5	V_{REF} + .5	—	—	V_{REF}	0.75	V
HSTL135I	HSTL 1.35V Class I	V_{REF} – .45	V_{REF} + .45	—	—	V_{REF}	0.675	V
HSTL135II	HSTL 1.35V Class II	V_{REF} – .45	V_{REF} + .45	—	—	V_{REF}	0.675	V
HSTL12I	HSTL 1.2V Class I	V_{REF} – .4	V_{REF} + .4	—	—	V_{REF}	0.60	V
HSTL12II	HSTL 1.2V Class II	V_{REF} – .4	V_{REF} + .4	—	—	V_{REF}	0.60	V
HSUL18I	HSUL 1.8V Class I	V_{REF} – .54	V_{REF} + .54	—	—	V_{REF}	0.90	V
HSUL18II	HSUL 1.8V Class II	V_{REF} – .54	V_{REF} + 0.54	—	—	V_{REF}	0.90	V
HSUL12I	HSUL 1.2V	V_{REF} – .22	V_{REF} + .22	—	—	V_{REF}	0.60	V
POD12I	Pseudo open drain (POD) logic 1.2V Class I	V_{REF} – .15	V_{REF} + .15	—	—	V_{REF}	0.84	V
POD12II	POD 1.2V Class II	V_{REF} – .15	V_{REF} + .15	—	—	V_{REF}	0.84	V
LVDS33	Low-Voltage Differential Signaling (LVDS) 3.3V	V_{ICM} – .125	V_{ICM} + .125	0.250	1.250	0	—	V
LVDS25	LVDS 2.5V	V_{ICM} – .125	V_{ICM} + .125	0.250	1.250	0	—	V
LVDS18	LVDS 1.8V	V_{ICM} – .125	V_{ICM} + .125	0.250	1.250	0	—	V

© 2024 Microchip Technology Inc. and its subsidiaries

.....continued

Standard	Description	V_L[1]	V_H[1]	V_{ID}[2]	V_{ICM}[2]	V_{MEAS}[3, 4]	V_{REF}[1, 5]	Unit
LCMDS33	Low-Common mode differential signaling (LCMDS) 3.3V	V_{ICM} – .125	V_{ICM} + .125	0.250	1.250	0	—	V
LCMDS25	LCMDS 2.5V	V_{ICM} – .125	V_{ICM} + .125	0.250	1.250	0	—	V
LCMDS18	LCMDS 1.8V	V_{ICM} – .125	V_{ICM} + .125	0.250	1.250	0	—	V
RSDS33	RSDS 3.3V	V_{ICM} – .125	V_{ICM} + .125	0.250	1.250	0	—	V
RSDS25	RSDS 2.5V	V_{ICM} – .125	V_{ICM} + .125	0.250	1.250	0	—	V
RSDS18	RSDS 1.8V	V_{ICM} – .125	V_{ICM} + .125	0.250	1.250	0	—	V
MINILVDS33	Mini-LVDS 3.3V	V_{ICM} – .125	V_{ICM} + .125	0.250	1.250	0	—	V
MINILVDS25	Mini-LVDS 2.5V	V_{ICM} – .125	V_{ICM} + .125	0.250	1.250	0	—	V
MINILVDS18	Mini-LVDS 1.8V	V_{ICM} – .125	V_{ICM} + .125	0.250	1.250	0	—	V
SUBLVDS33	Sub-LVDS 3.3V	V_{ICM} – .125	V_{ICM} + .125	0.250	0.900	0	—	V
SUBLVDS25	Sub-LVDS 2.5V	V_{ICM} – .125	V_{ICM} + .125	0.250	0.900	0	—	V
SUBLVDS18	Sub-LVDS 1.8V	V_{ICM} – .125	V_{ICM} + .125	0.250	0.900	0	—	V
PPDS33	Point-to-point differential signaling 3.3V	V_{ICM} – .125	V_{ICM} + .125	0.250	0.800	0	—	V
PPDS25	PPDS 2.5V	V_{ICM} – .125	V_{ICM} + .125	0.250	0.800	0	—	V
PPDS18	PPDS 1.8V	V_{ICM} – .125	V_{ICM} + .125	0.250	0.800	0	—	V
SLVS33	Scalable low-voltage signaling 3.3V	V_{ICM} – .125	V_{ICM} + .125	0.250	0.200	0	—	V
SLVS25	SLVS 2.5V	V_{ICM} – .125	V_{ICM} + .125	0.250	0.200	0	—	V
SLVS18	SLVS 1.8V	V_{ICM} – .125	V_{ICM} + .125	0.250	0.200	0	—	V
HCSL33	High-speed current steering logic (HCSL) 3.3V	V_{ICM} – .125	V_{ICM} + .125	0.250	0.350	0	—	V
HCSL25	HCSL 2.5V	V_{ICM} – .125	V_{ICM} + .125	0.250	0.350	0	—	V
HCSL18	HCSL 1.8V	V_{ICM} – .125	V_{ICM} + .125	0.250	0.350	0	—	V
BLVDSE25[6]	Bus LVDS 2.5V	V_{ICM} – .125	V_{ICM} + .125	0.250	1.250	0	—	V
MLVDSE25[6]	Multipoint LVDS 2.5V	V_{ICM} – .125	V_{ICM} + .125	0.250	1.250	0	—	V
LVPECL33	Low-voltage positive emitter coupled logic	V_{ICM} – .125	V_{ICM} + .125	0.250	1.650	0	—	V
LVPECLE33[6]	Low-voltage positive emitter coupled logic	V_{ICM} – .125	V_{ICM} + .125	0.250	1.650	0	—	V
SSTL25I	Differential SSTL 2.5V Class I	V_{ICM} – .125	V_{ICM} + .125	0.250	1.250	0	—	V
SSTL25II	Differential SSTL 2.5V Class II	V_{ICM} – .125	V_{ICM} + .125	0.250	1.250	0	—	V
SSTL18I	Differential SSTL 1.8V Class I	V_{ICM} – .125	V_{ICM} + .125	0.250	0.900	0	—	V
SSTL18II	Differential SSTL 1.8V Class II	V_{ICM} – .125	V_{ICM} + .125	0.250	0.900	0	—	V
SSTL15I	Differential SSTL 1.5V Class I	V_{ICM} – .125	V_{ICM} + .125	0.250	0.750	0	—	V
SSTL15II	Differential SSTL 1.5V Class II	V_{ICM} – .125	V_{ICM} + .125	0.250	0.750	0	—	V
SSTL135I	Differential SSTL 1.35V Class I	V_{ICM} – .125	V_{ICM} + .125	0.250	0.675	0	—	V
SSTL135II	Differential SSTL 1.35V Class I	V_{ICM} – .125	V_{ICM} + .125	0.250	0.675	0	—	V
HSTL15I	Differential HSTL 1.5V Class I	V_{ICM} – .125	V_{ICM} + .125	0.250	0.750	0	—	V
HSTL15II	Differential HSTL 1.5V Class II	V_{ICM} – .125	V_{ICM} + .125	0.250	0.750	0	—	V
HSTL135I	Differential HSTL 1.35V Class I	V_{ICM} – .125	V_{ICM} + .125	0.250	0.675	0	—	V
HSTL135II	Differential HSTL 1.35V Class II	V_{ICM} – .125	V_{ICM} + .125	0.250	0.675	0	—	V
HSTL12I	Differential HSTL 1.2V Class I	V_{ICM} – .125	V_{ICM} + .125	0.250	0.600	0	—	V
HSTL12II	Differential HSTL 1.2V Class II	V_{ICM} – .125	V_{ICM} + .125	0.250	0.600	0	—	V

© 2024 Microchip Technology Inc. and its subsidiaries

.....continued

Standard	Description	V_L[1]	V_H[1]	V_{ID}[2]	V_{ICM}[2]	V_{MEAS}[3, 4]	V_{REF}[1, 5]	Unit
HSUL18I	Differential HSUL 1.8V Class I	V_{ICM} – .125	V_{ICM} + .125	0.250	0.900	0	—	V
HSUL18II	Differential HSUL 1.8V Class II	V_{ICM} – .125	V_{ICM} + .125	0.250	0.900	0	—	V
HSUL12I	Differential HSUL 1.2V	V_{ICM} – .125	V_{ICM} + .125	0.250	0.600	0	—	V
POD12I	Differential POD 1.2V Class I	V_{ICM} – .125	V_{ICM} + .125	0.250	0.840	0	—	V
POD12II	Differential POD 1.2V Class II	V_{ICM} – .125	V_{ICM} + .125	0.250	0.840	0	—	V
MIPI25	Mobile Industry Processor Interface	V_{ICM} – .125	V_{ICM} + .125	0.250	0.200	0	—	V

1. Measurements are made at typical, minimum, and maximum V_{REF} values. Reported delays reflect worst-case of these measurements. V_{REF} values listed are typical. Input waveform switches between V_{IL} and V_{IH}. All rise and fall rates must be 1V/ns for non-mixed mode input buffers as one-third the minimum period for mixed-mode input buffers.
2. Differential receiver standards all use 250 mV V_{ID} for timing. V_{ICM} is different between different standards.
3. Input voltage level from which measurement starts.
4. The value given is the differential input voltage.
5. This is an input voltage reference that bears no relation to the V_{REF}/V_{MEAS} parameters found in IBIS models or shown in the Figure 4-1.
6. Emulated bidirectional interface.

4.1.2 Output Delay Measurement Methodology

The following section provides information about the methodology for output delay measurement.

Table 4-2. Output Delay Measurement Methodology

Standard	Description	R_{REF} (Ω)	C_{REF} (pF)	V_{MEAS} (V)	V_{REF} (V)
PCI	PCIE 3.3V	25	10	1.65	—
LVTTL	LVTTL 3.3V	1M	0	1.65	—
LVCMOS33	LVCMOS 3.3V	1M	0	1.65	—
LVCMOS25	LVCMOS 2.5V	1M	0	1.25	—
LVCMOS18	LVCMOS 1.8V	1M	0	0.90	—
LVCMOS15	LVCMOS 1.5V	1M	0	0.75	—
LVCMOS12	LVCMOS 1.2V	1M	0	0.60	—
SSTL25I	Stub-series terminated logic 2.5V Class I	50	0	V_{REF}	1.25
SSTL25II	SSTL 2.5V Class II	50	0	V_{REF}	1.25
SSTL18I	SSTL 1.8V Class I	50	0	V_{REF}	0.9
SSTL18II	SSTL 1.8V Class II	50	0	V_{REF}	0.9
SSTL15I	SSTL 1.5V Class I	50	0	V_{REF}	0.75
SSTL15II	SSTL 1.5V Class II	50	0	V_{REF}	0.75
SSTL135I	SSTL 1.35V Class I	50	0	V_{REF}	0.675
SSTL135II	SSTL 1.35V Class II	50	0	V_{REF}	0.675
HSTL15I	High-Speed Transceiver Logic (HSTL) 1.5V Class I	50	0	V_{REF}	0.75
HSTL15II	HSTL 1.5V Class II	50	0	V_{REF}	0.75
HSTL135I	HSTL 1.35V Class I	50	0	V_{REF}	0.675

© 2024 Microchip Technology Inc. and its subsidiaries

.....continued

Standard	Description	R_{REF} (Ω)	C_{REF} (pF)	V_{MEAS} (V)	V_{REF} (V)
HSTL135II	HSTL 1.35V Class II	50	0	V_{REF}	0.675
HSTL12I	HSTL 1.2V Class I	50	0	V_{REF}	0.6
HSTL12II	HSTL 1.2V Class II	50	0	V_{REF}	0.6
HSUL18I	High-speed unterminated logic 1.8V Class I	50	0	V_{REF}	0.9
HSUL18II	HSUL 1.8V Class II	50	0	V_{REF}	0.9
HSUL12I	HSUL 1.2V Class I	50	0	V_{REF}	0.6
POD12I	Pseudo open drain (POD) logic 1.2V Class I	50	0	V_{REF}	0.84
POD12II	POD 1.2V Class II	50	0	V_{REF}	0.84
LVDS33	LVDS 3.3V	100	0	0[1]	0
LVDS25	LVDS 2.5V	100	0	0[1]	0
LCMDS33	Low-Common Mode Differential Signaling (LCMDS) 3.3V	100	0	0[1]	0
LCMDS25	LCMDS 2.5V	100	0	0	0
RSDS33	Reduced swing differential signaling 3.3V	100	0	0[1]	0
RSDS25	RSDS 2.5V	100	0	0[1]	0
MINILVDS33	Mini-LVDS 3.3V	100	0	0[1]	0
MINILVDS25	Mini-LVDS 2.5V	100	0	0[1]	0
SUBLVDS33	Sub-LVDS 3.3V	100	0	0[1]	0
SUBLVDS25	Sub-LVDS 2.5V	100	0	0[1]	0
PPDS33	Point-to-point differential signaling 3.3V	100	0	0[1]	0
PPDS25	PPDS 2.5V	100	0	0[1]	0
SLVS33	Scalable low-voltage signaling 3.3V	100	0	0[1]	0
SLVS25	SLVS 2.5V	100	0	0[1]	0
SLVSE15	SLVS 1.5V	100	0	0[1]	0
HCSL33	High-speed current steering logic 3.3V	100	0	0[1]	0
HCSL25	HCSL 2.5V	100	0	0[1]	0
BUSLVDSE25	Bus LVDS	100	0	0[1]	0
MLVDSE25	Multipoint LVDS 2.5V	100	0	0[1]	0
LVPECLE33	Low-voltage positive emitter-coupled logic	100	0	0[1]	0
MIPIE25	Mobile industry processor interface 2.5V	100	0	0[1]	0
SSTL25I	Differential SSTL 2.5V Class I	50	0	0[1]	0
SSTL25II	Differential SSTL 2.5V Class II	50	0	0[1]	0
SSTL18I	Differential SSTL 1.8V Class I	50	0	0[1]	0
SSTL18II	Differential SSTL 1.8V Class II	50	0	0[1]	0
SSTL15I	Differential SSTL 1.5V Class I	50	0	0[1]	0
SSTL15II	Differential SSTL 1.5V Class II	50	0	0[1]	0
SSTL135I	Differential SSTL 1.35V Class I	50	0	0[1]	0
SSTL135II	Differential SSTL 1.35V Class II	50	0	0[1]	0
HSTL15I	Differential HSTL 1.5V Class I	50	0	0[1]	0
HSTL15II	Differential HSTL 1.5V Class II	50	0	0[1]	0

© 2024 Microchip Technology Inc. and its subsidiaries

.....continued					
Standard	Description	R_{REF} (Ω)	C_{REF} (pF)	V_{MEAS} (V)	V_{REF} (V)
HSTL135I	Differential HSTL 1.35V Class I	50	0	0[1]	0
HSTL135II	Differential HSTL 1.35V Class II	50	0	0[1]	0
HSTL12I	Differential HSTL 1.2V Class I	50	0	0[1]	0
HSTL12II	Differential HSTL 1.2V Class II	50	0	0[1]	0
HSUL18I	Differential HSUL 1.8V Class I	50	0	0[1]	0
HSUL18II	Differential HSUL 1.8V Class II	50	0	0[1]	0
HSUL12I	Differential HSUL 1.2V Class I	50	0	0[1]	0
POD12I	Differential POD 1.2V Class II	50	0	0[1]	0
POD12II	Differential POD 1.2V Class II	50	0	0[1]	0

1. The value given is the differential output voltage.

Figure 4-1. Output Delay Measurement—Single-Ended Test Setup

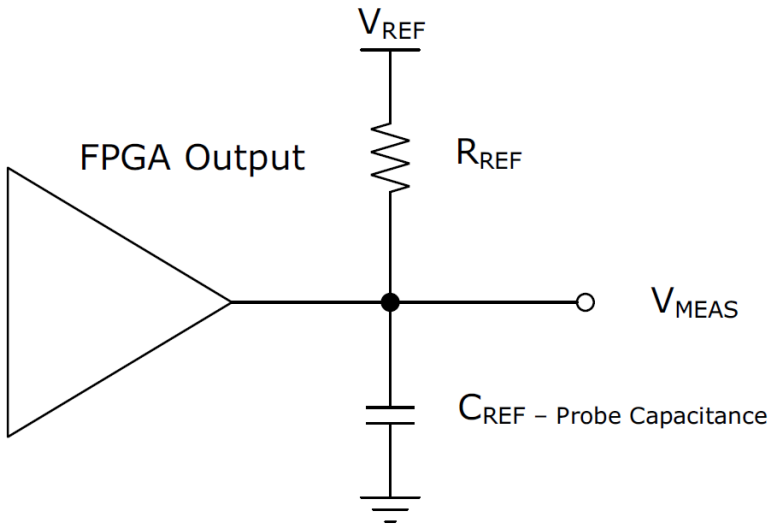

Figure 4-2. Output Delay Measurement—Differential Test Setup

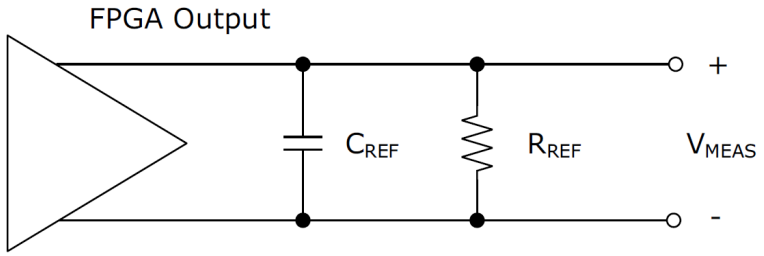

4.1.3 Input Buffer Speed

The following tables describe input buffer speed.

Table 4-3. HSIO Maximum Input Buffer Speed

Standard	STD	–1	Unit
LVDS18	1250	1250	Mbps

© 2024 Microchip Technology Inc. and its subsidiaries

.....continued			
Standard	**STD**	**–1**	**Unit**
LCMDS18	1250	1250	Mbps
HCSL18	800	800	Mbps
RSDS18	800	800	Mbps
MINILVDS18	800	800	Mbps
SUBLVDS18	800	800	Mbps
PPDS18	800	800	Mbps
SLVS18	800	800	Mbps
SSTL18I	800	1066	Mbps
SSTL18II	800	1066	Mbps
SSTL15I	1066	1333	Mbps
SSTL15II	1066	1333	Mbps
SSTL135I	1066	1333	Mbps
SSTL135II	1066	1333	Mbps
HSTL15I	900	1100	Mbps
HSTL15II	900	1100	Mbps
HSTL135I	1066	1066	Mbps
HSTL135II	1066	1066	Mbps
HSUL18I	400	400	Mbps
HSUL18II	400	400	Mbps
HSUL12I	1066	1333	Mbps
HSTL12I	1066	1266	Mbps
HSTL12II	1066	1266	Mbps
POD12I	1333	1600	Mbps
POD12II	1333	1600	Mbps
LVCMOS18 (12 mA)	500	500	Mbps
LVCMOS15 (10 mA)	500	500	Mbps
LVCMOS12 (8 mA)	300	300	Mbps

Notes:

- Performance is achieved with V_{ID} ≥200 mV.
- LVDS18 configuration should be used in conjunction with I/O CDR when implementing SGMII receivers.

Table 4-4. GPIO Maximum Input Buffer Speed[1,2,4]

Standard	**STD**	**–1**	**Unit**
LVDS18G/LVDS25/LVDS33/LCMDS25/LCMDS33	1250	1600	Mbps
RSDS25/RSDS33	800	800	Mbps
MINILVDS25/MINILVDS33	800	800	Mbps
SUBLVDS25/SUBLVDS33	800	800	Mbps
PPDS25/PPDS33	800	800	Mbps

© 2024 Microchip Technology Inc. and its subsidiaries

.....continued			
Standard	**STD**	**–1**	**Unit**
SLVS25/SLVS33	800	800	Mbps
SLVSE15	800	800	Mbps
HCSL25/HCSL33	800	800	Mbps
BUSLVDSE25	800	800	Mbps
MLVDSE25	800	800	Mbps
LVPECL33	800	800	Mbps
SSTL25I	800	800	Mbps
SSTL25II	800	800	Mbps
SSTL18I	800	800	Mbps
SSTL18II	800	800	Mbps
SSTL15I	800	1066	Mbps
SSTL15II	800	1066	Mbps
HSTL15I	800	900	Mbps
HSTL15II	800	900	Mbps
HSUL18I	400	400	Mbps
HSUL18II	400	400	Mbps
PCI	500	500	Mbps
LVTTL	500	500	Mbps
LVCMOS33	500	500	Mbps
LVCMOS25	500	500	Mbps
LVCMOS18	500	500	Mbps
LVCMOS15	500	500	Mbps
LVCMOS12	300	300	Mbps
MIPI25[3]	1000	1250	Mbps

1. All SSTLD/HSTLD/HSULD/LVSTLD/POD type receivers use the LVDS differential receiver.
2. Performance is achieved with V_{ID} ≥200 mV.
3. V_{ID} ≥ 200 mV, V_{ICM} ≥100 mV, T_j= 0.4 UI.
4. LVDS25 configuration should be used in conjunction with I/O CDR when implementing SGMII receivers.

4.1.4 Output Buffer Speed

The following tables describe output buffer speed.

Table 4-5. HSIO Maximum Output Buffer Speed

Standard	STD	–1	Unit
SSTL18I	800	1066	Mbps
SSTL18II	800	1066	Mbps
SSTL18I (differential)	800	1066	Mbps
SSTL18II (differential)	800	1066	Mbps
SSTL15I	1066	1333	Mbps

© 2024 Microchip Technology Inc. and its subsidiaries

.....continued			
Standard	**STD**	**–1**	**Unit**
SSTL15II	1066	1333	Mbps
SSTL15I (differential)	1066	1333	Mbps
SSTL15II (differential)	1066	1333	Mbps
SSTL135I	1066	1333	Mbps
SSTL135II	1066	1333	Mbps
SSTL135I (differential)	1066	1333	Mbps
SSTL135II (differential)	1066	1333	Mbps
HSTL15I	900	1100	Mbps
HSTL15II	900	1100	Mbps
HSTL15I (differential)	900	1100	Mbps
HSTL15II (differential)	900	1100	Mbps
HSTL135I	1066	1066	Mbps
HSTL135II	1066	1066	Mbps
HSTL135I (differential)	1066	1066	Mbps
HSTL135II (differential)	1066	1066	Mbps
HSUL18I	400	400	Mbps
HSUL18II	400	400	Mbps
HSUL18I (differential)	400	400	Mbps
HSUL18II (differential)	400	400	Mbps
HSUL12I	1066	1333	Mbps
HSUL12I (differential)	1066	1333	Mbps
HSTL12I	1066	1266	Mbps
HSTL12II	1066	1266	Mbps
HSTL12I (differential)	1066	1266	Mbps
HSTL12II (differential)	1066	1266	Mbps
POD12I	1333	1600	Mbps
POD12II	1333	1600	Mbps
LVCMOS18 (12 mA)	500	500	Mbps
LVCMOS15 (10 mA)	500	500	Mbps
LVCMOS12 (8 mA)	250	300	Mbps

Table 4-6. GPIO Maximum Output Buffer Speed

Standard	STD	–1	Unit
LVDS18G	1250	1250	Mbps
LVDS25/LCMDS25	1250	1250	Mbps
LVDS33/LCMDS33	1250	1600	Mbps
RSDS25	800	800	Mbps
MINILVDS25	800	800	Mbps
SUBLVDS25	800	800	Mbps
PPDS25	800	800	Mbps

© 2024 Microchip Technology Inc. and its subsidiaries

.....continued

Standard	STD	–1	Unit
SLVSE15	500	500	Mbps
BUSLVDSE25	500	500	Mbps
MLVDSE25	500	500	Mbps
LVPECLE33	500	500	Mbps
SSTL25I	800	800	Mbps
SSTL25II	800	800	Mbps
SSTL25I (differential)	800	800	Mbps
SSTL25II (differential)	800	800	Mbps
SSTL18I	800	800	Mbps
SSTL18II	800	800	Mbps
SSTL18I (differential)	800	800	Mbps
SSTL18II (differential)	800	800	Mbps
SSTL15I	800	1066	Mbps
SSTL15II	800	1066	Mbps
SSTL15I (differential)	800	1066	Mbps
SSTL15II (differential)	800	1066	Mbps
HSTL15I	900	900	Mbps
HSTL15II	900	900	Mbps
HSTL15I (differential)	900	900	Mbps
HSTL15II (differential)	900	900	Mbps
HSUL18I	400	400	Mbps
HSUL18II	400	400	Mbps
HSUL18I (differential)	400	400	Mbps
HSUL18II (differential)	400	400	Mbps
PCI	500	500	Mbps
LVTTL (20 mA)	500	500	Mbps
LVCMOS33 (20 mA)	500	500	Mbps
LVCMOS25 (16 mA)	500	500	Mbps
LVCMOS18 (12 mA)	500	500	Mbps
LVCMOS15 (10 mA)	500	500	Mbps
LVCMOS12 (8 mA)	250	300	Mbps
MIPIE25	1000	1000	Mbps

Note: LVDS25 configuration should be used when implementing SGMII transmitters.

4.1.5 Maximum PHY Rate for Memory Interface IP

The following tables describe the maximum PHY rate for memory interface IP.

© 2024 Microchip Technology Inc. and its subsidiaries

Table 4-7. Maximum PHY Rate for Memory Interfaces IP for HSIO Banks

Memory Standard	Gearing Ratio	V_{DDAUX}	V_{DDI}	STD (Mbps) Min	STD (Mbps) Max	–1 (Mbps) Min	–1 (Mbps) Max	Fabric Clock STD Min (MHz)	Fabric Clock STD Max (MHz)	Fabric Clock –1 Min (MHz)	Fabric Clock –1 Max (MHz)
DDR4	8:1	1.8V	1.2V	800	1333	800	1600	100	167	100	200
DDR3	8:1	1.8V	1.5V	800	1067	800	1333	100	133	100	167
DDR3L	8:1	1.8V	1.35V	800	1067	800	1333	100	133	100	167
LPDDR3	8:1	1.8V	1.2V	800	800	800	1333	100	133	100	167
QDRII+	8:1	1.8V	1.5V	500	900	500	1100	62.5	112.5	62.5	137.5
RLDRAM3[1]	8:1	1.8V	1.35V	—	1067	—	1067	—	133	—	133
RLDRAM3[1]	4:1	1.8V	1.35V	—	667	—	800	—	167	—	200
RLDRAM3[1]	2:1	1.8V	1.35V	—	333	—	400	—	167	—	200
RLDRAMII[1]	8:1	1.8V	1.8V	—	800	—	1067	—	100	—	133
RLDRAMII[1]	4:1	1.8V	1.8V	—	667	—	800	—	167	—	200
RLDRAMII[1]	2:1	1.8V	1.8V	—	333	—	400	—	167	—	200

1. Simulation data only. Microchip does not provide a soft controller for RLDRAMII and RLDRAM3.

Table 4-8. Maximum PHY Rate for Memory Interfaces IP for GPIO Banks

Memory Standard	Gearing Ratio	V_{DDAUX}	V_{DDI}	STD (Mbps) Min	STD (Mbps) Max	–1 (Mbps) Min	–1 (Mbps) Max	Fabric Clock STD Min (MHz)	Fabric Clock STD Max (MHz)	Fabric Clock –1 Min (MHz)	Fabric Clock –1 Max (MHz)
DDR3	8:1	2.5V	1.5V	800	800	800	1067	100	100	100	133
QDRII+	8:1	2.5V	1.5V	500	900	500	900	62.5	112.5	62.5	112.5
RLDRAMII[1]	4:1	2.5V	1.8V	—	800	—	800	—	200	—	200
RLDRAMII[1]	2:1	2.5V	1.8V	—	400	—	400	—	200	—	200

1. Simulation data only. RLDRAMII is currently not supported with a soft IP controller.

4.1.6 User I/O Switching Characteristics

The following section describes user I/O switching characteristics. The following interface names are described in the RT PolarFire FPGA User I/O User Guide.

4.1.6.1 I/O Digital

The following tables describe I/O digital.

Table 4-9. I/O Digital Receive Single-Data Rate Switching Characteristics[1]

Parameter	Interface Name	Topology	I/O Type	STD (MHz)	–1 (MHz)	STD (Mbps)	–1 (Mbps)	Clock-to-Data Condition
Input F_{MAX}	RX_SDR_G_A	Rx SDR	HSIO, GPIO	500	500	500	500	From a global clock source, aligned
Input F_{MAX}	RX_SDR_R_A	Rx SDR	HSIO, GPIO	250	250	250	250	From a regional clock source, aligned

© 2024 Microchip Technology Inc. and its subsidiaries

.....continued								
Parameter	Interface Name	Topology	I/O Type	STD (MHz)	–1 (MHz)	STD (Mbps)	–1 (Mbps)	Clock-to-Data Condition
Input F_{MAX}	RX_SDR_G_C	Rx SDR	HSIO, GPIO	500	500	500	500	From a global clock source, centered
Input F_{MAX}	RX_SDR_R_C	Rx SDR	HSIO, GPIO	250	250	250	250	From a regional clock source, centered

1. Unless otherwise noted, all data rates listed are achieved with static IOD tap settings.

Table 4-10. I/O Digital Receive Double Data Rate Switching Characteristics[1,2,3,4]

Parameter	Interface Name	Topology	I/O Type	STD (MHz)	–1 (MHz)	STD (Mbps)	–1 (Mbps)	Clock-to-Data Condition
Input F_{MAX}	RX_DDR_G_A	Rx DDR	HSIO	335	345	670	690	From a global clock source, aligned
			GPIO	310	325	620	650	
Input F_{MAX}	RX_DDR_R_A	Rx DDR	HSIO	250	250	500	500	From a regional clock source, aligned
			GPIO	250	250	500	500	
Input F_{MAX}	RX_DDR_G_C	Rx DDR	HSIO	335	345	670	690	From a global clock source, centered
			GPIO	310	325	620	650	
Input F_{MAX}	RX_DDR_R_C	Rx DDR	HSIO	250	250	500	500	From a regional clock source, centered
			GPIO	250	250	500	500	
Input F_{MAX} 2:1	RX_DDRX_B_G_A	Rx DDR digital mode	HSIO	350	350	700	700	From a HS_IO_CLK clock source, aligned, global fabric clock
			GPIO	300	310	600	620	
Input F_{MAX} 4:1	RX_DDRX_B_G_A	Rx DDR digital mode	HSIO	350	350	700	700	From a HS_IO_CLK clock source, aligned, global fabric clock
			GPIO	300	310	600	620	
Input F_{MAX} 3.5:1	RX_DDRX_B_G_FA	Rx DDR digital mode for fractional	HSIO	350	350	700	700	From a HS_IO_CLK clock source, aligned, global fabric clock, fractional input
			GPIO	320	320	640	640	
Input F_{MAX} 2:1	RX_DDRX_B_G_C	Rx DDR digital mode	HSIO	350	350	700	700	From a HS_IO_CLK clock source, centered, global fabric clock
			GPIO	300	310	600	620	
Input F_{MAX} 4:1 Input F_{MAX} 5:1	RX_DDRX_B_G_C	Rx DDR digital mode	HSIO	350	350	700	700	From a HS_IO_CLK clock source, centered, global fabric clock
			GPIO	300	310	600	620	
Input F_{MAX} 4:1	RX_DDRX_B_G_DYN_MIPI[3]	Rx DDR digital mode for MIPI	GPIO	500[4]	750[4]	1000[4]	1500[4]	From a HS_IO_CLK clock source, centered, global fabric clock
Input F_{MAX} 2:1	RX_DDRX_B_R_A	Rx DDR digital mode	HSIO	220	270	440	540	From a HS_IO_CLK clock source, aligned, regional fabric clock
			GPIO	205	250	410	500	
Input F_{MAX} 4:1 Input F_{MAX} 5:1	RX_DDRX_B_R_A	Rx DDR digital mode	HSIO	220	270	440	540	From a HS_IO_CLK clock source, aligned, regional fabric clock
			GPIO	205	250	410	500	

© 2024 Microchip Technology Inc. and its subsidiaries

.....continued

Parameter	Interface Name	Topology	I/O Type	STD (MHz)	–1 (MHz)	STD (Mbps)	–1 (Mbps)	Clock-to-Data Condition
Input F_{MAX} 2:1	RX_DDRX_B_R_C	Rx DDR digital mode	HSIO	220	270	440	540	From a HS_IO_CLK clock source, centered, regional fabric clock
			GPIO	205	250	410	500	
Input F_{MAX} 4:1 Input F_{MAX} 5:1	RX_DDRX_B_R_C	Rx DDR digital mode	HSIO	220	270	440	540	From a HS_IO_CLK clock source, centered, regional fabric clock
			GPIO	205	250	410	500	

1. A centered clock-to-data interface can be created with a negedge launch of the data.
2. Unless otherwise noted, all data rates listed are achieved with static IOD tap settings.
3. Data rates listed are achieved using dynamic training.
4. $V_{ID} \geq 200$ mV, $V_{ICM} \geq 100$ mV, $T_j = 0.4$ UI.

Table 4-11. I/O Digital Transmit Single Data Rate Switching Characteristics[1,2]

Parameter	Interface Name	Topology	I/O Type	STD (MHz)	–1 (MHz)	STD (Mbps)	–1 (Mbps)	Forwarded Clock-to-Data Skew
Output F_{MAX}	TX_SDR_G_A	Tx SDR	HSIO, GPIO	500	500	500	500	From a global clock source, aligned[1]
	TX_SDR_G_C	Tx SDR	HSIO, GPIO	500	500	500	500	From a global clock source, centered[1]

1. A centered clock-to-data interface can be created with a negedge launch of the data.
2. Unless otherwise noted, all data rates listed are achieved with static IOD tap settings.

Table 4-12. I/O Digital Transmit Double Data Rate Switching Characteristics

Parameter	Interface Name	Topology	I/O Type	STD (MHz)	–1 (MHz)	STD (Mbps)	–1 (Mbps)	Forwarded Clock-to-Data Skew
Output F_{MAX}	TX_DDR_G_A	Tx DDR	HSIO, GPIO	500	500	1000	1000	From a global clock source, aligned
	TX_DDR_G_C	Tx DDR	HSIO, GPIO	500	500	1000	1000	From a global clock source, centered
Output F_{MAX} 2:1	TX_DDRX_B_A	Tx DDR digital mode	HSIO	400	500	800	1000	From a HS_IO_CLK clock source, aligned
Output F_{MAX} 4:1 Output F_{MAX} 5:1	TX_DDRX_B_A	Tx DDR digital mode	HSIO	667	800	1333	1600	From a HS_IO_CLK clock source, aligned
Output F_{MAX} 2:1	TX_DDRX_B_C	Tx DDR digital mode	HSIO	400	500	800	1000	From a HS_IO_CLK clock source, centered with PLL
Output F_{MAX} 4:1 Output F_{MAX} 5:1	TX_DDRX_B_C	Tx DDR digital mode	HSIO	667	800	1333	1600	From a HS_IO_CLK clock source, centered with PLL
Output F_{MAX} 2:1	TX_DDRX_B_A	Tx DDR digital mode	GPIO	400	500	800	1000	From a HS_IO_CLK clock source, aligned
Output F_{MAX} 4:1 Output F_{MAX} 5:1	TX_DDRX_B_A	Tx DDR digital mode	GPIO	625	800	1250	1600	From a HS_IO_CLK clock source, aligned

© 2024 Microchip Technology Inc. and its subsidiaries

.....continued

Parameter	Interface Name	Topology	I/O Type	STD (MHz)	–1 (MHz)	STD (Mbps)	–1 (Mbps)	Forwarded Clock-to-Data Skew
Output F_{MAX} 2:1	TX_DDRX_B_C	Tx DDR digital mode	GPIO	400	500	800	1000	From a HS_IO_CLK clock source, centered with PLL
Output F_{MAX} 4:1 Output F_{MAX} 5:1	TX_DDRX_B_C	Tx DDR digital mode	GPIO	625	800	1250	1600	From a HS_IO_CLK clock source, centered with PLL
Output F_{MAX} 4:1	TX_DDRX_B_C_MIPI	Tx DDR digital mode for MIPI	GPIO	500	500	1000	1000	From a HS_IO_CLK clock source, centered with PLL

Table 4-13. Programmable Delay

Parameter	STD Min	STD Typ	STD Max	–1 Min	–1 Typ	–1 Max	Unit
In delay, out delay, DLL delay step sizes	12.7	30	35	12.7	25	29.5	ps

Note: Refer to Libero timing reports for configuration specific intrinsic and incremental delays.

Figure 4-3. LVDS Jitter Tolerance Plot

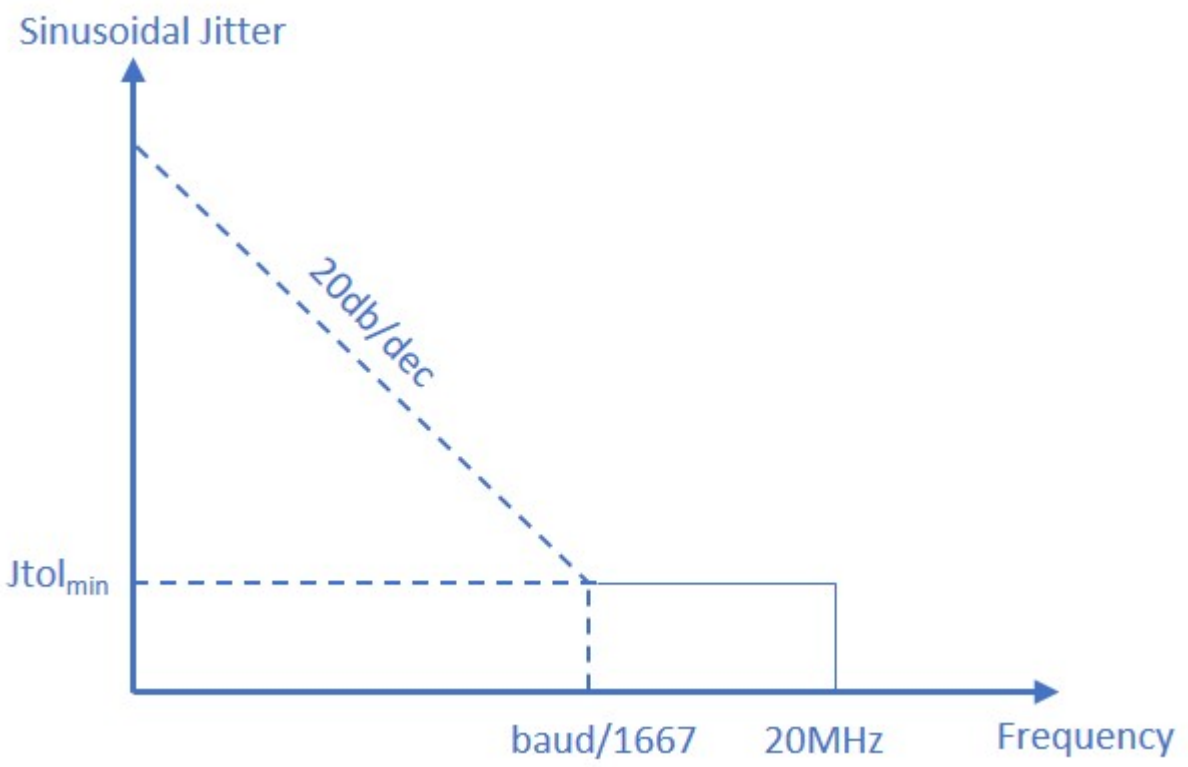

Table 4-14. I/O CDR Switching Characteristics

Buffer Type	I/O Configuration	Min Data Rate (Mbps)	Max Data Rate (Mbps)	Max Tx to Rx Frequency Offset (ppm)	Jtol$_{min}$ (UI)
HSIO[1, 2]	LVDS18	266	1250	±200	0.08
HSIO[1, 2]	LVDS18	266	1250	±100	0.1

© 2024 Microchip Technology Inc. and its subsidiaries

.....continued					
Buffer Type	**I/O Configuration**	**Min Data Rate (Mbps)**	**Max Data Rate (Mbps)**	**Max Tx to Rx Frequency Offset (ppm)**	**$Jtol_{min}$ (UI)**
GPIO[1, 3]	LVDS25	266	1250	±100	0.1
GPIO[1, 3]	LVDS18G	266	1250	±100	0.1

1. Jitter tolerance of applied sinusoidal jitter from 1 KHz to 120 MHz, as shown in Figure 4-3. It is measured in addition to a stressed eye of T_j = 0.24 UI with V_{ICM} of 1.25V and V_{IDmin} of 250 mV, with the CDR operating at a rate of 1250 Mbps plus or minus the ppm offset listed.
2. HSIO LVDS uses an external 100Ω differential termination resistor. For more information, see LVDS specification in Table 3-18.
3. GPIO LVDS uses an internal 100Ω differential termination resistor. For more information, see LVDS specification in Table 3-18.

4.2 Clocking Specifications

This section describes the PLL and DLL clocking and oscillator specifications.

4.2.1 Clocking

The following table describes clocking specifications.

Table 4-15. Global and Regional Clock Characteristics (–55 °C to 125 °C)

Parameter	Symbol	V_{DD} = 1.0V STD	V_{DD} = 1.0V –1	V_{DD} = 1.05V STD	V_{DD} = 1.05V –1	Unit	Condition
Global clock F_{MAX}	F_{MAXG}	500	500	500	500	MHz	—
Regional clock F_{MAX}	F_{MAXR}	375	375	375	375	MHz	Transceiver interfaces only
	F_{MAXR}	250	250	250	250	MHz	All other interfaces
Global clock duty cycle distortion	T_{DCDG}	190	190	190	190	ps	At 500 MHz
Regional clock duty cycle distortion	T_{DCDR}	120	120	120	120	ps	At 250 MHz

The following table describes clocking specifications.

Table 4-16. High-Speed I/O Clock Characteristics (–55 °C to 125 °C)

Parameter	Symbol	V_{DD} = 1.0V STD	V_{DD} = 1.0V –1	V_{DD} = 1.05V STD	V_{DD} = 1.05V –1	Unit	Condition
High-speed I/O clock F_{MAX}	F_{MAXB}	1000	1250	1000	1250	MHz	HSIO and GPIO
High-speed I/O clock skew[1]	F_{SKEWB}	30	20	30	20	ps	HSIO without bridging
	F_{SKEWB}	See note 3				ps	HSIO with bridging
	F_{SKEWB}	45	35	45	35	ps	GPIO without bridging
	F_{SKEWB}	75	60	75	60	ps	GPIO with bridging

© 2024 Microchip Technology Inc. and its subsidiaries

.....continued							
Parameter	**Symbol**	**V_{DD} = 1.0V STD**	**V_{DD} = 1.0V –1**	**V_{DD} = 1.05V STD**	**V_{DD} = 1.05V –1**	**Unit**	**Condition**
High-speed I/O clock duty cycle distortion[2]	T_{DCB}	90	90	90	90	ps	HSIO without bridging
	T_{DCB}	115	115	115	115	ps	HSIO with bridging
	T_{DCB}	90	90	90	90	ps	GPIO without bridging
	T_{DCB}	115	115	115	115	ps	GPIO with bridging

1. F_{SKEWB} is the worst-case clock-tree skew observable between sequential I/O elements. Clock-tree skew is significantly smaller at I/O registers close to each other because they are fed by the same or adjacent clock-tree branches. Use the Libero SmartTime Timing Analyzer tool to evaluate clock skew specific to the design.
2. Parameters listed in this table correspond to the worst-case duty cycle distortion observable at the I/O flip flops. IBIS should be used to calculate any additional duty cycle distortion that might be caused by asymmetrical rise/fall times for any I/O standard.
3. See Table 4-17.

The following table describes high-speed I/O clock skew (F_{SKEWB}) with bridging.

Note: F_{SKEWB} is the worst-case clock-tree skew observable between sequential I/O elements. Clock-tree skew is significantly smaller at I/O registers close to each other and fed by the same or adjacent clock-tree branches. Use the Libero SmartTime Timing Analyzer tool to evaluate clock skew specific to the design.

Table 4-17. HSIO Clock Skew with Bridging (–55 °C to 125 °C)[1,2]

Device	**Total I/O Banks**	**Bridging Source**	**V_{DD} = 1.0V STD**	**V_{DD} = 1.0V –1**	**V_{DD} = 1.05V STD**	**V_{DD} = 1.05V –1**	**Unit**
MPFS025T	1	NNW[1]	40	30	40	30	ps
	1	NNE[2]	40	30	40	30	ps
MPFS095T	2	NNW[1]	220	160	220	160	ps
	2	NNE[2]	160	110	160	110	ps
MPFS160T	2	NNW[1]	220	160	220	160	ps
	2	NNE[2]	160	110	160	110	ps
MPFS250T	2	NNW[1]	280	200	280	200	ps
	2	NNE[2]	120	80	120	80	ps
MPFS460T	2	NNW[1]	280	200	280	200	ps
	2	NNE[2]	120	80	120	80	ps

1. NNW source designates bridging that originates from the north-west corner or PIOs inside I/O bank 0 (the most western I/O bank at the north edge).
2. NNE source designates bridging that originates from the north-east corner or PIOs inside I/O bank 1 (the most eastern I/O bank at the north edge).

4.2.2 PLL

The following table describes PLL.

© 2024 Microchip Technology Inc. and its subsidiaries

Table 4-18. PLL Electrical Characteristics

Parameter	Symbol	Min	Typ	Max	Unit	Condition
Input clock frequency (integer mode)	F_{INI}	1	—	1250	MHz	—
Input clock frequency (fractional mode)	F_{INF}	10	—	1250	MHz	—
Minimum reference or feedback pulse width[1]	$F_{INPULSE}$	200	—	—	ps	—
Frequency at the Frequency Phase Detector (PFD) (integer mode)	F_{PHDETI}	1	—	312	MHz	—
Frequency at the PFD (fractional mode)	F_{PHDETF}	10	—	225	MHz	—
Allowable input duty cycle	F_{INDUTY}	25	—	75	%	—
Maximum input period clock jitter (reference and feedback clocks)[2]	F_{MAXINJ}	—	120	1000	ps	—
PLL VCO frequency	F_{VCO}	800	—	5000	MHz	—
Loop bandwidth (Int)[3]	F_{BW}	F_{PHDET}/55	F_{PHDET}/44	F_{PHDET}/30	MHz	—
Loop bandwidth (FRAC)[3]	F_{BW}	F_{PHDET}/91	F_{PHDET}/77	F_{PHDET}/56	MHz	—
Static phase offset of the PLL outputs[4]	T_{SPO}	—	—	Max (±60 ps, ±0.5 degrees)	ps	—
PLL output period jitter[10, 11]	$T_{OUTJITTER}$	—	—	±0.0125*output_ period	ps	1.5 MHz ≤ F_{OUT} < 15 MHz
		—	—	135	ps	F_{OUT} ≥ 15 MHz
		—	—	±67.5	ps	
		—	—	16.67	ns	0.05 MHz ≤ F_{OUT} < 1.5 MHz
		—	—	±8.335	ns	
PLL output duty cycle precision	$T_{OUTDUTY}$	48	—	54	%	—
PLL lock time[5]	T_{LOCK}	—	—	Max (6.0 µs, 625 PFD cycles)	µs	—
PLL unlock time[6]	T_{UNLOCK}	2	—	8	PFD cycles	—
PLL output frequency	F_{OUT}	0.050	—	1250	MHz	—
Minimum power-down pulse width	T_{MPDPW}	1	—	—	µs	—
Maximum delay in the feedback path[7]	F_{MAXDFB}	—	—	1.5	PFD cycles	—
Spread spectrum modulation spread[8]	Mod_Spread	0.1	—	3.1	%	—
Spread spectrum modulation frequency[9]	Mod_Freq	F_{PHDETF}/ (128x63)	32	F_{PHDETF}/(128)	KHz	—

© 2024 Microchip Technology Inc. and its subsidiaries

1. Minimum time for high or low pulse width.
2. Maximum jitter the PLL can tolerate without losing lock.
3. Default bandwidth setting of BW_PROP_CTRL = 01 for Integer and Fraction modes leads to the typical estimated bandwidth. This bandwidth can be lowered by setting BW_PROP_CTRL = 00 and can be increased if BW_PROP_CTRL = 10 and will be at the highest value if BW_PROP_CTRL = 11.
4. Maximum (±3 Sigma) phase error between any two outputs with nominally aligned phases.
5. PFD cycles is REFDIV/$F_{IN[I/F]}$. For example, REFDIV = 1, F_{INI} = 25 MHz, lock time = Max (6.0 µs, 625 * 1/25 MHz) = 25 µs.
6. Unlock occurs if two cycles slip within two PFD cycles.
7. Maximum propagation delay of external feedback path in Deskew mode.
8. Programmable capability for depth of down spread or center spread modulation.
9. Programmable modulation rate based on the modulation divider setting (1 to 63).
10. Period jitter is measured at the output of the device using HSUL12 output buffers and includes the jitter effects of the reference clock source, PLL, clock routing networks, and output buffer. PLL is configured with internal feedback enabled and in integer mode. FPGA fabric is active during testing (75% utilization).
11. Jitter characteristics for protocol-specific industry standards are met due to improved input clock path and/or optimized VCO rates used. Contact technical support for protocol specific characterization reports.

Note: In order to meet all datasheet specifications, the PLL must be programmed such that the PLL Loop Bandwidth < (0.0017 * VCO Frequency) – 0.4863 MHz. The Libero PLL configuration tool will enforce this rule when creating PLL configurations.

4.2.3 DLL

The following table provides information about DLL.

Table 4-19. DLL Electrical Characteristics

Parameter[1]	Symbol	Min	Typ	Max	Unit
Input reference clock frequency	F_{INF}	133	—	800	MHz
Input feedback clock frequency	F_{INFDBF}	133	—	800	MHz
Primary output clock frequency	F_{OUTPF}	133	—	800	MHz
Secondary output clock frequency[2]	F_{OUTSF}	33.3	—	800	MHz
Input clock cycle-to-cycle jitter	F_{INJ}	—	—	200	ps
Output clock cycle-to-cycle jitter (with clean input clock)	$T_{OUTJITTERCC}$	—	—	Max (250 ps, 15% of clock period)	ps
Output clock period jitter (with clean input clock)	$T_{OUTJITTERP}$	—	—	Max (300 ps, 20% of clock period)	ps
Output clock-to-clock skew between two outputs with the same phase settings	T_{SKEW}	—	—	±150	ps
DLL lock time	T_{LOCK}	16	—	16K	Reference clock cycles
Minimum reset pulse width	T_{MRPW}	3	—	—	ns
Minimum input pulse width[3]	T_{MIPW}	20	—	—	ns
Minimum input clock pulse width high	T_{MPWH}	400	—	—	ps
Minimum input clock pulse width low	T_{MPWL}	400	—	—	ps
Delay step size	T_{DEL}	12.7	30	35	ps

© 2024 Microchip Technology Inc. and its subsidiaries

.....continued					
Parameter[1]	**Symbol**	**Min**	**Typ**	**Max**	**Unit**
Maximum delay block delay[4]	T_{DELMAX}	1.8		4.8	ns
Output clock duty cycle (with 50% duty cycle input)[5]	T_{DUTY}	40	—	60	%
Output clock duty cycle (with 50% duty cycle input)[6]	T_{DUTY50}	45	—	55	%

1. For all DLL modes.
2. Secondary output clock divided by four option.
3. On load, direction, move, hold, and update input signals.
4. 128 delay taps in one delay block.
5. Without duty cycle correction enabled.
6. With duty cycle correction enabled.

4.2.4 RC Oscillators

The following tables describe internal RC clock resources for user designs. They also describe system design with RF front-end information about emitters generated on-chip to support programming operations.

Table 4-20. 2 MHz RC Oscillator Electrical Characteristics

Parameter	Symbol	Min	Typ	Max	Unit
Operating frequency	RC_{2FREQ}	—	2	—	MHz
Accuracy	RC_{2FACC}	–10	—	+10	%
Duty cycle	RC_{2DC}	46	—	54	%
Peak-to-peak output period jitter	RC_{2PJIT}	—	5	10	ns
Peak-to-peak output cycle-to-cycle jitter	RC_{2CJIT}	—	5	10	ns
Operating current (V_{DD25})	RC_{2IVPPA}	—	—	60	µA
Operating current (V_{DD})	RC_{2IVDD}	—	—	2.6	µA

Table 4-21. 160 MHz RC Oscillator Electrical Characteristics

Parameter	Symbol	Min	Typ	Max	Unit	Condition
Operating frequency	RC_{SCFREQ}	—	160	—	MHz	–55 °C ≤ Tj ≤ 125 °C
Accuracy	RC_{SCFACC}	–6.5	—	+6.5	%	–40 °C ≤ T_j ≤ 100 °C
		–10	—	+10	%	–40 °C ≤ Tj ≤ 125 °C
		–10		+10	%	–55 °C ≤ Tj ≤ 125 °C
Duty cycle	RC_{SCDC}	47	—	52	%	–55 °C ≤ Tj ≤ 125 °C
Peak-to-peak output period jitter	RC_{SCPJIT}	—	—	600	ps	–55 °C ≤ Tj ≤ 125 °C

© 2024 Microchip Technology Inc. and its subsidiaries

.....continued						
Parameter	**Symbol**	**Min**	**Typ**	**Max**	**Unit**	**Condition**
Peak-to-peak output cycle-to-cycle jitter	RC_{SCCJIT}	—	—	172	ps	–55 °C ≤ Tj ≤ 125 °C
Operating current (V_{DD25})	RC_{SCVPPA}	—	—	599	µA	–55 °C ≤ Tj ≤ 125 °C
Operating current (V_{DD18})	RC_{SCVPP}	—	—	0.1	µA	–55 °C ≤ Tj ≤ 125 °C
Operating current (V_{DD})	RC_{SCVDD}	—	—	60.7	µA	–55 °C ≤ Tj ≤ 125 °C

4.2.5 Clock Jitter

Global clock, output clock, and transceiver clock jitter specifications are listed in this section. PLL jitter, DLL jitter, and RC oscillator jitter specifications are referenced in their respective sections.

Table 4-22. Period Jitter for Global Clocks[6, 7]

Global clocks are clock nets distributed throughout the FPGA using global networks. Jitter specifications listed in this table are applicable to –STD and –1 speed grade for all temperature grades.

	Global Clock Period Jitter					**Unit**
% FF used (of total FFs in device)[1, 2]	0%	15%	25%	50%	75%	%
Average toggle rate[3]	—	30%	30%	30%	30%	%
Effective FF toggle %[4]	0%	4.5%	7.5%	15.0%	22.5%	%
Max period jitter (absolute)	See Note 5	29	54	168	227	ps
Max period jitter (peak to peak)	See Note 5	±14.5	±27	±84	±113.5	ps

1. % Flip-Flop (FF) used is defined as the percentage of total device FFs that are switching in the largest clock domain within the FPGA (including synchronous and divided clocks).
2. The 50% and 75% FF used per clock domain are only shown to illustrate the impact of high utilization on a global clock net jitter. Typical designs are expected to have less than 25% FF used per clock domain (as defined in the preceeding note).
3. Measured jitter is generated at varying % FF used levels with a switching rate of 30%.
4. Effective FF toggle % is the product of % FF used and average toggle rate. In Table 4-22, jitter is specified for an average toggle rate of 30%. To determine jitter for a given combination, multiply FF used and average toggle rate then use the linear interpolation equation as shown in Figure 4-4.
5. Use PLL, DLL, 160 MHz RC Osc jitter specifications, or input jitter specifications, as applicable.
6. Refer to Table 4-23 for formulas to calculate period jitter as a function of the clocking topology.
7. For further details, see the PolarFire Family Clocking Resources User Guide (section Global Net Clock Jitter).

© 2024 Microchip Technology Inc. and its subsidiaries

Figure 4-4. Global Clock Period Jitter vs Effective FF Toggle Percentage

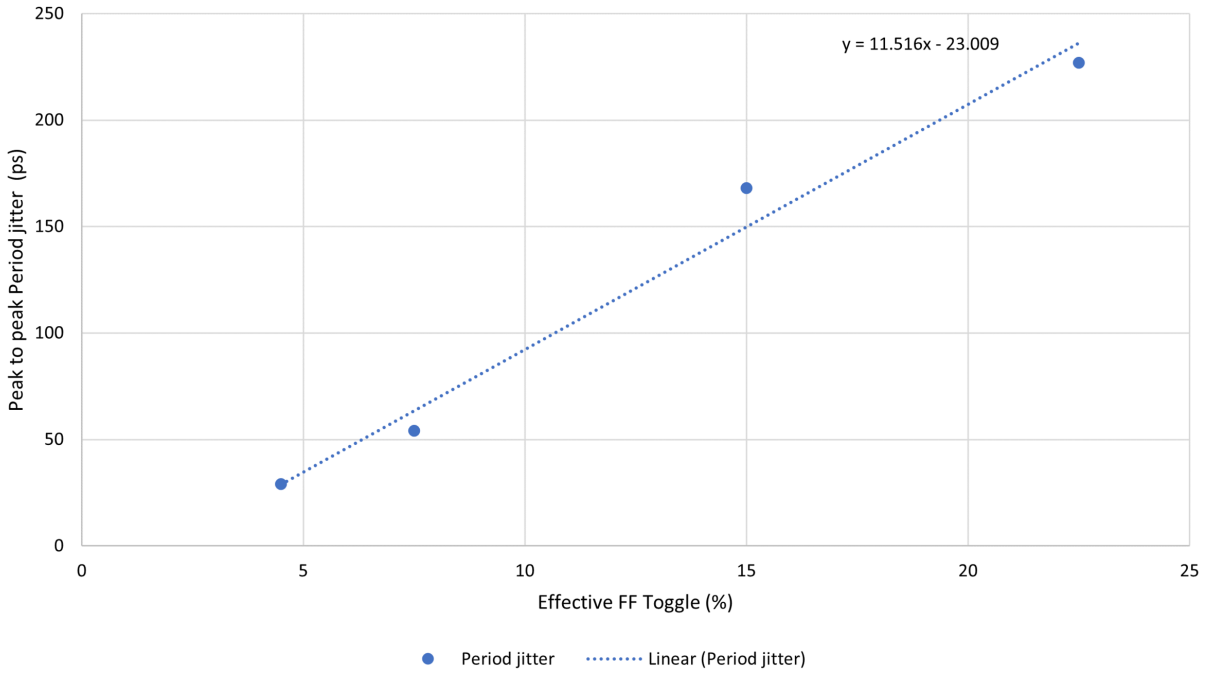

Table 4-23. Period Jitter Formula for Global Clocks

Topology	Formula
Inbuf → CCC → PLL → Global	Max (PLL jitter, Global clock jitter)
Inbuf → CCC → Global	Max (Input jitter, Global clock jitter)
Global → CCC → PLL → Global	Max (PLL jitter, Global clock jitter)
Global → CCC → Global	Global clock jitter
TX clock → CCC → PLL → Global	Max (PLL jitter, Global clock jitter)
TX clock → Global→ CCC → PLL → Global	Max (PLL jitter, Global clock jitter)
TX clock → Regional → CCC→ PLL	Max (PLL jitter, Global clock jitter)
RX clock → CCC → PLL → Global	Max (PLL jitter, Global clock jitter)
RX clock → Global→ CCC → PLL → Global	Max (PLL jitter, Global clock jitter)
RX clock → Regional → CCC→ PLL	Max (PLL jitter, Global clock jitter)
2 MHz / 160 MHz RCOsc → CCC → Global	Max (RCOSC jitter, Global clock jitter)
160 MHz RCOsc → CCC → PLL → Global [1]	Max (PLL jitter, Global clock jitter)
Inbuf → CCC → DLL → Global [2]	Max (Input jitter + DLL jitter, Global clock jitter)
Inbuf → CCC → DLL → PLL → Global [2, 3]	Max (PLL jitter, Global clock jitter)
Inbuf → CCC→ PLL → DLL → Global	Max (DLL jitter, Global clock jitter)

1. The 2 MHz RCOsc should not be used as reference clock of PLLs. The 160 MHz oscillation should be used instead for better PLL input jitter immunity.
2. Input jitter is additive to DLL output jitter. It should not exceed the maximum DLL input jitter allowed. Refer to Table 4-19 for information on jitter specifications.

© 2024 Microchip Technology Inc. and its subsidiaries

3. When cascading DLL into PLL, DLL output frequency should be limited such that the PLL input jitter requirement is met. Refer to Table 4-18 and Table 4-19 for information on jitter specifications.

Table 4-24. Period Jitter for External Output Clocks

External output clocks are generated within the FPGA, routed through global networks and propagated outside of the FPGA by means of HSIO or GPIO output buffers. Jitter specifications listed in this table are applicable to –STD and –1 speed grade for all temperature grades.

	External Output Clock Period Jitter						Unit
% FF used (of total FFs in device)[1,2]	0%	14%	23%	47%	56%	75%	%
Average toggle rate[3]	—	30%	30%	30%	30%	30%	%
Effective FF toggle %[4]	0%	4.2%	6.9%	14.1%	16.8%	22.5%	%
Max period jitter (absolute)	See Note 5	334	466	800	924	1140	ps
Max period jitter (peak to peak)	See Note 5	±167	±233	±400	±462	±570	ps

1. % Flip-Flop (FF) used is defined as the percentage of total device FFs that are switching in the largest clock domain within the FPGA (including synchronous and divided clocks).
2. The 50% and 75% FF used per clock domain are only shown to illustrate the impact of high utilization on a global clock net jitter. Typical designs are expected to have less than 25% FF used per clock domain (as defined in the preceding note).
3. Measured jitter is generated at varying % FF used levels with a switching rate of 30%.
4. Effective FF toggle % is the product of % FF used and average toggle rate. In Table 4-24, jitter is specified for an average toggle rate of 30%. To determine jitter for a given combination, multiply FF used and average toggle rate then use the linear interpolation equation as shown in Figure 4-5.
5. Use PLL, DLL, 160 MHz RC Osc jitter specifications, or input jitter specifications, as applicable.
6. All measurements were taken by observing the clock jitter from an FPGA output pin.
7. Refer to Table 4-25 for formulas to calculate period jitter as a function of the clocking topology.
8. For clock forwarded interfaces such as DDRx where both data and clock are sent from the same clock domain, this external jitter component should be ignored. Output jitter should be taken from the interface specification.
9. For further details, see the PolarFire and PolarFire SoC FPGA Clocking Resources Users Guide (section Global Net Clock Jitter).

© 2024 Microchip Technology Inc. and its subsidiaries

Figure 4-5. External Output Clock Period Jitter vs Effective FF Toggle Percentage

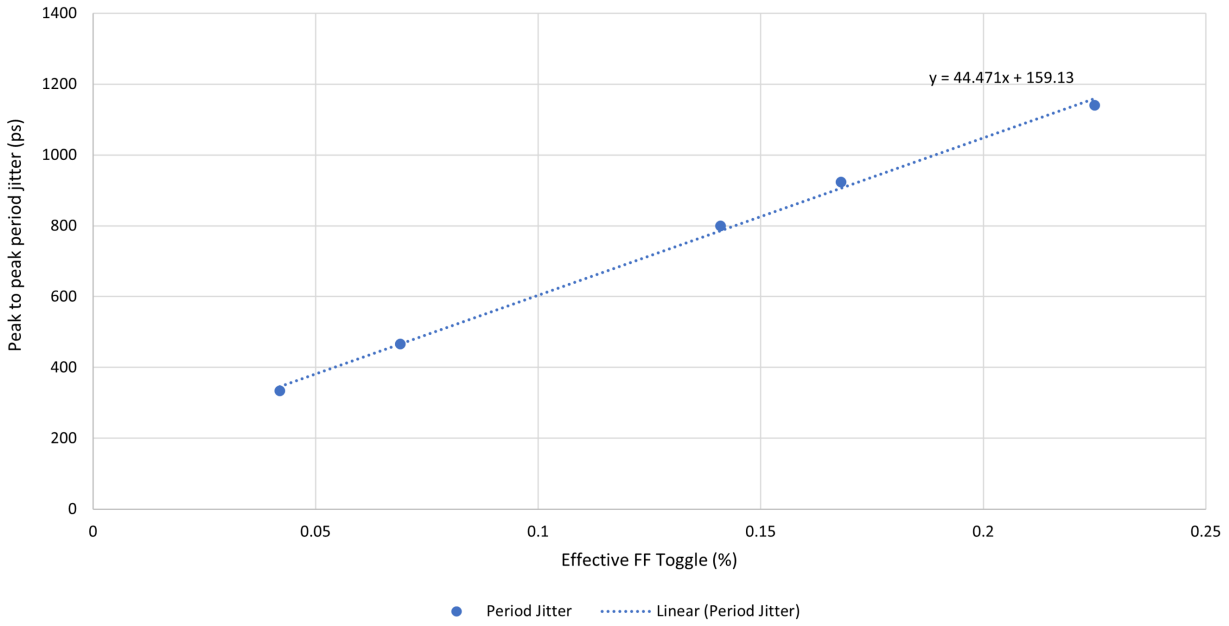

Table 4-25. Period Jitter Formula for External Output Clocks

Topology	Formula
Inbuf → CCC → PLL → Global → Outbuf	Max (PLL jitter, External output clock jitter)
Inbuf → CCC → Global → Outbuf	Max (Input jitter, External output clock jitter)
Global → CCC → PLL → Global → Outbuf	Max (PLL jitter, External output clock jitter)
Global → CCC → Global → Outbuf	External output clock jitter
TX clock → CCC → PLL → Global	Max (PLL jitter, External output clock jitter)
TX clock → Global→ CCC → PLL → Global	Max (PLL jitter, External output clock jitter)
TX clock → Regional → CCC→ PLL	Max (PLL jitter, External output clock jitter)
RX clock → CCC → PLL → Global	Max (PLL jitter, External output clock jitter)
RX clock → Global→ CCC → PLL → Global	Max (PLL jitter, External output clock jitter)
RX clock → Regional → CCC→ PLL	Max (PLL jitter, External output clock jitter)
2 MHz /160 MHz RCOsc → CCC → Global → Outbuf	Max (RCOsc jitter, External output clock jitter)
160 MHz RCOsc → CCC → PLL → Global → Outbuf [1]	Max (PLL jitter , External output clock jitter)
Inbuf → CCC → DLL → Global → Outbuf **2**	Max (Input jitter + DLL jitter, External output clock jitter)
Inbuf → CCC → DLL → PLL → Global → Outbuf [2,3]	Max (PLL jitter, External output clock jitter)
Inbuf → CCC→ PLL → DLL → Global → Outbuf	Max (DLL jitter, External output clock jitter)

1. The 2 MHz RCOsc should not be used as reference clock of PLLs. The 160 MHz Oscillation should be used instead for better PLL input jitter immunity.
2. Input jitter is additive to DLL output jitter. It should not exceed the maximum DLL input jitter allowed. Refer to Table 4-19 for information on jitter specifications.
3. When cascading DLL into PLL, DLL output frequency should be limited such that the PLL input jitter requirement is met. Refer to Table 4-18 and Table 4-19 for information on jitter specifications.

© 2024 Microchip Technology Inc. and its subsidiaries

Table 4-26. Period Jitter for Transceiver Clocks

Transceiver clocks are generated within the FPGA and routed to/from Transceiver TX and RX through global networks. Jitter specifications listed in this table are applicable to –STD and –1 speed grade for all temperature grades.

	Transceiver Clock Period Jitter					Unit
% FF used (of total FFs in device)[1,2]	0%	15%	25%	50%	75%	%
Average toggle rate[3]	-	30%	30%	30%	30%	%
Effective FF toggle %[4]	0%	4.5%	7.5%	15.0%	22.5%	%
Maximum TX clock period jitter (absolute)	60	89	114	228	287	ps
Maximum TX clock period jitter (peak to peak)	±30	±44.5	±57	±114	±143.5	ps
Maximum RX clock period jitter (absolute)	200	229	254	368	427	ps
Maximum RX clock period jitter (peak to peak)	±100	±114.5	±127	±184	±213.5	ps

Transceiver clocks are generated within the FPGA and routed to/from Transceiver TX and RX through global networks.

1. % Flip-Flop (FF) used is defined as the percentage of total device FFs that are switching in the largest clock domain within the FPGA (including synchronous and divided clocks).
2. The 50% and 75% FF used per clock domain are only shown to illustrate the impact of high utilization on a global clock net jitter. Typical designs are expected to have less than 25% FF used per clock domain (as defined in the preceding note).
3. Measured jitter is generated at varying % FF used levels with a switching rate of 30%.
4. Effective FF toggle % is the product of % FF used and average toggle rate. In Table 4-26, jitter is specified for an average toggle rate of 30%. To determine jitter for a given combination, multiply FF used and average toggle rate then use the linear interpolation equation as shown in Figure 4-6.
5. Refer to Table 4-27 for formulas to calculate period jitter as a function of the clocking topology.
6. For further details, see the PolarFire Family Transceiver Users Guide.

© 2024 Microchip Technology Inc. and its subsidiaries

Figure 4-6. Transceiver Clock Period vs Effective FF Toggle Percentage

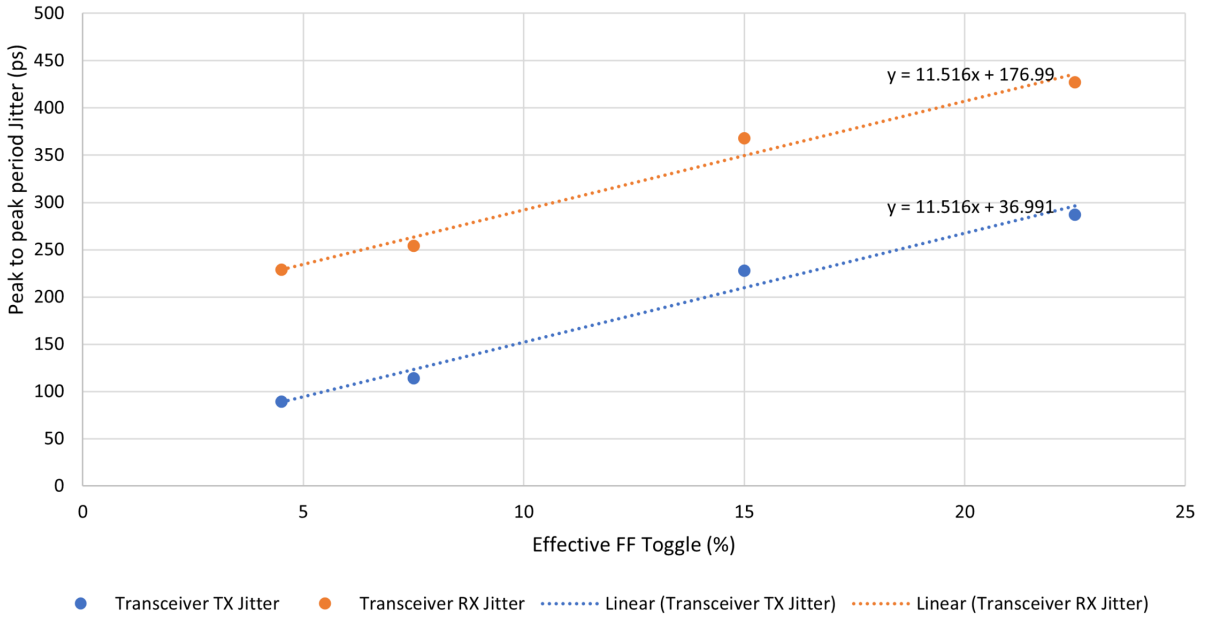

Table 4-27. Period Jitter Formula for Transceiver Clocks

Topology	Formula
TX clock → Global	TX clock jitter
TX clock → Regional	TX clock jitter
RX clock → Global	RX clock jitter
RX clock → Regional	RX clock jitter

4.3 Fabric Specifications

The following section describes specifications for the fabric.

4.3.1 Math Blocks

The following table lists the maximum operating frequency (F_{MAX}) of the math block for the miliatry temperature range (-55 °C ≤ Tj ≤ 125 °C).

Table 4-28. Math Block Performance (-55 °C to 125 °C)

Modes	V_{DD} = 1.0V –STD	V_{DD} = 1.0V –1	V_{DD} = 1.05V –STD	V_{DD} = 1.05V –1	Unit
18 × 18 multiplication	360	465	435	465	MHz
18 × 18 multiplication summed with 48-bit input	360	465	435	465	MHz
18 × 19 multiplier pre-adder ROM mode	355	460	430	460	MHz
Two 9 × 9 multiplication	360	465	435	465	MHz
9 × 9 dot product (DOTP)	300	465	435	465	MHz
Complex 18 × 19 multiplication	345	445	425	445	MHz

4.3.2 SRAM Blocks

The following table lists the maximum operating frequency (F_{MAX}) of the LSRAM block.

© 2024 Microchip Technology Inc. and its subsidiaries

Table 4-29. LSRAM Performance (–55 °C to 125 °C)

V_{DD} = 1.0V –STD	V_{DD} = 1.0V –1	V_{DD} = 1.05V –STD	V_{DD} = 1.05V –1	Unit	Condition
343	428	343	428	MHz	Two-port, all supported widths, pipelined, simple-write, and write-feed-through
309	428	309	428	MHz	Two-port, all supported widths, non-pipelined, simple-write, and write-feed-through
343	428	343	428	MHz	Dual-port, all supported widths, pipelined, simple-write, and write-feed-through
309	428	309	428	MHz	Dual-port, all supported widths, non-pipelined, simple-write, and write-feed-through
343	428	343	428	MHz	Two-port pipelined ECC mode, pipelined, simple-write, and write-feed-through
279	295	279	295	MHz	Two-port non-pipelined ECC mode, pipelined, simple-write, and write-feed-through
343	428	343	428	MHz	Two-port pipelined ECC mode, non-pipelined, simple-write, and write-feed-through
196	285	240	285	MHz	Two-port non-pipelined ECC mode, non-pipelined, simple-write, and write-feed-through
240	285	240	285	MHz	Two-port, all supported widths, pipelined, and read-before-write
240	285	240	285	MHz	Two-port, all supported widths, non-pipelined, and read-before-write
240	285	240	285	MHz	Dual-port, all supported widths, pipelined, and read-before-write
240	285	240	285	MHz	Dual-port, all supported widths, non-pipelined, and read-before-write
240	285	240	285	MHz	Two-port pipelined ECC mode, pipelined, and read-before-write
198	240	198	240	MHz	Two-port non-pipelined ECC mode, pipelined, and read-before-write
240	285	240	285	MHz	Two-port pipelined ECC mode, non-pipelined, and read-before-write
193	240	193	240	MHz	Two-port non-pipelined ECC mode, non-pipelined, and read-before-write

The following table lists the maximum operating frequency (F_{MAX}) of the µSRAM block.

Table 4-30. µSRAM Performance (–55 °C to 125 °C)

Parameter	Symbol	V_{DD} = 1.0V –STD	V_{DD} = 1.0V –1	V_{DD} = 1.05V –STD	V_{DD} = 1.05V –1	Unit	Condition
Operating frequency	F_{MAX}	400	415	450	480	MHz	Write-port
Read access time	Tac	–	2	–	2	ns	Read-port

The following table lists the maximum operating frequency (F_{MAX}) of the µPROM block.

Table 4-31. µPROM Performance (–55 °C to 125 °C)

Parameter	Symbol	V_{DD} = 1.0V –STD	V_{DD} = 1.0V –1	V_{DD} = 1.05V –STD	V_{DD} = 1.05V –1	Unit
Read access time	Tac	10	10	10	10	ns

4.4 Transceiver Switching Characteristics

This section describes transceiver switching characteristics.

© 2024 Microchip Technology Inc. and its subsidiaries

4.4.1 Transceiver Performance

The following table describes transceiver performance.

Table 4-32. RT PolarFire Transceiver and TxPLL Performance

Parameter	Symbol	STD Min	STD Typ	STD Max	–1 Min	–1 Typ	–1 Max	Unit
Tx data rate[1,2]	F_{TXRate}	0.25	—	10.3125	0.25	—	12.7	Gbps
Tx OOB (serializer bypass) data rate	$F_{TXRateOOB}$	DC	—	1.5	DC	—	1.5	Gbps
Rx data rate when AC coupled[2]	$F_{RxRateAC}$	0.25	—	10.3125	0.25	—	12.7	Gbps
Rx data rate when DC coupled	$F_{RxRateDC}$	0.25	—	3.2	0.25	—	3.2	Gbps
Rx OOB (deserializer bypass) data rate	$F_{TXRateOOB}$	DC	—	1.25	DC	—	1.25	Gbps
TxPLL output frequency[3]	F_{TXPLL}	1.6	—	5.1563	1.6	—	6.35	GHz
Rx CDR mode	F_{RXCDR}	0.25	—	10.3125	0.25	—	10.3125	Gbps
Rx DFE and CDR auto-calibration modes[2]	$F_{RXAUTOCAL}$	3.0	—	10.3125	3.0	—	12.7	Gbps
Rx Eye Monitor mode [2]	$F_{RXEyeMon}$	3.0	—	10.3125	3.0	—	12.7	Gbps
EQ far-end loopback data rate	$F_{EQFELPB}$	0.25	—	1.25	0.25	—	1.25	Gbps
EQ near-end loopback data rate	$F_{EQNELPB}$	0.25	—	10.3125	0.25	—	10.3125	Gbps
CDR far-end parallel loopback data rate[6]	$F_{CDRFELPB}$	0.00625[5]	—	312.5	—	—	312.5	MHz
PCS reset minimum pulse width	MPW_{PCS_RESET}	16	—	—	16	—	—	[Tx|Rx]_CLK Cycles[4]
PMA reset minimum pulse width	MPW_{PMA_RESET}	16	—	—	16	—	—	[Tx|Rx]_CLK Cycles[4]

1. The reference clock is required to be a minimum of 75 MHz for data rates of 10 Gbps and above.
2. In RTPF500ZT, V_{DDA} must be set to 1.05V mode for all data rates. In RTPF500T, V_{DDA} must be set to 1.05V mode for data rates greater than 10.3125 Gbps. See supply tolerance in Recommended Operating Conditions.
3. The Tx PLL rate is between 0.5x to 5.5x the Tx data rate. The Tx data rate depends on per XCVR lane Tx post-divider settings.
4. Minimum pulse width should reference TX_CLK when Tx only or both Tx and Rx are used. Reference RX_CLK if only Rx is used.
5. In 40-bit wide parallel mode.
6. The CDR far-end parallel loopback is clocked by the recovered clock of the CDR. The bandwidth of this loopback is equivalent to the clock multiplied by the data width.

4.4.2 Transceiver Reference Clock Performance

The following table describes performance of the transceiver reference clock.

Table 4-33. RT PolarFire Transceiver Reference Clock AC Requirements[8]

Parameter	Symbol	STD Min	STD Typ	STD Max	–1 Min	–1 Typ	–1 Max	Unit
Reference clock input rate[1, 2]	$F_{TXREFCLK}$	20	—	400	20	—	400	MHz
Reference clock input rate[1, 2, 3]	$F_{XCVRREFCLKMAX\ CASCADE}$	20	—	156.3	20	—	156.3	MHz

© 2024 Microchip Technology Inc. and its subsidiaries

.....continued

Parameter	Symbol	STD Min	STD Typ	STD Max	–1 Min	–1 Typ	–1 Max	Unit
Reference clock rate at the Tx PLL PFD[4]	$F_{TXREFCLKPFD}$	20	—	156.3	20	—	175	MHz
Reference clock rate recommended at the PFD for Tx rates 10 Gbps and above[4]	$F_{TXREFCLKPFD10G}$	75	—	156.3	75	—	175	MHz
Tx reference clock phase noise requirements to meet jitter specifications (156 MHz clock at reference clock input)[5]	$F_{TXREFPN}$	—	—	–110	—	—	–110	dBc/Hz
Phase noise at 10 KHz	$F_{TXREFPN}$	—	—	–110	—	—	–110	dBc/Hz
Phase noise at 100 KHz	$F_{TXREFPN}$	—	—	–115	—	—	–115	dBc/Hz
Phase noise at 1 MHz	$F_{TXREFPN}$	—	—	–135	—	—	–135	dBc/Hz
Reference clock input rise time (10%–90%)	$T_{REFRISE}$	—	200	500	—	200	500	ps
Reference clock input fall time (90%–10%)	$T_{REFFALL}$	—	200	500	—	200	500	ps
Reference clock rate at RX CDR	$F_{RXREFCLKCDR}$	20	—	156.3	20	—	156.3	MHz
Reference clock duty cycle	$T_{REFDUTY}$	40	—	60	40	—	60	%
Spread spectrum modulation spread[6]	Mod_Spread	0.1	—	3.1	0.1	—	3.1	%
Spread spectrum modulation frequency[7]	Mod_Freq	TxREF CLKPFD/ (128)	32	TxREF CLKPFD/ (128*63)	TxREF CLKPFD/ (128)	32	TxREF CLKPFD/ (128*63)	KHz

1. See the maximum reference clock rate allowed per input buffer standard.
2. The minimum value applies to this clock when used as an XCVR reference clock. It does not apply when used as a non-XCVR input buffer (DC input allowed).
3. Cascaded reference clock.
4. After reference clock input divider.
5. To calculate the $F_{TXREFPN}$ phase noise requirement at frequencies other than 156 MHz, use the following formula: $F_{TXREFPN}$ at f(MHz) = $F_{TXREFPN}$ at 156 MHz + 20*log(f/156)
6. Programmable capability for depth of down-spread or center-spread modulation.

© 2024 Microchip Technology Inc. and its subsidiaries

7. Programmable modulation rate based on the modulation divider setting (1 to 63).
8. If increased Tx total jitter is acceptable, the maximum reference clock input rise/fall times may be increased beyond the maximum shown in this table when using single-ended configurations (LVCMOS and LVTTL). Refer to Table 4-39 for total jitter specifications as a function of reference clock input rise/fall time.

4.4.3 Transceiver Reference Clock I/O Standards

The following differential I/O standards are supported as transceiver reference clocks.

- LVDS25/33
- HCLS25 (for PCIe)
- RSDS25/33
- MINILVDS25/33
- SUBLVDS25/33
- PPDS25/33
- SLVS25/33
- BUSLVDS25
- MLVDS25
- LVPECL33
- MIPI25

For DC input levels, see Differential DC Input and Output Levels.

The transceiver reference clock differential receiver supports V_{ICM} Common mode. If increased Tx total jitter is acceptable, the maximum reference clock input rise/fall times may be increased beyond the maximum specification shown in Table 4-33 when using single-ended configurations (LVCMOS and LVTTL). Refer toTable 4-39 for jitter specification as a function of reference clock input rise/fall time.

Note: The amount of jitter from the input receiver increases at Common modes of less 0.2V or greater than $XCVR_{VREF}$ –0.4V. Therefore, for improved SerDes operation, it is recommended that the V_{CM} of the signal into the SerDes reference clock input be at a minimum of 0.2V and below $XCVR_{VREF}$ –0.4V.

The following single-ended I/O standards are supported as transceiver reference clocks.

- LVTTL
- LVCMOS33
- LVCMOS25
- LVCMOS18
- SSTL25I/II
- SSTL18I/II
- HSUL18I/II

For DC input levels, see DC Input and Output Levels.

Note: Generally, Hysteresis = OFF is recommended. In extremely high noise systems with degraded reference clock input, Hysteresis = ON may improve results.

4.4.4 Transmitter Performance

The following tables describe performance of the transmitter.

© 2024 Microchip Technology Inc. and its subsidiaries

Table 4-34. Transceiver Reference Clock Input Termination

Parameter	Symbol	Min (%)	Typ (Ω)	Max (%)	Condition	Notes
Single-ended Thevenin termination	RefTerm	–40	50	+20	V_{DDI} = 1.8V/1.5V	Thevenin impedance is calculated based on independent P and N as measured at 50% of V_{DDI}. For 50Ω/75Ω/150Ω cases, the nearest supported values of 40Ω/60Ω/120Ω are used.
		–40	75	+20	V_{DDI} = 1.8V	
		–40	150	+20	V_{DDI} = 1.8V	
Differential termination	RefDiffTerm	–20	100[1]	+20	V_{ICM} < 0.8V	Measured across P to N with 400 mV bias. When V_{ICM} complies with more than one range, use the maximum percentage tolerance of the two ranges.
		–20	100	+40	0.6V < V_{ICM} < 1.65V	
		–20	100	+80	1.4V < V_{ICM}	
Power-up termination	–	–	>50K	–	–	–

1. Measured at V_{CM} = 1.2V and V_{ID} = 350 mV.

Note: All pull-ups are disabled at power-up to allow hot plug capability.

The following tables describe the RT PolarFire transceiver user interface clocks.

Note: Unless specified, all modes are non-deterministic. For more information, see the PolarFire Family Transceiver User Guide.

Table 4-35. Transceiver TX_CLK Range (Nondeterministic PCS Mode with Global or Regional Fabric Clocks)

Mode	STD Min	STD Max	–1 Min	–1 Max	Unit
8-bit, max data rate = 1.6 Gbps	—	200	—	200	MHz
10-bit, max data rate = 1.6 Gbps	—	160	—	160	MHz
16-bit, max data rate = 4.8 Gbps	—	300	—	300	MHz
20-bit, max data rate = 6.0 Gbps	—	300	—	300	MHz
32-bit, max data rate = 10.3125 Gbps (–STD) / 12.7 Gbps (–1)[1]	—	325	—	325	MHz
40-bit, max data rate = 10.3125 Gbps (–STD) / 12.7 Gbps (–1)[1]	—	260	—	320	MHz
64-bit, max data rate = 10.3125 Gbps (–STD) / 12.7 Gbps (–1)[1]	—	165	—	200	MHz
80-bit, max data rate = 10.3125 Gbps (–STD) / 12.7 Gbps (–1)[1]	—	130	—	160	MHz
Fabric pipe mode 32-bit, max data rate = 6.0 Gbps	—	150	—	150	MHz

1. In RTPF500ZT, V_{DDA} must be set to 1.05V mode for all data rates. In RTPF500T, V_{DDA} must be set to 1.05V mode for data rates greater than 10.3125 Gbps. See supply tolerance in Recommended Operating Conditions.

© 2024 Microchip Technology Inc. and its subsidiaries

Table 4-36. Transceiver RX_CLK Range (Non-Deterministic PCS Mode with Global or Regional Fabric Clocks)

Mode	STD Min	STD Max	–1 Min	–1 Max	Unit
8-bit, max data rate = 1.6 Gbps	—	200	—	200	MHz
10-bit, max data rate = 1.6 Gbps	—	160	—	160	MHz
16-bit, max data rate = 4.8 Gbps	—	300	—	300	MHz
20-bit, max data rate = 6.0 Gbps	—	300	—	300	MHz
32-bit, max data rate = 10.3125 Gbps	—	325	—	325	MHz
40-bit, max data rate = 10.3125 Gbps (–STD) / 12.7 Gbps (–1)[1]	—	260	—	320	MHz
64-bit, max data rate = 10.3125 Gbps (–STD) / 12.7 Gbps (–1)[1]	—	165	—	200	MHz
80-bit, max data rate = 10.3125 Gbps (–STD) / 12.7 Gbps (–1)[1]	—	130	—	160	MHz
Fabric pipe mode 32-bit, max data rate = 6.0 Gbps	—	150	—	150	MHz

1. In RTPF500ZT, V_{DDA} must be set to 1.05V mode for all data rates. In RTPF500T, V_{DDA} must be set to 1.05V mode for data rates greater than 10.3125 Gbps. See supply tolerance in Recommended Operating Conditions.

Table 4-37. Transceiver TX_CLK Range (Deterministic PCS Mode with Regional Fabric Clocks)

Mode	STD Min	STD Max	–1 Min	–1 Max	Unit
8-bit, max data rate = 1.6 Gbps	—	200	—	200	MHz
10-bit, max data rate = 1.6 Gbps	—	160	—	160	MHz
16-bit, max data rate = 3.6 Gbps (–STD) / 4.25 Gbps (–1)	—	225	—	266	MHz
20-bit, max data rate = 4.5 Gbps (–STD) / 5.32 Gbps (–1)	—	225	—	266	MHz
32-bit, max data rate = 7.2 Gbps (–STD) / 8.5 Gbps (–1)	—	225	—	266	MHz
40-bit, max data rate = 9.0 Gbps (–STD) / 10.6 Gbps (–1)[1]	—	225	—	266	Mhz
64-bit, max data rate = 10.3125 Gbps (–STD) / 12.7 Gbps (–1)[1]	—	165	—	200	MHz
80-bit, max data rate = 10.3125 Gbps (–STD) / 12.7 Gbps (–1)[1]	—	130	—	160	MHz

1. In RTPF500ZT, V_{DDA} must be set to 1.05V mode for all data rates. In RTPF500T, V_{DDA} must be set to 1.05V mode for data rates greater than 10.3125 Gbps. See supply tolerance in Recommended Operating Conditions.

Table 4-38. Transceiver RX_CLK Range (Deterministic PCS Mode with Regional Fabric Clocks)

Mode	STD Min	STD Max	–1 Min	–1 Max	Unit
8-bit, max data rate = 1.6 Gbps	—	200	—	200	MHz
10-bit, max data rate = 1.6 Gbps	—	160	—	160	MHz
16-bit, max data rate = 3.6 Gbps (–STD) / 4.25 Gbps (–1)	—	225	—	266	MHz
20-bit, max data rate = 4.5 Gbps (–STD) / 5.32 Gbps (–1)	—	225	—	266	MHz
32-bit, max data rate = 7.2 Gbps (–STD) / 8.5 Gbps (–1)	—	225	—	266	MHz
40-bit, max data rate = 9.0 Gbps (–STD) / 10.6 Gbps (–1)[1]	—	225	—	266	MHz
64-bit, max data rate = 10.3125 Gbps (–STD) / 12.7 Gbps (–1)[1]	—	165	—	200	MHz
80-bit, max data rate = 10.3125 Gbps (–STD) / 12.7 Gbps (–1)[1]	—	130	—	160	MHz

1. In RTPF500ZT, V_{DDA} must be set to 1.05V mode for all data rates. In RTPF500T, V_{DDA} must be set to 1.05V mode for data rates greater than 10.3125 Gbps. See supply tolerance in Recommended Operating Conditions.

© 2024 Microchip Technology Inc. and its subsidiaries

Table 4-39. RT PolarFire Transceiver Transmitter Characteristics[14]

Parameter	Symbol	Min	Typ	Max	Unit	Condition
Differential termination	V_{OTERM}	68	85	102	Ω	85Ω setting
	V_{OTERM}	80	100	120	Ω	100Ω setting
	V_{OTERM}	120	150	180	Ω	150Ω setting
Common mode voltage[1]	V_{OCM}	0.44 × V_{DDA}	0.525 × V_{DDA}	0.59 × V_{DDA}	V	DC coupled 50% setting
	V_{OCM}	0.52 × V_{DDA}	0.6 × V_{DDA}	0.66 × V_{DDA}	V	DC coupled 60% setting
	V_{OCM}	0.61 × V_{DDA}	0.7 × V_{DDA}	0.75 × V_{DDA}	V	DC coupled 70% setting
	V_{OCM}	0.63 × V_{DDA}	0.8 × V_{DDA}	0.83 × V_{DDA}	V	DC coupled 80% setting
Rise time[2]	T_{TxRF}	40	—	61	ps	20% to 80%
Fall time[2]		39	—	58	ps	80% to 20%
Differential peak-to-peak amplitude	V_{ODPP}	1080	1140	1320	mV	1000 mV setting
	V_{ODPP}	1010	1060	1220	mV	800 mV setting
	V_{ODPP}	550	580	670	mV	500 mV setting
	V_{ODPP}	465	490	560	mV	400 mV setting
	V_{ODPP}	350	370	425	mV	300 mV setting
	V_{ODPP}	250	260	300	mV	200 mV setting
	V_{ODPP}	150	160	185	mV	100 mV setting
Transmit lane P to N skew[3]	T_{OSKEW}	—	8	15	ps	—
Lane to lane transmit skew[4]	T_{LLSKEW}	—	—	75	ps	Single PLL, 2–4 bonded lanes, 8–40-bit fabric width[10]
		—	—	8	UI	Single PLL, 2–4 bonded lanes, 64–80-bit fabric width[11]
		—	—	8 + Refclk skew	UI	Multiple PLL, 2–4 bonded lanes, 8–40-bit fabric width[11, 12]
		—	—	32 + Refclk skew	UI	Multiple PLL, 2–4 bonded lanes, 64–80-bit fabric width[11, 12]
Electrical idle transition entry time[7]	TTxElTrEntry	—	—	20	ns	—
Electrical idle transition exit time[7]	TTxElTrExit	—	—	19	ns	—
Electrical idle amplitude	VTxElpp	—	—	7	mV	—
TXPLL lock time	T_{TXLock}	—	—	1600	PFD cycles	—
Digital PLL lock time[8]	$T_{DPLLLock}$	—	—	75,000	REFCLK UIs	Frequency lock
		—	—	150,000	REFCLK UIs	Phase lock
Total jitter[5, 6, 13] Deterministic jitter[5, 6]	T_J T_{DJ}	—	—	0.22 0.1	UI UI	Data rate ≥10.3125 Gbps to 12.7 Gbps[9] (Tx V_{CO} rate 5.16 GHz to 6.35 GHz) TxPLL in integer mode
Total jitter[5, 6, 13] Deterministic jitter[5, 6]	T_J T_{DJ}	—	—	0.28 0.1	UI UI	Data rate ≥10.3125 to 12.7 Gbps[9] (Tx V_{CO} rate 5.16 GHz to 6.35 GHz) TxPLL in fractional mode

© 2024 Microchip Technology Inc. and its subsidiaries

.....continued

Parameter	Symbol	Min	Typ	Max	Unit	Condition
Total jitter[5, 6, 13] Deterministic jitter[5, 6]	T_J T_{DJ}	—	—	0.22 0.09	UI UI	Data rate ≥8.5 Gbps to 10.3125 Gbps (Tx V_{CO} rate 4.25 GHz to 5.16 GHz) TxPLL in integer mode
Total jitter[5, 6, 13] Deterministic jitter[5, 6]	T_J T_{DJ}	—	—	0.28 0.09	UI UI	Data rate ≥8.5 Gbps to 10.3125 Gbps (Tx V_{CO} rate 4.25 GHz to 5.16 GHz) TxPLL in fractional mode
Total jitter[5, 6, 13] Deterministic jitter[5,6]	T_J T_{DJ}	—	—	0.21 0.09	UI UI	Data rate ≥5.0 Gbps to 8.5 Gbps (Tx V_{CO} rate 2.5 GHz to 4.25 GHz) TxPLL in integer mode
Total jitter[5, 6, 13] Deterministic jitter[5, 6]	T_J T_{DJ}	—	—	0.25 0.09	UI UI	Data rate ≥5.0 Gbps to 8.5 Gbps (Tx V_{CO} rate 2.5 GHz to 4.25 GHz) TxPLL in fractional mode
Total jitter[5, 6, 13] Deterministic jitter[5, 6]	T_J T_{DJ}	—	—	0.17 0.03	UI UI	Data rate ≥1.6 Gbps to 5.0 Gbps (Tx V_{CO} rate 1.6 GHz to 2.5 GHz) TxPLL in integer mode
Total jitter[5, 6, 13] Deterministic jitter[5, 6]	T_J T_{DJ}	—	—	0.2 0.03	UI UI	Data rate ≥1.6 Gbps to 5.0 Gbps (Tx V_{CO} rate 1.6 GHz to 2.5 GHz) TxPLL in fractional mode
Total jitter[5, 6, 13] Deterministic jitter[5, 6]	T_J T_{DJ}	—	—	0.08 0.02	UI UI	Data rate ≥ 800 Mbps to 1.6 Gbps (Tx V_{CO} rate 1.6 GHz) TxPLL in integer mode
Total jitter[5, 6, 13] Deterministic jitter[5, 6]	T_J T_{DJ}	—	—	0.11 0.02	UI UI	Data rate ≥ 800 Mbps to 1.6 Gbps (Tx V_{CO} rate 1.6 GHz) TxPLL in fractional mode
Total jitter[5, 6, 13] Deterministic jitter[5, 6]	T_J T_{DJ}	—	—	0.05 0.01	UI UI	Data rate = 250 Mbps to 800 Mbps (Tx V_{CO} rate 1.48 GHz to 1.6 GHz) TxPLL in integer mode
Total jitter[5, 6, 13] Deterministic jitter[5, 6]	T_J T_{DJ}	—	—	0.06 0.01	UI UI	Data rate = 250 Mbps to 800 Mbps (Tx V_{CO} rate 1.48 GHz to 1.6 GHz) TxPLL in fractional mode

1. Increased DC Common mode settings above 50% reduce allowed V_{OD} output swing capabilities.
2. Adjustable through transmit emphasis.
3. With estimated package differences.
4. Single PLL applies to all four lanes in the same quad location with the same TxPLL. Multiple PLL applies to N lanes using multiple TxPLLs from different quad locations.
5. Improved jitter characteristics for a specific industry standard are possible in many cases due to improved reference clock or higher V_{CO} rate used.
6. Tx jitter is specified with all transmitters on the device enabled, a 10^{-12}-bit error rate (BER) and Tx data pattern of PRBS7.
7. From the PMA mode, the TX_ELEC_IDLE port to the XVCR TXP/N pins.
8. FTxRefClk = 75 MHz with typical settings.

© 2024 Microchip Technology Inc. and its subsidiaries

9. In RTPF500ZT, V_{DDA} must be set to 1.05V mode for all data rates. In RTPF500T, V_{DDA} must be set to 1.05V mode for data rates greater than 10.3125 Gbps. See supply tolerance in Recommended Operating Conditions.
10. Transmit alignment in this case will automatically align upon the Tx PLL obtaining lock. For details on transmit alignment, see PolarFire Family Transceiver User Guide.
11. In order to obtain the required alignment for these configurations, an FPGA fabric Tx alignment circuit must be implemented. For details on transmit alignment, see PolarFire Family Transceiver User Guide.
12. Refclk skew is the amount of skew between the reference clocks of the two PLL.
13. Jitter decomposition can be found in the protocol characterization reports.
14. Tx total jitter (Tj) is quoted for reference clock rise and fall times as specified in Table 4-33. If increased Tj is acceptable, the maximum reference clock input rise/fall times may be increased beyond the maximum specification shown in Table 4-33 when using single-ended configurations (LVCMOS and LVTTL).
    a. Tj increases by 8% for 0.5 ns < T_{RISE}/T_{FALL} ≤ 2.0 ns
    b. Tj increases by 25% for 2.0 ns < T_{RISE}/T_{FALL} ≤ 5.0 ns
    c. Tj increases by 35% for 0.5 ns < T_{RISE}/T_{FALL} ≤ 5.0 ns

4.4.5 Receiver Performance

The following table describes performance of the receiver.

Table 4-40. RT PolarFire Transceiver Receiver Characteristics

Parameter	Symbol	Min	Typ	Max	Unit	Condition
Input voltage range	V_{IN}	0	—	V_{DDA} + 0.3	V	—
Differential peak-to-peak amplitude	V_{IDPP}	140	—	1250	mV	—
Differential termination	V_{ITERM}	68	85	102	Ω	85Ω setting
		80	100	120	Ω	100Ω setting
		120	150	180	Ω	150Ω setting
Common mode voltage[1]	V_{ICMDC}	0.7 × V_{DDA}	—	0.9 × V_{DDA}	V	DC coupled
Exit electrical idle detection time	T_{EIDET}	—	50	100	ns	—
Run length of consecutive identical digits (CID)	C_{ID}	—	—	200	UI	—
CDR frequency tolerance[2]	F_{LRTOL}	–11700	—	+11700	ppm of line rate	Enhanced Receiver Management is disabled [14]

© 2024 Microchip Technology Inc. and its subsidiaries

.....continued

Parameter	Symbol	Min	Typ	Max	Unit	Condition
CDR lock-to-data time[13]	T_{LTD}	512 * CDR_{REFDIV}	—	1024 * CDR_{REFDIV}	CDR_{REFCLK} cycles	Enhanced Receiver Management is disabled[14]
		(1900/T_{CDRREF}) + (512 + (1020 * ($W_{XCVRFABRX}$/CDR_{FBDIV})) * CDR_{REFDIV})	—	(5200/T_{CDRREF}) + (1024 + (6380 * ($W_{XCVRFABRX}$/CDR_{FBDIV})) * CDR_{REFDIV})	CDR_{REFCLK} cycles	Enhanced Receiver Management is enabled [14]
CDR lock-to-ref time[13]	T_{LTF}	(1000/T_{CDRREF}) + (1024 * CDR_{REFDIV})	—	(13000/T_{CDRREF}) + (1536 * CDR_{REFDIV})	CDR_{REFCLK} cycles	—
High-gain lock time	T_{HGLT}	10.8	—	—	ns	For Burst Mode Receiver (BMR)
High-gain state time[12]	$T_{HGSTATE}$	—	—	3264	ns	For Burst Mode Receiver (BMR)
Loss-of-signal detect (peak detect range setting= high)[9,10]	$V_{DETHIGH}$	145	—	295	mV	Setting = 3
		155	—	340	mV	Setting = 4
		180	—	365	mV	Setting = 5
		195	—	375	mV	Setting = 6
		210	—	385	mV	Setting = 7
Loss-of-signal detect (peak detect range setting= low)[9,10]	V_{DETLOW}	65	—	175	mV	Setting = PCIe[3, 7]
		95	—	190	mV	Setting = SATA[4, 8]
		75	—	170	mV	Setting = 1
		95	—	185	mV	Setting = 2
		100	—	190	mV	Setting = 3
		140	—	210	mV	Setting = 4
		155	—	240	mV	Setting = 5
		165	—	245	mV	Setting = 6
		170	—	250	mV	Setting = 7
Sinusoidal jitter tolerance	T_{SJTOL}	0.34	—	—	UI	>8.5 Gbps –12.7 Gbps[5, 11]
		0.43	—	—	UI	>8.0–8.5 Gbps[5]
		0.45	—	—	UI	>3.2–8.0 Gbps[5]
		0.45	—	—	UI	>1.6 to 3.2 Gbps[5]
		0.42	—	—	UI	>0.8 to 1.6 Gbps[5]
		0.41	—	—	UI	250 to 800 Mbps[5]
Total jitter tolerance with stressed eye	$T_{TJTOLSE}$	0.65	—	—	UI	3.125 Gbps[5]
		0.65	—	—	UI	6.25 Gbps[6]
		0.7	—	—	UI	10.3125 Gbps[6]
		0.7	—	—	UI	12.7 Gbps[6, 11]

© 2024 Microchip Technology Inc. and its subsidiaries

.....continued

Parameter	Symbol	Min	Typ	Max	Unit	Condition
Sinusoidal jitter tolerance with stressed eye	$T_{SJTOLSE}$	0.1	—	—	UI	3.125 Gbps[5]
		0.05	—	—	UI	6.25 Gbps[6]
		0.05	—	—	UI	10.3125 Gbps[6]
		0.05	—	—	UI	12.7 Gbps[6, 11]
CTLE DC gain (all stages, max settings)	—	0.1	—	10	dB	—
CTLE AC gain (all stages, max settings)	—	0.05	—	16	dB	—
DFE AC gain (per 5 stages, max settings)	—	0.05	—	7.5	dB	—
Auto adaptive calibration time (CTLE)	T_{CTLE}	12	—	45	ms	—
Auto adaptive calibration time (CTLE+DFE)	$T_{CTLE+DFE}$	—	1.4	—	s	—
Enhanced receiver management control clock input (CTRL_CLK)	$F_{ERMCTRLCLK}$	38.4	40	41.6	MHz	—

1. Valid at 3.2 Gbps and below.
2. Data vs Rx reference clock frequency.
3. Achieves compliance with PCIe electrical idle detection.
4. Achieves compliance with SATA OOB specification.
5. Rx jitter values based on Bit Error Ratio (BER) of 10–12, AC-coupled input with 400 mV V_{ID}, all stages of Rx CTLE enabled, DFE disabled, 80 MHz sinusoidal jitter injected to Rx data.
6. Rx jitter values based on Bit Error Ratio (BER) of 10–12, AC-coupled input with 400 mV V_{ID}, all stages of Rx CTLE enabled, DFE enabled, 80 MHz sinusoidal jitter injected to Rx data.
7. For PCIe: Low Threshold Setting = 0, High Threshold Setting = 2.
8. For SATA: Low Threshold Setting = 2, High Threshold Setting = 3.
9. Loss of signal is valid for data rates of 1 Gbps to 5 Gbps for PRBS7 (8B/10B) or PRBS31 (64b/6xb) data formats. It is also valid for detection of SATA out-of-band signals at data rates up to 6 Gbps. If the default settings for the low threshold (0x0) and high threshold (0x2) using the low range option for the peak detector are used, then the Rx $V_{Amplitude}$ pk-pk (outside of data eye) at the receiver input package pins must be a minimum of 300 mV for short reach (6.5 dB insertion loss at 5 GHz) applications, 350 mV for medium reach (17.0 dB insertion loss at 5 GHz) applications, and 450 mV for long reach (25.0 dB insertion loss at 5 GHz) applications—generally the settings are less limiting than what is required for good BER operation of the SerDes. Note that if the option to force CDR Lock2Ref upon Rx Idle is set (default at data rates of 5 Gbps and below), this minimum $V_{Amplitude}$ pk-pk must be enforced for proper CDR operation.
10. Detect values measured at 1.5 Gbps with PRBS7 data pattern.

© 2024 Microchip Technology Inc. and its subsidiaries

11. In RTPF500ZT, V_{DDA} must be set to 1.05V mode for all data rates. In RTPF500T, V_{DDA} must be set to 1.05V mode for data rates greater than 10.3125 Gbps. See supply tolerancein Recommended Operating Conditions.
12. $T_{HGSTATE}$ is based on the condition where the CDR was in lock (to reference or data) for at least 5.2 µs before moving to the high-gain state. At this point, if the receive data is outside the ppm tolerance of the CDR, the CDR will unlock after the time specified by the parameter.
13. The following definitions apply:
    a. T_{CDRREF} is the transceiver CDR reference clock period in nanoseconds.
    b. $W_{XCVRFABRX}$ is the parallel interface width of the transceiver receive fabric interface.
    c. CDR_{FBDIV} is the feedback divider of the transceiver.
    d. $CDR_{CDRREFDIV}$ is the reference divider of the transceiver CDR.
14. For details on the Enhanced Receiver Management feature, refer to the PolarFire Family Transceiver User Guide.

4.4.6 Transceiver and Receiver Return Loss Characteristics

This section describes transmitter and receiver return loss characteristics compliant with OIF-CEI-03.1.

Figure 4-7. Differential Return Loss

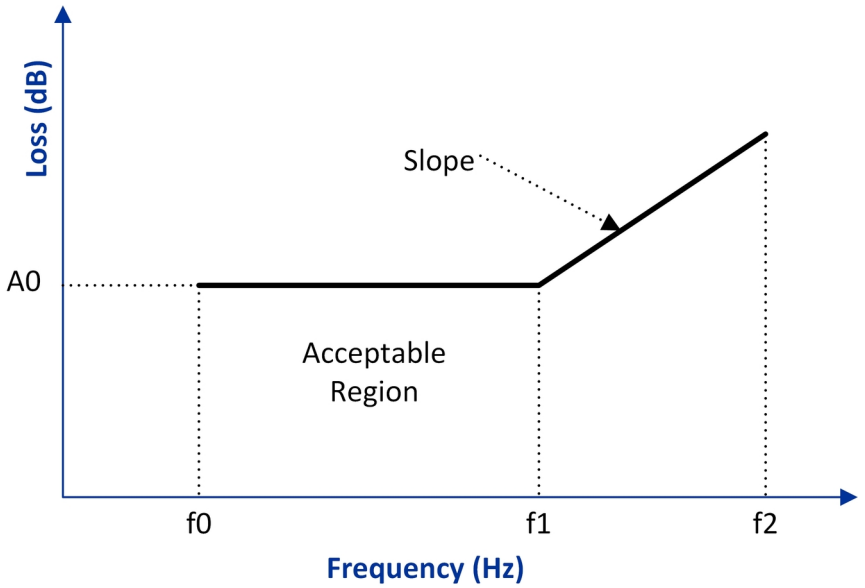

Table 4-41. Differential Return Loss

Parameter	Value	Unit
A0	–8	dB
f0	100	MHz
f1	(3/4) * T_Baud	Hz
f2	T_Baud	Hz
Slope	16.6	dB/dec

© 2024 Microchip Technology Inc. and its subsidiaries

Figure 4-8. Common Mode Return Loss

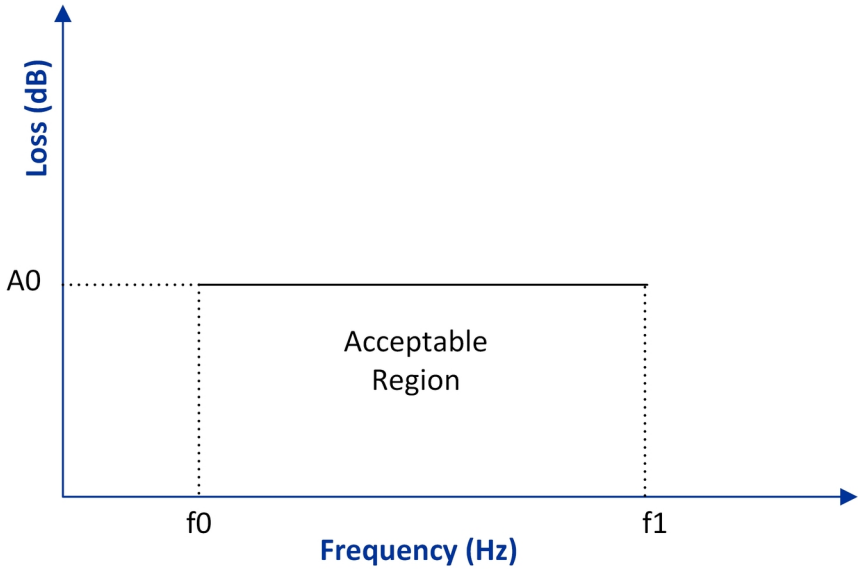

Table 4-42. Common Mode Return Loss

Parameter	Value	Unit
A0	–6	dB
f0	100	MHz
f1	(3/4) * T_Baud	Hz

4.5 Transceiver Protocol Characteristics

The following section describes transceiver protocol characteristics.

4.5.1 PCI Express

The following tables describe the PCI express.

Table 4-43. PCI Express Gen 1

Parameter	Data Rate[1, 2]	Min	Max	Unit
Total transmit jitter	2.5 Gbps	—	0.25	UI
Receiver jitter tolerance	2.5 Gbps	0.4	—	UI

1. In RTPF500ZT, V_{DDA} must be set to 1.05V mode for all data rates. See supply tolerance in Recommended Operating Conditions.
2. With add-in card, as specified in PCI Express CEM Rev 2.0.

Table 4-44. PCI Express Gen 2

Parameter	Data Rate[1, 2]	Min	Max	Unit
Total transmit jitter	5.0 Gbps	—	0.35	UI
Receiver jitter tolerance	5.0 Gbps	0.4	—	UI

1. In RTPF500ZT, V_{DDA} must be set to 1.05V mode for all data rates. See supply tolerance in Recommended Operating Conditions.

© 2024 Microchip Technology Inc. and its subsidiaries

2. With add-in card as specified in PCI Express CEM Rev 2.0.

4.5.2 Interlaken

The following table describes Interlaken.

Table 4-45. Interlaken

Parameter	Data Rate[1]	Min	Max	Unit
Total transmit jitter	6.375 Gbps	—	0.3	UI
	10.3125 Gbps	—	0.3	UI
	12.7 Gbps[2]	—	0.3	UI
Receiver jitter tolerance	6.375 Gbps	0.6	—	UI
	10.3125 Gbps	0.65	—	UI
	12.7 Gbps[2]	0.65	—	UI

1. In RTPF500ZT, V_{DDA} must be set to 1.05V mode for all data rates. In RTPF500T, V_{DDA} must be set to 1.05V mode for data rates greater than 10.3125 Gbps. See supply tolerance in Recommended Operating Conditions.
2. Supported on –1 speed grade only.

4.5.3 10GbE (10GBASE-R and 10GBASE-KR)

The following table describes 10GbE (10GBASE-R).

Table 4-46. 10GbE (10GBASE-R)

Parameter	Data Rate[1]	Min	Max	Unit
Total transmit jitter	10.3125 Gbps	—	0.28	UI
Receiver jitter tolerance	10.3125 Gbps	0.7	—	UI

1. In RTPF500ZT, V_{DDA} must be set to 1.05V mode for all data rates. See supply tolerance in Recommended Operating Conditions.

The following table describes 10GbE (10GBASE-KR).

Table 4-47. 10GbE (10GBASE-KR)

Parameter	Data Rate[1]	Min	Max	Unit
Total transmit jitter	10.3125 Gbps	—	0.28	UI
Receiver jitter tolerance (SJ)	10.3125 Gbps	0.115	—	UI
Receiver jitter tolerance (RJ)	10.3125 Gbps	0.13	—	UI
Receiver jitter tolerance (DCD)	10.3125 Gbps	0.035	—	UI

1. In RTPF500ZT, V_{DDA} must be set to 1.05V mode for all data rates. See supply tolerance in Recommended Operating Conditions.

The following table describes 10GbE (XAUI).

Table 4-48. 10GbE (XAUI)

Parameter	Data Rate[1]	Min	Max	Unit
Total transmit jitter (near end)	3.125 Gbps	—	0.35	UI
Total transmit jitter (far end)	—	—	0.55	UI

© 2024 Microchip Technology Inc. and its subsidiaries

.....continued				
Parameter	**Data Rate[1]**	**Min**	**Max**	**Unit**
Receiver jitter tolerance	3.125 Gbps	0.65	—	UI

1. In RTPF500ZT, V_{DDA} must be set to 1.05V mode for all data rates. See supply tolerance in Recommended Operating Conditions.

The following table describes 10GbE (RXAUI).

Table 4-49. 10GbE (RXAUI)

Parameter	Data Rate[1]	Min	Max	Unit
Total transmit jitter (near-end)	6.25 Gbps	—	0.35	UI
Total transmit jitter (far-end)	6.25 Gbps	—	0.55	UI
Receiver jitter tolerance	6.25 Gbps	0.65	—	UI

1. In RTPF500ZT, V_{DDA} must be set to 1.05V mode for all data rates. See supply tolerance in Recommended Operating Conditions.

4.5.4 1GbE (1000BASE-X)

The following table describes 1GbE (1000BASE-X).

Table 4-50. 1GbE (1000BASE-X)

Parameter	Data Rate [1]	Min	Max	Unit
Total transmit jitter	1.25 Gbps	—	0.24	UI
Receiver jitter tolerance	1.25 Gbps	0.749	—	UI

1. In RTPF500ZT, V_{DDA} must be set to 1.05V mode for all data rates. See supply tolerance in Recommended Operating Conditions.

4.5.5 SGMII and QSGMII

The following table describes SGMII.

Table 4-51. SGMII

Parameter	Data Rate[1]	Min	Max	Unit
Total transmit jitter	1.25 Gbps	—	0.24	UI
Receiver jitter tolerance	1.25 Gbps	0.749	—	UI

1. In RTPF500ZT, V_{DDA} must be set to 1.05V mode for all data rates. See supply tolerance in Recommended Operating Conditions.

The following table describes QSGMII.

Table 4-52. QSGMII

Parameter	Data Rate[1]	Min	Max	Unit
Total transmit jitter	5.0 Gbps	—	0.3	UI
Receiver jitter tolerance	5.0 Gbps	0.65	—	UI

1. In RTPF500ZT, V_{DDA} must be set to 1.05V mode for all data rates. See supply tolerance in Recommended Operating Conditions.

© 2024 Microchip Technology Inc. and its subsidiaries

4.5.6 CPRI

The following table describes CPRI.

Table 4-53. CPRI

Parameter	Data Rate[1]	Min	Max	Unit
Total transmit jitter	0.6144 Gbps	—	0.35	UI
	1.2288 Gbps	—	0.35	UI
	2.4576 Gbps	—	0.35	UI
	3.0720 Gbps	—	0.35	UI
	4.9152 Gbps	—	0.3	UI
	6.1440 Gbps	—	0.3	UI
	8.11008 Gbps	—	0.335	UI
	9.8304 Gbps	—	0.335	UI
Receive jitter tolerance	0.6144 Gbps	0.75	—	UI
	1.2288 Gbps	0.75	—	UI
	2.4576 Gbps	0.75	—	UI
	3.0720 Gbps	0.75	—	UI
	4.9152 Gbps	0.7	—	UI
	6.1440 Gbps	0.7	—	UI
	8.11008 Gbps	0.7	—	UI
	9.8304 Gbps	0.7	—	UI

1. In RTPF500ZT, V_{DDA} must be set to 1.05V mode for all data rates. See supply tolerance in Recommended Operating Conditions.

4.5.7 JESD204B

The following table describes JESD204B.

Table 4-54. JESD204B

Parameter	Data Rate [1]	Min	Max	Unit
Total transmit jitter	3.125 Gbps	—	0.35	UI
	6.25 Gbps	—	0.3	UI
	12.5 Gbps[2]	—	0.3	UI
Receive jitter tolerance	3.125 Gbps	0.56	—	UI
	6.25 Gbps	0.6	—	UI
	12.5 Gbps[2]	0.7	—	UI

1. In RTPF500ZT, V_{DDA} must be set to 1.05V mode for all data rates. In RTPF500T, V_{DDA} must be set to 1.05V mode for data rates greater than 10.3125 Gbps. See supply tolerance in Recommended Operating Conditions.
2. Supported on –1 speed grade only.

4.5.8 Display Port

The following table describes Display Port.

© 2024 Microchip Technology Inc. and its subsidiaries

Table 4-55. Display Port

Parameter	Data Rate[1]	Condition	Min	Max	Unit
Total transmit jitter	1.62 Gbps	Test point: TP2	—	0.27	UI
	2.7 Gbps	Test point: TP2	—	0.42	UI
	5.4 Gbps	Test point: TP3_EQ	—	0.62[2]	UI
	8.1 Gbps	Test point: TP3_CTLE	—	0.47	UI
Total receive jitter tolerance	1.62 Gbps	SJ at 20 MHz	0.747	—	UI
	2.7 Gbps	SJ at 100 MHz	0.491	—	UI
	5.4 Gbps	SJ at 10 MHz	0.636	—	UI
		SJ at 100 MHz	0.62	—	UI
	8.1 Gbps	SJ at 15 MHz	0.62	—	UI

1. In RTPF500ZT, V_{DDA} must be set to 1.05V mode for all data rates. See supply tolerance in Recommended Operating Conditions.
2. Total transmit jitter includes 0.04 UI from cable crosstalk effect.

4.5.9 Serial RapidIO

The following table describes Serial RapidIO.

Table 4-56. Serial RapidIO

Parameter	Data Rate[1]	Condition	Min	Max	Unit
Total transmit jitter	1.25 Gbps	—	—	0.35	UI
	2.5 Gbps	—	—	0.35	UI
	3.125 Gbps	—	—	0.35	UI
	5.0 Gbps	—	—	0.3	UI
	6.25 Gbps	—	—	0.3	UI
	10.3125 Gbps	—	—	0.28	UI
Receive jitter tolerance	1.25 Gbps	—	0.65	—	UI
	2.5 Gbps	—	0.65	—	UI
	3.125 Gbps	—	0.65	—	UI
	5.0 Gbps	Short reach	0.6	—	UI
		Long reach	0.95	—	UI
	6.25 Gbps	Short reach	0.6	—	UI
		Long reach	0.95	—	UI
	10.3125 Gbps	Short reach	0.62	—	UI

1. In RTPF500ZT, V_{DDA} must be set to 1.05V mode for all data rates. See supply tolerance in Recommended Operating Conditions.

© 2024 Microchip Technology Inc. and its subsidiaries

4.5.10 SDI

The following table describes SDI.

Table 4-57. SDI

Parameter	Data Rate[1]	Condition	Min	Max	Unit
Total transmit jitter	270 Mbps	Timing jitter (10 Hz–27 MHz)	—	0.2	UI
		Alignment jitter (1 KHz–27 MHz)	—	0.2	UI
	1.485 Gbps	Timing jitter (10 Hz–148.5 MHz)	—	1.0	UI
		Alignment jitter (100 KHz–148.5 MHz)	—	0.2	UI
	2.97 Gbps	Timing jitter (10 Hz–297 MHz)	—	2.0	UI
		Alignment jitter (100 KHz–297 MHz)	—	0.3	UI
	5.94 Gbps	Timing jitter (10 Hz–594 MHz)	—	2.0	UI
		Alignment jitter (100 KHz–594 MHz)	—	0.3	UI
	11.88 Gbps	Timing jitter (10 Hz–1188 MHz)	—	2.0	UI
		Alignment jitter (100 KHz–1188 MHz)	—	0.3	UI
Receive jitter tolerance	270 Mbps	Alignment jitter	0.2	—	UI
	1.485 Gbps	Alignment jitter	0.2	—	UI
	2.97 Gbps	Alignment jitter	0.3	—	UI
	5.94 Gbps	Alignment jitter	0.3	—	UI
	11.88 Gbps	Alignment jitter	0.3	—	UI

1. In RTPF500ZT, V_{DDA} must be set to 1.05V mode for all data rates. See supply tolerance in Recommended Operating Conditions.

4.5.11 OTN

The following table describes OTN.

Table 4-58. OTN

Parameter	Data Rate[1]	Condition	Min	Max	Unit
Total transmit jitter	2.66 Gbps	3 dB BW: 5 KHz to 20 MHz	—	0.3	UI
		3 dB BW: 1 MHz to 20 MHz	—	0.1	UI
	10.70 Gbps[2]	3 dB BW: 20 KHz to 80 MHz	—	0.3	UI
		3 dB BW: 4 MHz to 80 MHz	—	0.1	UI
	11.09 Gbps	3 dB BW: 20 KHz to 80 MHz	—	0.3	UI
		3 dB BW: 4 MHz to 80 MHz	—	0.1	UI

© 2024 Microchip Technology Inc. and its subsidiaries

.....continued					
Parameter	**Data Rate[1]**	**Condition**	**Min**	**Max**	**Unit**
Receive jitter tolerance	2.66 Mbps	SJ at 5 KHz	1.5	—	UI
		SJ at 20 MHz	0.15	—	UI
	10.70 Gbps[2]	SJ at 20 KHz	1.5	—	UI
		SJ at 80 MHz	0.15	—	UI
	11.09 Gbps[2]	SJ at 20 KHz	1.5	—	UI
		SJ at 80 MHz	0.15	—	UI

1. In RTPF500ZT, V_{DDA} must be set to 1.05V mode for all data rates. In RTPF500T, V_{DDA} must be set to 1.05V mode for data rates greater than 10.3125 Gbps. See supply tolerance in Recommended Operating Conditions.
2. Supported on –1 speed grade only.

4.5.12 Fiber Channel

The following table describes Fiber Channel.

Table 4-59. Fiber Channel

Parameter	Data Rate[1]	Condition	Min	Max	Unit
Total transmit jitter	1.0625 Gbps	—	—	0.23	UI
	2.125 Gbps	—	—	0.33	UI
	4.25 Gbps	—	—	0.52	UI
	8.5 Gbps	—	—	0.31	UI
Receive jitter tolerance	1.0625 Gbps	0.68	—	—	UI
	2.125 Gbps	0.62	—	—	UI
	4.24 Gbps	0.62	—	—	UI
	8.5 Gbps	0.71	—	—	UI

1. In RTPF500ZT, V_{DDA} must be set to 1.05V mode for all data rates. See supply tolerance in Recommended Operating Conditions.

4.5.13 HiGig and HiGig+

The following table describes HiGig and HiGig+.

Table 4-60. HiGig and HiGig+

Parameter	Data Rate[1]	Condition	Min	Max	Unit
Total transmit jitter	3.75 Gbps	Near-end	—	0.35	UI
	3.75 Gbps	Far-end	—	0.55	UI
Receive jitter tolerance	3.75 Gbps	—	0.65	—	UI

1. In RTPF500ZT, V_{DDA} must be set to 1.05V mode for all data rates. See supply tolerance in Recommended Operating Conditions.

4.5.14 HiGig II

The following table describes HiGig II.

© 2024 Microchip Technology Inc. and its subsidiaries

Table 4-61. HiGig II

Parameter	Data Rate[1]	Condition	Min	Max	Unit
Total transmit jitter	6.875 Gbps	Near-end	—	0.35	UI
	6.875 Gbps	Far-end	—	0.55	UI
Receive jitter tolerance	6.875 Gbps	—	0.65	—	UI

1. In RTPF500ZT, V_{DDA} must be set to 1.05V mode for all data rates. See supply tolerance in Recommended Operating Conditions.

4.5.15 FireWire IEEE® 1394

The following table describes FireWire IEEE® 1394.

Table 4-62. FireWire IEEE® 1394

Parameter	Data Rate[1]	Condition	Min	Max	Unit
Total transmit jitter	196.608 Mbps	S200 Near-end[2]	—	200	ps
	393.22 Mbps	S400 Near-end[3]	—	516	ps
	786.43 Mbps	S800 Near-end[3, 4]	—	200	ps
Receive jitter tolerance	196.608 Mbps	S200[2]	500	—	ps
	393.22 Mbps	S400[3]	1025	—	ps
	786.43 Mbps	S800[3]	375	—	ps

1. In RTPF500ZT, V_{DDA} must be set to 1.05V mode for all data rates. See supply tolerance in Recommended Operating Conditions.
2. DS mode.
3. Beta mode.
4. PolarFire complies with 1394 S800 electrical requirements with the exception of Tx eye requirement. Refer to the FireWire characterization report on the PolarFire documentation page for more details.

4.6 Non-Volatile Characteristics

The following section describes non-volatile characteristics.

4.6.1 FPGA and µPROM Programming Cycle and Retention

The following table describes FPGA and µPROM programming cycle and retention characteristics. Programming, zeroization, and verify operations all count as a programming cycle.

Retention characteristics at the absolute maximum junction temperature of 125 °C can be profiled using the PolarFire Retention Calculator, which can be obtained through technical support at www.microchip.com/support.

Table 4-63. FPGA and µPROM Programming Cycles vs. Retention Characteristics[1]

Programming T_J	Programming Cycles, Max	Retention Years	Retention Years at T_J
0 °C to 85 °C	1000	20	85 °C
0 °C to 100 °C	500	20	100 °C
–20 °C to 100 °C	500	20	100 °C
–40 °C to 100 °C	500	20	100 °C
–40 °C to 85 °C	1000	16	100 °C
–40 °C to 55 °C	2000	12	100 °C

© 2024 Microchip Technology Inc. and its subsidiaries

.....continued			
Programming T_J	Programming Cycles, Max	Retention Years	Retention Years at T_J
–40 °C to 100 °C	500	20	100 °C
–40 °C to 100 °C	500	10	110 °C
–40 °C to 100 °C	500	Note 2	125 °C

Notes:

1. Power supplied to the device must be valid during programming operations such as programming and verify. Programming recovery mode is available only for in-application programming mode and requires an external SPI Flash.
2. Contact technical support at www.microchip.com/support.

4.6.2 FPGA Programming Time

The following tables describe FPGA programming time. For allowable programming junction temperature (T_J), see Table 4-63.

Table 4-64. SPI Initiator and Auto-Update Programming Time (IAP)

Parameter	Symbol	Devices	Typ	Max	Unit
Programming time	T_{PROG}	RTPF500T, TL, TS, TLS	31	37	s

Table 4-65. SPI Target Programming Time[2]

Parameter	Symbol	Devices	Typ	Max	Unit
Programming time	T_{PROG}	RTPF500T, TL, TS, TLS[1]	90	108	s

1. SmartFusion2 as SPI Initiator with MSS running at 100 MHz, MSS_SPI_0 port running at 6.67 MHz. Bitstream stored in DDR. DirectC version 4.1.
2. Programmer: FlashPro5 with TCK 10 MHz. PC Configuration: Intel i7 at 3.6 GHz, 32 GB RAM, Windows 10.

Table 4-66. JTAG Programming Time

Parameter	Symbol	Devices	Typ	Max	Unit
Programming time	T_{PROG}	RTPF500T, TL, TS, TLS[1]	122	147	s

1. Programmer: FlashPro5 with TCK 10 MHz. PC Configuration: Intel i7 at 3.6 GHz, 32 GB RAM, Windows 10.

4.6.3 FPGA Bitstream Sizes

The following table describes FPGA bitstream sizes.

Table 4-67. Initialization Client Sizes

Device	Plaintext	Ciphertext
RTPF500T, TL, TS, TLS	6835 KB	7045 KB

Note: Worst case initializing all fabric LSRAM, USRAM, and UPROM.

© 2024 Microchip Technology Inc. and its subsidiaries

Table 4-68. Bitstream Sizes

File	Devices	FPGA	Security	SNVM (all pages)	FPGA+ SNVM	FPGA+ Sec	SNVM+ Sec	FPGA+ SNVM+ Sec
SPI	RTPF500T, TL, TS, TLS	14.3 MB	3.5 KB	59.7 KB	14.4 MB	14.3 MB	62.2 KB	14.4 MB
DAT	RTPF500T, TL, TS, TLS	14.3 MB	7.6 KB	61.2 KB	14.4 MB	14.3 MB	66.3 KB	14.4 MB

4.6.4 Digest Cycles

Digests verify the integrity of the programmed non-volatile data. Digests are a cryptographic hash of various data areas. Any digest that reports back an error raises the digest tamper flag. Digests are operational only from –40 °C to 100 °C.

Table 4-69. Maximum Number of Digest Cycles

Retention Since Programmed (N = Number Digests During that Time)[1]									
Storage and Operating T_J	N ≤300	N = 500	N = 1000	N = 1500	N = 2000	N = 4000	N = 6000	Unit	Retention
–40 to 100	20 × LF	17 × LF	12 × LF	10 × LF	8 × LF	4 × LF	2 × LF	°C	Years
0 to 100	20 × LF	17 × LF	12 × LF	10 × LF	8 × LF	4 × LF	2 × LF	°C	Years
–40 to 85	20 × LF	20 × LF	20 × LF	20 × LF	16 × LF	8 × LF	4 × LF	°C	Years
–40 to 55	20 × LF	20 × LF	20 × LF	20 × LF	20 × LF	20 × LF	20 × LF	°C	Years
–40 to 110	10 × LF	8.5 × LF	6 × LF	5 × LF	4 × LF	2 × LF	1 × LF	°C	Years
–40 to 125	Note 2								
–55 to 110	10 × LF	8.5 × LF	6 × LF	5 × LF	4 × LF	2 × LF	1 × LF	°C	Years
–55 to 125	Note 2								

1. LF = Lifetime Factor as defined by the number of programming cycles the device has seen under the conditions listed in the following table.
2. Contact technical support at www.microchip.com/support.

Table 4-70. FPGA Programming Cycles Lifetime Factor

Programming T_J	Programming Cycles	LF
–40 °C to 100 °C	500	1
–40 °C to 85 °C	1000	0.8
–40 °C to 55 °C	2000	0.6

Notes:

- The maximum number of accumulated device digest cycles is 100K. The maximum number of digests is 10K cycles between programming non-volatile data (fabric sNVM, user keys, user locks, and so on).
- Digests are operational only over the –40 °C to 100 °C temperature range.
- After a program cycle, an additional N digests cycles are allowed with the resultant retention characteristics for the total operating and storage temperature shown.
- Retention is specified for total device storage and operating temperature.
- All temperatures are junction temperatures (T_J).

© 2024 Microchip Technology Inc. and its subsidiaries

- **Example 1:** 500 digests cycles are performed between programming cycles. N = 500. The operating conditions are –40 °C to 85 °C T_J. 501 programming cycles have occurred. The retention under these operating conditions is 20 × LF = 20 × .8 = 16 years.
- **Example 2:** One programming cycle has occurred, N = 1500 digest cycles have occurred. Temperature range is –40 °C to 100 °C. The resultant retention is 10 × LF or 10 years over the industrial temperature range.

4.6.5 Digest Time

The following table describes digest time.

Table 4-71. Digest Times

Parameter	Devices	Typ	Max	Unit	Libero description
Setup time	All	2	-	µs	-
Fabric digest run time	RTPF500T, TL, TS, TLS	2085	2150	ms	Fabric digest
UFS CC digest run time	RTPF500T, TL, TS, TLS	33.5	35	µs	Fabric digest
sNVM digest run time[1]	RTPF500T, TL, TS, TLS	4.5	5	ms	sNVM digest
UFS UL digest run time	RTPF500T, TL, TS, TLS	47	49	µs	Security digest
User key digest run time[2]	RTPF500T, TL, TS, TLS	526	544	µs	Security digest
UFS UPERM digest run time	RTPF500T, TL, TS, TLS	33.2	35	µs	Standalone digest
Factory digest run time	RTPF500T, TL, TS, TLS	494	511	µs	Standalone digest

1. The entire sNVM is used as ROM.
2. Valid for user key 0 through 6.

Note: These times do not include the power-up to functional timing overhead when using digest checks on power-up.

4.6.6 Zeroization Time

The time taken to zeroize any or all configuration elements in response to a tamper event is detailed in this section.

Table 4-72. Zeroization Mode: Like New

Parameter	RTPF500T		Unit	Conditions
	Typ	Max		
Time to enter zeroization	—	—	ms	Zeroization-In-Progress (ZIP) flag is set
Time to destroy the data[1]	—	—	ms	Data erased, one scrubbing
Time to scrub the data (like new)[2]	—	—	s	Full scrubbing
Total time to zeroize (like new)[3]	—	—	s	Verification complete

© 2024 Microchip Technology Inc. and its subsidiaries

Table 4-73. Zeroization Mode: Non-Recoverable

Parameter	RTPF500T		Unit	Conditions
	Typ	Max		
Time to enter zeroization	—	—	ms	Zeroization-In-Progress (ZIP) flag is set
Time to destroy the data[1]	—	—	ms	Data erased, one scrubbing
Time to scrub the data (non-recoverable)[2]	—	—	s	Full scrubbing
Total time to zeroize (non-recoverable)[3]	—	—	s	Verification complete

1. Time to enter zeroization, erase fabric, and scrub pNVM once.
2. Time to enter zeroization, erase fabric and scrub pNVM once, and a full scrub of the pNVM and fabric.
3. Time to enter zeroization, erase fabric and scrub pNVM once, and a full scrub of the pNVM and fabric, and verify.

4.6.7 Verify Time

The following tables describe verify time.

Table 4-74. Standalone Fabric Verify Times

Parameter	Devices	Max	Unit
Standalone verification over JTAG	RTPF500T, TL, TS, TLS[1]	114	s
Standalone verification over SPI	RTPF500T, TL, TS, TLS[2]	89	s

1. Programmer: FlashPro5, TCK 10 MHz; PC configuration: Intel i7 at 3.6 GHz, 32 GB RAM, Windows 10.
2. SmartFusion2 with MSS running at 100 MHz, MSS_SPI_0 port running at 6.67 MHz. Bitstream stored in DDR. DirectC version 4.1.

Notes:

- Standalone verify is limited to 2,000 total verify hours over the industrial –40 °C to 100 °C temperature. For example, 2000 hours = 7.2M seconds. The RTPF500T device has a 114-second verify time over JTAG. This equates to 63,157 verify operations for the life of the RTPF500T device.
- Use the digest system service for verify times greater than 2,000 hours.
- Standalone verify checks the programming margin on both the P and N gates of the push-pull cell.
- Digest checks only the P side of the push-pull gate. However, the push-pull gates work in tandem. Digest check is recommended if users believe they will exceed the 2,000-hour verify time specification.

Table 4-75. Verify Time by Programming Hardware

Devices	IAP	FlashPro4	FlashPro5	Units
RTPF500T, TL, TS, TLS	15	169	114	s

Notes:

- FlashPro4 4 MHz TCK.

© 2024 Microchip Technology Inc. and its subsidiaries

- FlashPro5 10 MHz TCK.
- PC configuration: Intel i7 at 3.6 GHz, 32 GB RAM, Windows 10.

Table 4-76. Verify System Services

Parameter	Symbol	ServiceID	Devices	Typ	Max	Unit
In-application verify by index	$T_{IAP_Ver_Index}$	44H	RTPF500T, TL, TS, TLS	13.4	14	s
In-application verify by SPI address	$T_{IAP_Ver_Addr}$	45H	RTPF500T, TL, TS, TLS	13.4	14	s

4.6.8 Authentication Time

The following tables describe authentication system service time.

Table 4-77. Authentication Services

Parameter	Symbol	ServiceID	Devices	Typ	Max	Unit
Bitstream authentication	T_{BIT_AUTH}	23H	RTPF500T, TL, TS, TLS	7.6	7.8	s
IAP image authentication	T_{IAP_AUTH}	22H	RTPF500T, TL, TS, TLS	7.6	7.8	s

4.6.9 Secure NVM Performance

The following table describes secure NVM performance.

Table 4-78. sNVM Read/Write Characteristics

Parameter	Symbol	Min	Typ	Max	Unit	Conditions
Plain text programming	—	7.0	7.2	7.9	ms	—
Authenticated text programming	—	7.2	7.4	9.4	ms	—
Authenticated and encrypted text programming	—	7.2	7.4	9.4	ms	—
Authentication R/W 1st access from power-up overhead	T_{PUF_OVHD}	10	13	111	ms	From T_{FAB_READY}
Plain text read	—	8	8.5	9	µs	—
Authenticated text read	—	113	114.5	119	µs	—
Authenticated and decrypted text read	—	159	161	167	µs	—

Notes:

- Page size = 256 bytes (non-authenticated), 236 bytes (authenticated).
- Only page reads and writes allowed.
- T_{PUF_OVHD} is an additional time that occurs on the first R/W, after cold or warm boot, to sNVM using authenticated or authenticated and encrypted text.

4.6.10 Secure NVM Programming Cycles

The following table describes secure NVM programming cycles.

Table 4-79. sNVM Programming Cycles vs. Retention Characteristics[1]

Programming Temperature	Programming Cycles per Page, Max	Programming Cycles per Block, Max	Retention Years
–40 °C to 100 °C	10,000	100,000	20
–40 °C to 85 °C	10,000	100,000	20
–40 °C to 55 °C	10,000	100,000	20

© 2024 Microchip Technology Inc. and its subsidiaries

.....continued			
Programming Temperature	**Programming Cycles per Page, Max**	**Programming Cycles per Block, Max**	**Retention Years**
–40 °C to 125 °C	10,000	100,000	Note 2
–55 °C to 125 °C	10,000	100,000	Note 2

Notes:

1. Page size = 256 bytes. Block size = 56 KBytes.
2. Contact technical support at www.microchip.com/support.

4.7 System Services

This section describes system switching and throughput characteristics.

4.7.1 System Services Throughput Characteristics

The following table describes system services throughput characteristics.

Table 4-80. System Services Throughput Characteristics[6]

Parameter	Symbol	Service ID	Typ	Max	Unit	Conditions
Serial number	T_{Serial}	00H	65	67	µs	—
User code	T_{User}	01H	0.8	1.2	µs	—
Design information	T_{Design}	02H	2.5	3	µs	—
Device certificate	T_{Cert}	03H	255	271	ms	—
Read digests	T_{digest_read}	04H	201	215	µs	—
Query security locks	T_{sec_Query}	05H	15	17	µs	—
Read debug information	T_{Rd_debug}	06H	34	38	µs	—
Reserved	—	07H–0FH	—	—	—	—
Secure NVM write plain text	$T_{SNVM_Wr_Plain}$	10H	—	—	—	Note 1
Secure NVM write authenticated plain text	$T_{SNVM_Wr_Auth}$	11H	—	—	—	Note 1
Secure NVM write authenticated cipher text	$T_{SNVM_Wr_Cipher}$	12H	—	—	—	Note 1
Reserved	—	13H–17H	—	—	—	—
Secure NVM read	T_{SNVM_Rd}	18H	—	—	—	Note 1
Digital signature service raw	T_{SIG_RAW}	19H	174	187	ms	—
Digital signature service DER	T_{SIG_DER}	1AH	174	187	ms	—
Reserved	—	1BH–1FH	—	—	—	—
PUF emulation	$T_{Challenge}$	20H	1.8	2.0	ms	—
Nonce service	T_{Nonce}	21H	1.2	1.5	ms	—
Bitstream authentication	T_{BIT_AUTH}	22H	—	—	—	Note 4
IAP Image authentication	T_{IAP_AUTH}	23H	—	—	—	Note 4
Reserved	—	26H–3FH	—	—	—	—
In-application programming by index	$T_{IAP_Prg_Index}$	42H	—	—	—	Note 2
In-application programming by SPI address	$T_{IAP_Prg_Addr}$	43H	—	—	—	Note 2
In-application verify by index	$T_{IAP_Ver_Index}$	44H	—	—	—	Note 5
In-application verify by SPI address	$T_{IAP_Ver_Addr}$	45H	—	—	—	Note 5
Auto update	$T_{AutoUpdate}$	46H	—	—	—	Note 2

© 2024 Microchip Technology Inc. and its subsidiaries

.....continued						
Parameter	**Symbol**	**Service ID**	**Typ**	**Max**	**Unit**	**Conditions**
Digest check	T_{digest_chk}	47H	—	—	—	Note 3

1. See Table 4-78.
2. See Table 4-64.
3. See Table 4-71.
4. See Table 4-77.
5. See Table 4-76.
6. Throughputs described are measured from SS_REQ assertion to BUSY de-assertion.

4.8 Fabric Macros

This section describes switching characteristics of UJTAG, UJTAG_SEC, PF_SPI, system controller, and tamper detectors and dynamic reconfiguration.

4.8.1 UJTAG Switching Characteristics

The following section describes characteristics of UJTAG switching.

Table 4-81. UJTAG Performance Characteristics

Parameter	Symbol	Min	Typ	Max	Unit	Condition
TCK frequency	F_{TCK}	—	—	25	MHz	—

Figure 4-9. UJTAG Timing Diagram

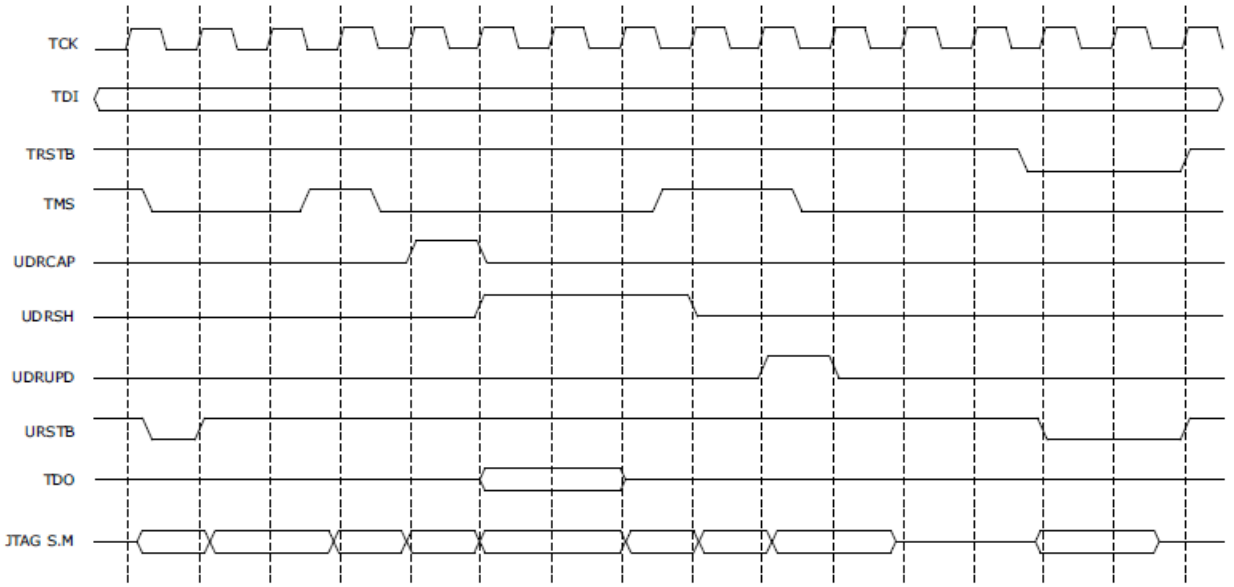

4.8.2 UJTAG_SEC Switching Characteristics

The following table describes characteristics of UJTAG_SEC switching.

Table 4-82. UJTAG Security Performance Characteristics

Parameter	Symbol	Min	Typ	Max	Unit	Condition
TCK frequency	F_{TCK}	—	—	—	MHz	—

© 2024 Microchip Technology Inc. and its subsidiaries

4.8.3 PF_SPI Initiator Programming Switching Characteristics

The following section describes characteristics of PF_SPI initiator programming switching.

Table 4-83. SPI Initiator Programming Performance Characteristics

Parameter	Symbol	Min	Typ	Max	Unit	Condition
SCK frequency	F_{SCK}	—	—	20	MHz	—

4.8.4 Tamper Detectors

The following section describes tamper detectors.

Table 4-84. ADC Conversion Rate

Parameter	Description	Min	Typ[1]	Max	Unit
T_{CONV1}	Time from enable changing from zero to non-zero value to first conversion completes. Minimum value applies when POWEROFF = 0.	350	—	470	µs
T_{CONVN}	Time between subsequent channel conversions.	—	480	—	µs
T_{SETUP}	Data channel and output to valid asserted. Data is held until next conversion completes, that is >480 µs.	0	—	—	ns
T_{VALID} [2]	Width of the valid pulse.	1.5	—	2.5	µs
T_{RATE}	Time from start of first set of conversions to the start of the next set. Can be considered as the conversion rate. Is set by the conversion rate parameter.	—	Rate × 32	—	µs

1. Min, Typ, and Max refer to variation due to functional configuration and the raw TVS value. The actual internal correction time will vary based on the raw TVS value.
2. The pulse width varies depending on the time taken to complete the internal calibration multiplication, this can be up to 375 ns.

Note: Once the TVS block is active, the enable signal is sampled 25 ns before the falling edge of valid. The next enabled channel in the sequence 0-1-2-3 is started; that is, if channel 0 has just completed and only channels 0 and 3 are enabled, the next channel will be 3. When all the enabled channels in the sequence 0-1-2-3 are completed, the TVS waits for the conversion rate timer to expire. The enable signal may be changed at any time if it changes to 4'b0000 while valid is asserted (and 25 ns before valid is de-asserted), then no further conversions will be started.

Table 4-85. Temperature and Voltage Sensor Electrical Characteristics

Parameter	Min	Typ	Max	Unit	Condition
Temperature sensing range	–55	—	125	°C	—
Temperature sensing accuracy	–10	—	10	°C	—
Voltage sensing range	0.9	—	2.8	V	—
Voltage sensing accuracy	–3.0	—	3.0	%	—

© 2024 Microchip Technology Inc. and its subsidiaries

Table 4-86. Tamper Macro Timing Characteristics—Flags and Clearing

Parameter	Symbol	Typ	Max	Unit
From event detection to flag generation	T_{JTAG_ACTIVE} [1]	28	35	ns
	T_{MESH_ERR} [1]	1.8	2.5	µs
	T_{CLK_GLITCH} [1]	—	50	ns
	T_{CLK_FREQ} [1]	—	4	µs
	T_{LOW_VDD} [1, 3]	70	1000	µs
	T_{HIGH_VDD18} [1, 3]	85	1000	µs
	T_{HIGH_VDD25} [1, 3]	130	1000	µs
	T_{SECDEC} [1]	—	5	ns
	T_{DRI_ERR} [1]	14	18	µs
	T_{WDOG} [1]	—	5	ns
	T_{LOCK_ERR} [1]	—	5	ns
Time from system controller instruction execution to flag generation	$T_{INST_BUF_ACCESS}$ [1, 2]	4	5	µs
	T_{INST_DEBUG} [1, 2]	3.3	4	µs
	$T_{INST_CHK_DIGEST}$ [1, 2]	1.8	3	µs
	$T_{INST_EC_SETUP}$ [1, 2]	1.8	2	µs
	$T_{INST_FACT_PRIV}$ [1, 2]	3.8	5	µs
	$T_{INST_KEY_VAL}$ [1, 2]	2.5	3.5	µs
	T_{INST_MISC} [1, 2]	1.5	2	µs
	$T_{INST_PASSCODE_MATCH}$ [1, 2]	2.5	3	µs
	$T_{INST_PASSCODE_SETUP}$ [1, 2]	4.2	5	µs
	T_{INST_PROG} [1, 2]	3.8	4.5	µs
	$T_{INST_PUB_INFO}$ [1, 2]	4	4.5	µs
	$T_{INST_ZERO_RECO}$ [1, 2]	2.5	3	µs
	$T_{INST_PASSCODE_FAIL}$ [1, 2]	170	180	µs
	$T_{INST_KEY_VAL_FAIL}$ [1, 2]	92	110	µs
	T_{INST_UNUSED} [1, 2]	4	5	µs
Time from sending the CLEAR to deassertion on FLAG	T_{CLEAR_FLAG}	17	23	ns

1. The timing does not impact the user design, but it is useful for security analysis.
2. System service requests from the fabric will interrupt the system controller delaying the generation of the flag.
3. Timing of these depends highly on supply ramp rate.

Table 4-87. Tamper Macro Response Timing Characteristics

Parameter	Symbol	Typ	Max	Unit
Time from triggering the response to all I/Os disabled	$T_{IO_DISABLE}$	45	63	ns
Time from negation of RESPONSE to all I/Os re-enabled	$T_{CLR_IO_DISABLE}$	34	51	ns
Time from triggering the response to security locked	$T_{LOCKDOWN}$	—	20	ns
Time from negation of RESPONSE to earlier security unlock condition	$T_{CLR_LOCKDOWN}$	—	20	ns
Time from triggering the response to device enters RESET	T_{tr_RESET}	11.7	14	µs

© 2024 Microchip Technology Inc. and its subsidiaries

.....continued				
Parameter	**Symbol**	**Typ**	**Max**	**Unit**
Time from triggering the response to start of zeroization	$T_{tr_ZEROLISE}$	7.4	8.2	ms

4.8.5 System Controller Suspend Switching Characteristics

The following table describes the characteristics of system controller suspend switching.

Table 4-88. System Controller Suspend Entry and Exit Characteristics

Parameter	Symbol	Definition	Typ	Max	Unit
Time from TRSTb falling edge to SUSPEND_EN signal assertion	$T_{suspend_Tr}$ [1, 2]	Suspend entry time from TRST_N assertion	42	44	ns
Time from TRSTb rising edge to ACTIVE signal assertion	$T_{suspend_exit}$	Suspend exit time from TRST_N negation	361	372	ns

1. ACTIVE indicates that the system controller is inactive or active regardless of the state of SUSPEND_EN.
2. ACTIVE signal must never be asserted with SUSPEND_EN is asserted.

4.8.6 Dynamic Reconfiguration Interface

The following table provides interface timing information for the DRI, which is an embedded APB target interface within the FPGA fabric that does not use FPGA resources.

Table 4-89. Dynamic Reconfiguration Interface Timing Characteristics

Parameter	Symbol	Max	Unit
PCLK frequency	F_{PD_PCLK}	200	MHz

4.8.7 User Voltage Detector Characteristics

The following table provides the electrical characteristics of the V_{DD} (1.0V), V_{DD18}, and V_{DD25} voltage detectors. For proper operation of the voltage detectors, V_{DD} must be set to 1.0V.

Table 4-90. User Voltage Detector Electrical Characteristics

Parameter	Min	Typ	Max	Unit	Condition
$V_{DD_HIGH_DET}$	1.037	—	1.097	V	Temp= –55 °C to 125 °C; V_{DD18} = 1.8V ±5%; V_{DD25}= 2.5V ±3%
$V_{DD18_HIGH_DET}$	1.90	—	1.993	V	Temp= –55 °C to 125 °C; V_{DD} = 1.0V ±3%; V_{DD25}= 2.5V ±3%
$V_{DD25_HIGH_DET}$	2.630	—	2.765	V	Temp= –55 °C to 125 °C; V_{DD} = 1.0V ±3%; V_{DD18}= 1.8V ±5%
$V_{DD_LOW_DET}$	0.910	—	0.957	V	Temp= –55 °C to 125 °C; V_{DD18} = 1.8V ±5%; V_{DD25}= 2.5V ±3%
$V_{DD18_LOW_DET}$	1.560	—	1.640	V	Temp= –55 °C to 125 °C; V_{DD} = 1.0V ±3%; V_{DD25}= 2.5V ±3%
$V_{DD25_LOW_DET}$	2.193	—	2.306	V	Temp= –55 °C to 125 °C; V_{DD} = 1.0V ±3%; V_{DD18}= 1.8V ±5%

4.9 Power-Up to Functional Timing

Microchip non-volatile FPGA technology offers the fastest boot-time of any mid-range FPGA in the market. The following tables describe both cold-boot (from power-on) and warm-boot (assertion of DEVRST_N pin or assertion of reset from the tamper macro) timing. The power-up diagrams assume all power supplies to the device are stable.

4.9.1 Power-On (Cold) Reset Initialization Sequence

The following cold reset timing diagram shows the initialization sequencing of the device.

© 2024 Microchip Technology Inc. and its subsidiaries

Figure 4-10. Cold Reset Timing

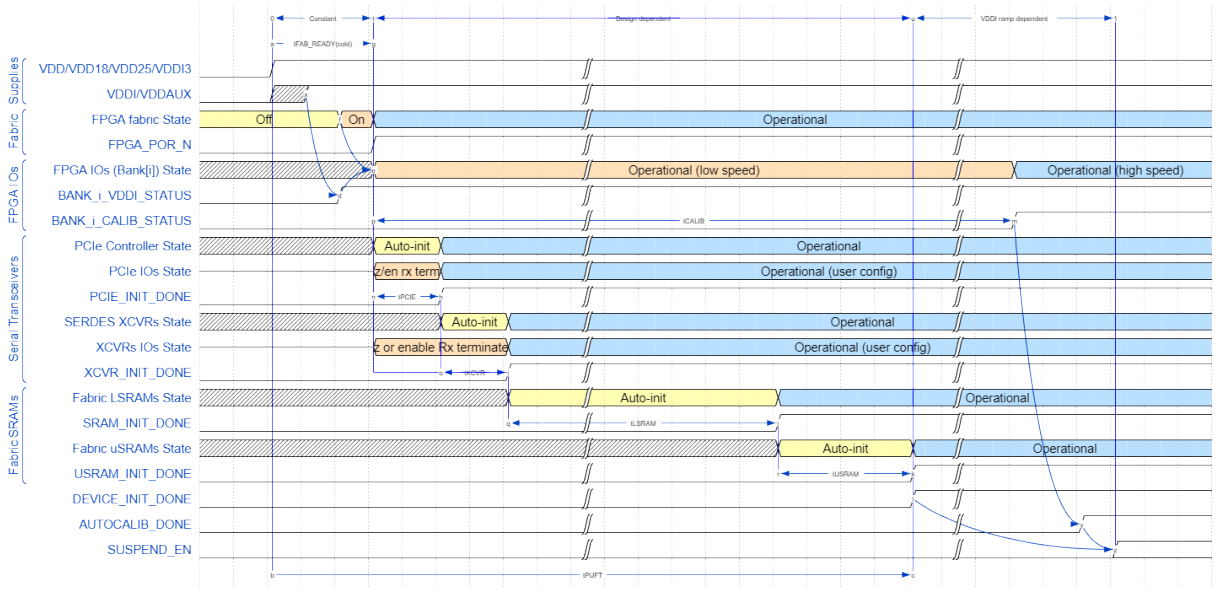

Notes:

- Figure 4-10 shows the case where VDDI/VDDAUX of I/O banks are powered either before or sufficiently soon after VDD/VDD18/VDD25/VDDI3 that the I/O bank enable time is measured from the assertion time of VDD/VDD18/VDD25/VDDI3 (that is, the PUFT specification). If VDDI/VDDAUX of I/O banks are powered sufficiently after VDD/VDD18/VDD25/VDDI3, then the I/O bank enable time is measured from the assertion of VDDI/VDDAUX and is not specified by the PUFT specification. In this case, I/O operation is indicated by the assertion of BANK_i_VDDI_STATUS, rather than being measured relative to FABRIC_POR_N negation. Refer to Main Supplies for suplies that must always be on for proper startup.
- AUTOCALIB_DONE assertion indicates the completion of the I/O bank calibration controller enable sequence when auto-calibration is enabled. AUTOCALIB_DONE asserts independently of DEVICE_INIT_DONE. It may assert before or after DEVICE_INIT_DONE and is determined by the following:
  - How long after VDD/VDD18/VDD25/VDDI3 that VDDI/VDDAUX are powered ON. Note that if any of the user-specified I/O banks are not powered ON within the auto-calibration timeout window, then AUTOCALIB_DONE doesn't assert until after this timeout.
  - The specified ramp times of VDDI of each I/O bank enabled for auto-calibration.
  - How much auto-initialization is to be performed for the PCIe, SERDES transceivers, and fabric LSRAMs.
- If auto-calibration is enabled, any I/O banks that do not have their VDDI/VDDAUX powered ON within the auto-calibration timeout window, then it will be approximately auto-calibrated whenever VDDI/VDDAUX is subsequently powered ON. To obtain an accurate calibration however, on such I/O banks, it is necessary to initiate a re-calibration (using CALIB_START from fabric).
- AVM_ACTIVE only asserts if avionics mode is being used. It is asserted when the later of DEVICE_INIT_DONE or AUTOCALIB_DONE assert.
- The bank specific signal BANK_x_CALIB_STATUS signal is asserted when a I/O bank calibration has completed.

© 2024 Microchip Technology Inc. and its subsidiaries

4.9.2 Warm Reset Initialization Sequence

The following warm reset timing diagram shows the initialization sequencing of the device when either DEVRST_N or TAMPER_RESET_DEVICE signals are asserted.

Figure 4-11. Warm Reset Timing

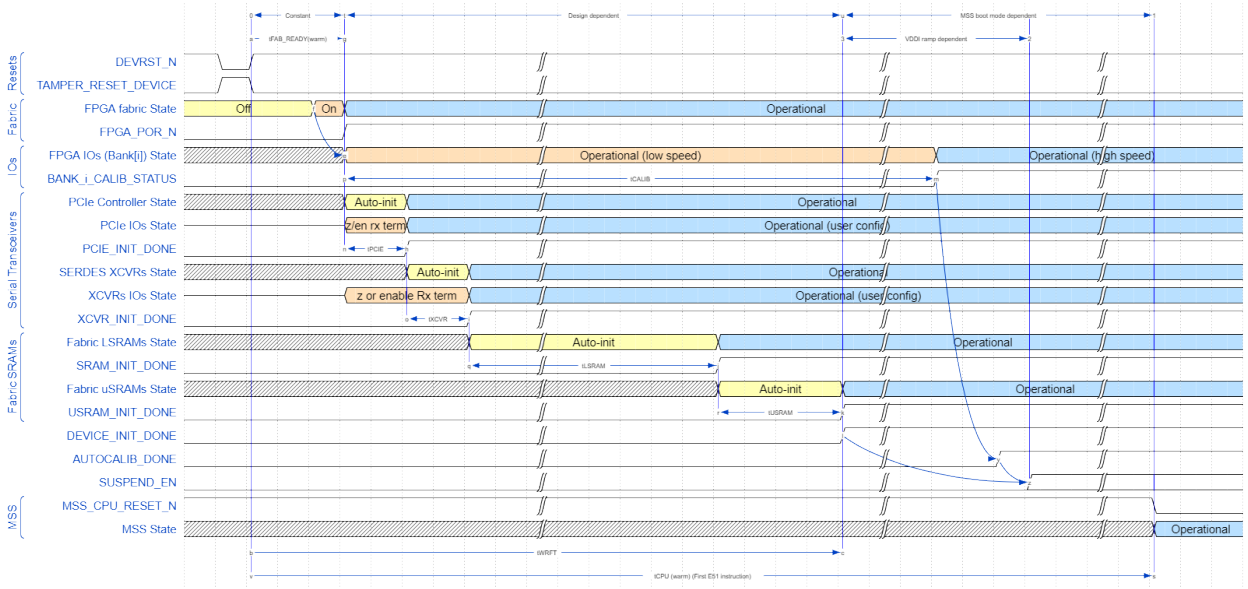

4.9.3 Power-On Reset Voltages

The following sections describe the power-on reset voltages.

4.9.3.1 Main Supplies

The start of power-up to functional time (T_{PUFT}) is defined as the point at which the latest of the main supplies (VDD, VDD18, VDD25, VDDI3) reach the reference voltage levels specified in the following table. This starts the process of releasing the reset of the device and powering ON the FPGA fabric and I/Os.

Table 4-91. POR Ref Voltages

Supply	Power-On Reset Start Point (V)	Note
VDD	0.95	Applies to both 1.0V and 1.05V operation.
VDD18	1.71	—
VDD25	2.25	—
VDDI3	I/O-Related Supplies	—

4.9.3.2 I/O-Related Supplies

For the I/Os to become functional at low speed (sub-400 MHz operation), the (per-bank) I/O supplies (VDDI, VDDAUX) must reach the trip point voltage levels specified in the following table and the main supplies above must also be powered ON.

Table 4-92. I/O-Related Supplies

Supply	I/O Power-Up Start Point (V)
VDDI	0.85
VDDAUX	1.6

© 2024 Microchip Technology Inc. and its subsidiaries

- There are no sequencing requirements for the power supplies. There are few sequences that can create temporary glitches on GPIO during initialization. Refer to RT PolarFire FPGA Board Design User Guide for more details. In order for the device to start initialization, VDDI3 must be powered before or at the same time as the other main supplies (VDD, VDD18, VDD25). The other I/O supplies (VDDI, VDDAUX) have no effect on power-up of FPGA fabric (that is, the fabric still powers up even if the I/O supplies of I/O banks remain powered OFF, with the exception of VDDI3).

4.9.4 User Design Dependence of Power-Up Times

Some phases of the device initialization are user design dependent, as the device automatically initializes certain resources to user-specified configurations if those resources are used in the design. It is necessary to compute the overall power-up to functional time by referencing the following tables and adding the relevant phases, according to the design configuration. The following equation refers to timing parameters specified in the above timing diagrams. Note T_{PCIE}, T_{XCVR}, T_{LSRAM}, and T_{USRAM} can be found in PolarFire Family Power-Up and Resets User Guide.

$T_{PUFT} = T_{FAB_READY(cold)} + \max((T_{PCIE} + T_{XCVR} + T_{LSRAM} + T_{USRAM} + T_{CPU}), T_{CALIB})$

$T_{WRFT} = T_{FAB_READY(warm)} + \max((T_{PCIE} + T_{XCVR} + T_{LSRAM} + T_{USRAM} + T_{CPU}), T_{CALIB})$

Note: T_{PCIE}, T_{XCVR}, T_{LSRAM}, T_{USRAM}, and T_{CALIB} are common to both cold and warm reset scenarios.

Auto-initialization of FPGA (if required) occurs in parallel with I/O calibration. The device may be considered fully functional only when the later of these two activities has finished, which may be either one, depending on the configuration, as may be calculated from the following tables. Note that I/O calibration may extend beyond T_{PUFT} (as I/O calibration process is independent of main device power-on and is instead dependent on I/O bank supply relative power-on time and ramp times). The previous timing diagram for power-on initialization shows the earliest that I/Os could be enabled, if the I/O power supplies are powered on before or at the same time as the main supplies.

4.9.5 Cold Reset to Fabric and I/Os (Low Speed) Functional

The following table specifies the minimum, typical, and maximum times from the power supplies reaching the above trip point levels until the FPGA fabric is operational and the FPGA I/Os are functional for low-speed (sub-400 MHz) operation.

Table 4-93. Fabric and I/O Cold Boot

Power-On (Cold) Reset to Fabric and I/O Operational	Min	Typ	Max	Unit
Time when input pins start working – $T_{IN_ACTIVE(cold)}$	0.92	4.38	7.84	ms
Time when weak pull-ups are enabled – $T_{PU_PD_ACTIVE(cold)}$	0.92	4.38	7.84	ms
Time when fabric is operational – $T_{FAB_READY(cold)}$	0.95	4.41	7.87	ms
Time when output pins start driving – $T_{OUT_ACTIVE(cold)}$	0.97	4.43	7.89	ms

4.9.6 Warm Reset to Fabric and I/Os (Low Speed) Functional

The following table specifies the minimum, typical, and maximum times from the negation of the warm reset event until the FPGA fabric is operational and the FPGA I/Os are functional for low-speed (sub-400 MHz) operation.

© 2024 Microchip Technology Inc. and its subsidiaries

Table 4-94. Fabric and I/O Warm Boot

Warm Reset to Fabric and I/O Operational	Min	Typ	Max	Unit
Time when input pins start working – $T_{IN_ACTIVE(warm)}$	0.65	1.63	2.62	ms
Time when weak pull-ups/pull-downs are enabled – $T_{PU_PD_ACTIVE(warm)}$	0.65	1.63	2.62	ms
Time when fabric is operational – $T_{FAB_READY(warm)}$	0.68	1.66	2.65	ms
Time when output pins start driving – $T_{OUT_ACTIVE(warm)}$	0.70	1.68	2.67	ms

4.9.7 Miscellaneous Initialization Parameters

In the following table, T_{FAB_READY} refers to either $T_{FAB_READY(cold)}$ or $T_{FAB_READY(warm)}$ as specified in the previous tables, depending on whether the initialization is occurring as a result of a cold or warm reset, respectively.

Table 4-95. Cold and Warm Boot[2]

Parameter	Symbol	Min	Typ	Max	Unit	Condition
The time from T_{FAB_READY} to ready to program through JTAG/ SPI-Target	—	0	0	0	ms	—
The time from T_{FAB_READY} to auto-update start	—	—	T_{PUF_OVHD} [1]	T_{PUF_OVHD} [1]	ms	—
The time from T_{FAB_READY} to programming recovery start	—	—	T_{PUF_OVHD} [1]	T_{PUF_OVHD} [1]	ms	—
The time from T_{FAB_READY} to the tamper flags being available	T_{TAMPER_READY}	0	0	0	ms	—
The time from T_{FAB_READY} to the Athena Crypto co-processor being available (for S devices only)	T_{CRYPTO_READY}	0	0	0	ms	—

1. Programming depends on the PUF to power-up. Refer to T_{PUF_OVHD} in Secure NVM Performance.
2. Time excludes the optional FPGA auto-initialization (LSRAM, uSRAM, Transceivers). Refer to T_{WRFT} and T_{PUFT} formulas in User Design Dependence of Power-Up Times to calculate total startup time.

4.9.8 I/O Calibration

The following tables specify the initial I/O calibration time for the fastest and slowest supported VDDI ramp times of 0.2 ms to 50 ms, respectively. This only applies to I/O banks specified by the user to be auto-calibrated.

© 2024 Microchip Technology Inc. and its subsidiaries

Table 4-96. I/O Initial Calibration Time (TCALIB)

Ramp Time	Min (ms)	Max (ms)	Condition
0.2 ms	0.98	2.63	Applies to HSIO and GPIO banks
50 ms	41.62	62.19	Applies to HSIO and GPIO banks

Notes:

- The user may specify any VDDI ramp time in the range specified above. The nominal initial calibration time is given by the specified VDDI ramp time plus 2 ms.
- In order for I/O calibration to start, VDDI and VDDAUX of the I/O bank must be higher than the trip point levels specified in I/O-Related Supplies.

Table 4-97. I/O Fast Recalibration Time (TRECALIB)

I/O Type	Min (ms)	Typ (ms)	Max (ms)	Condition
GPIO bank	0.04	0.14	0.24	GPIO configured for 3.3V operation
HSIO bank	0.11	0.20	0.30	HSIO configured for 1.8V operation

Note: In order to obtain fast re-calibration, the user must assert the relevant calibration request signals from the FPGA fabric to the I/O bank controller (see PF_INIT_MONITOR IP).

4.10 Dedicated Pins

The following section describes the dedicated pins.

4.10.1 JTAG Switching Characteristics

The following table describes characteristics of JTAG switching.

Table 4-98. JTAG Electrical Characteristics

Symbol	Description	Min	Typ	Max	Unit	Condition
T_{DISU}	TDI input setup time	0.0	—	—	ns	—
T_{DIHD}	TDI input hold time	2.0	—	—	ns	—
T_{TMSSU}	TMS input setup time	1.5	—	—	ns	—
T_{TMSHD}	TMS input hold time	1.5	—	—	ns	—
F_{TCK}	TCK frequency	—	—	25	MHz	—
T_{TCKDC}	TCK duty cycle	40	—	60	%	—
T_{TDOCQ}	TDO clock to Q out	—	—	8.4	ns	C_{LOAD} = 40 pf
T_{RSTBCQ}	TRSTB clock to Q out	—	—	23.5	ns	C_{LOAD} = 40 pf
T_{RSTBPW}	TRSTB min pulse width	50	—	—	ns	—
$T_{RSTBREM}$	TRSTB removal time	0.0	—	—	ns	—
$T_{RSTBREC}$	TRSTB recovery time	12.0	—	—	ns	—
CIN_{TDI}	TDI input pin capacitance	—	—	5.3	pf	—
CIN_{TMS}	TMS input pin capacitance	—	—	5.3	pf	—
CIN_{TCK}	TCK input pin capacitance	—	—	5.3	pf	—
CIN_{TRSTB}	TRSTB input pin capacitance	—	—	5.3	pf	—

4.10.2 SPI Switching Characteristics

The following tables describe characteristics of SPI switching.

© 2024 Microchip Technology Inc. and its subsidiaries

Table 4-99. SPI Initiator Mode (RT PolarFire Initiator)[1, 2]

Parameter	Symbol	Min	Max	Unit	Condition
SCK frequency	sp1i_sc	—	20	MHz	During Programming
			40	MHz	During Initialization
SCK minimum pulse width high	sp2i_sc	SCK_period/2	—	ns	—
SCK minimum pulse width low	sp3i_sc	SCK_period/2	—	ns	—
Rise and fall times	sp4i_sc sp5i_sc	—	—	ns	Refer to PolarFire IBIS models[3]
SCK to SDO	sp6i_sc	–2.0	3.0	ns	—
SDI to SCK setup time	sp7i_sc	10.0	—	ns	—
SDI to SCK hold time	sp8i_sc	–1.0	—	ns	—

Notes:

1. Parameters are referenced to the active edge of SCK, which depends on the configured SPI protocol (for example, Motorola SPI mode uses rising edge as active edge if SPO = 0).
2. SDI is clocked into SPI on active edge and clocked out on inactive edge. Therefore, SDO delay parameters are dependent on SCK frequency (nominally SCK_period/2).
3. For specific rise/fall times, board design considerations, and detailed output buffer resistances, use the corresponding IBIS models located online at IBIS Models: RT PolarFire.

Table 4-100. SPI Target Mode (PolarFire Target)[1, 2]

Parameter	Symbol	Min	Max	Unit	Condition
SCK frequency	sp1t_sc	—	50	MHz	Determined by external initiator
SCK minimum pulse width high	sp2t_sc	SCK_period/2	—	ns	—
SCK minimum pulse width low	sp3t_sc	SCK_period/2	—	ns	—
Rise and fall times	sp4t_sc sp5t_sc	—	—	ns	Refer to PolarFire IBIS models[3]
SCK to SDO	sp6t_sc	0.0	8.0	ns	—
SDI setup time to SCK	sp7t_sc	2.0	—	ns	—
SDI hold time from SCK	sp8t_sc	2.0	—	ns	—

Notes:

1. Parameters are referenced to the active edge of SCK, which depends on the configured SPI protocol (for example, Motorola SPI mode uses rising edge as active edge if SPO = 0).
2. SDI is clocked into SPI on active edge and clocked out on inactive edge. Therefore, SDO delay parameters are dependent on SCK frequency (nominally SCK_period/2).

© 2024 Microchip Technology Inc. and its subsidiaries

3. For specific rise/fall times, board design considerations, and detailed output buffer resistances, use the corresponding IBIS models located online at IBIS Models: RT PolarFire.

Figure 4-12. SPI Timing for a Single Frame Transfer in Motorola Mode (SPH = 1)

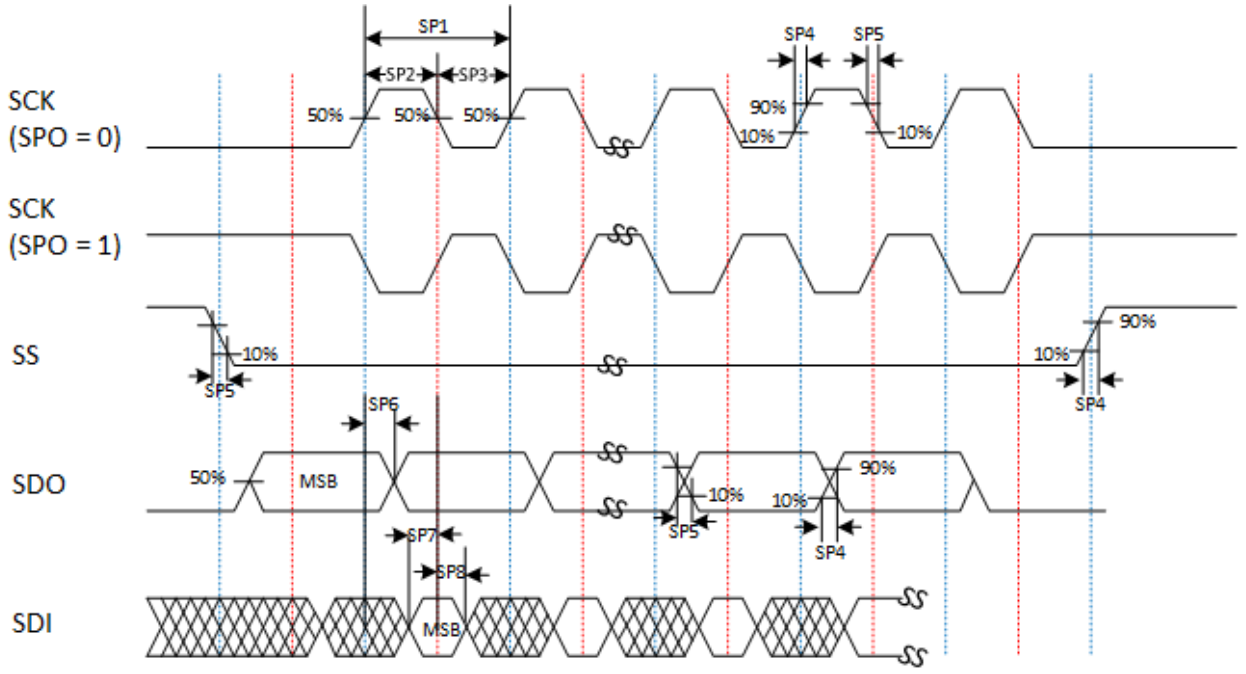

4.10.3 SmartDebug Probe Switching Characteristics

The following table describes characteristics of SmartDebug probe switching.

Table 4-101. SmartDebug Probe Performance Characteristics

Parameter	Symbol	V_{DD} = 1.0V STD	V_{DD} = 1.0V –1	V_{DD} = 1.05V STD	V_{DD} = 1.05V –1	Unit
Maximum frequency of probe signal	F_{MAX}	100	100	100	100	MHz
Minimum delay of probe signal	T_{Min_delay}	—	—	—	—	ns
Maximum delay of probe signal	T_{Max_delay}	—	—	—	—	ns

4.10.4 DEVRST_N Switching Characteristics

The following table describes characteristics of DEVRST_N switching.

Table 4-102. DEVRST_N Electrical Characteristics[1]

Parameter	Symbol	Min	Typ	Max	Unit	Condition
DEVRST_N ramp time	DR_{RAMP}	—	10	—	µs	DEVRST_N ramp must be monotonic and meet the rise and fall time requirement.
DEVRST_N assert time	DR_{ASSERT}	1	—	—	µs	The minimum time for DEVRST_N assertion to be recognized.
DEVRST_N de-assert time	$DR_{DEASSERT}$	2.75	—	—	ms	The minimum time DEVRST_N needs to be de-asserted before assertion.

© 2024 Microchip Technology Inc. and its subsidiaries

1. For regular I/Os (GPIO and HSIO) rise and fall time requirements, refer to Table 3-5.

4.11 User Crypto

The following section describes user crypto.

4.11.1 TeraFire® 5200B Switching Characteristics

The following table describes TeraFire® 5200B switching characteristics.

Table 4-103. TeraFire® F5200B Switching Characteristics

Parameter	Symbol	STD	– 1	Unit	Condition
F_{MAX} with DLL	F_{MAX_DLL}	189	189	MHz	–55 °C to 125 °C
F_{MIN} with DLL	F_{MIN_DLL}	125	125	MHz	–55 °C to 125 °C
F_{MAX} with DLL in bypass mode	$F_{MAX_DLL_BYPASS}$	70	70	MHz	–55 °C to 125 °C
F_{MIN} with DLL in bypass mode	$F_{MIN_DLL_BYPASS}$	0	0	MHz	–55 °C to 125 °C

4.11.2 TeraFire® 5200B Throughput Characteristics

The following tables for each algorithm describe the TeraFire® 5200B throughput characteristics. Adding the 2 columns clock counts on any given row will yield the expected performance for that algorithm and message size.

Note: Throughput cycle count collected with Athena TeraFire core and a soft RISC-V CPU running at 70 MHz.

Table 4-104. AES

Modes	Message Size (Bits)	Athena TeraFire Crypto Core Clock-Cycles	RISC-V CPU Clock-Cycles
AES-ECB-128 encrypt[1]	128	511	1011
	64K	48109	927
AES-ECB-128 decrypt[1]	128	557	1328
	64K	48385	1282
AES-ECB-256 encrypt[1]	128	527	1333
	64K	56301	1303
AES-ECB-256 decrypt[1]	128	589	1356
	64K	56673	1410
AES-CBC-256 encrypt[1]	128	588	1316
	64K	58691	1286
AES-CBC-256 decrypt[1]	128	617	1676
	64K	56853	1730
AES-GCM-128 encrypt[1], 128-bit tag, (full message encrypted/authenticated)	128	1921	1701
	64K	58022	1640
AES-GCM-256 encrypt[1], 128-bit tag, (full message encrypted/authenticated)	128	1969	1718
	64K	58054	1803

1. With DPA counter measures.

© 2024 Microchip Technology Inc. and its subsidiaries

Table 4-105. GMAC

Modes	Message Size (Bits)	Athena TeraFire Crypto Core Clock-Cycles	RISC-V CPU Clock-Cycles
AES-GCM-256[1], 128-bit tag, (message is only authenticated)	128	1859	1752
	64K	47659	1854

1. With DPA counter measures.

Table 4-106. HMAC

Modes	Message Size (Bits)	Athena TeraFire Crypto Core Clock-Cycles	RISC-V CPU Clock-Cycles
HMAC-SHA-256[1], 256-bit key	512	7461	1616
	64K	86319	1350
HMAC-SHA-384[1], 384-bit key	1024	13017	1438
	64K	104055	1438

1. With DPA counter measures.

Table 4-107. CMAC

Modes	Message Size (Bits)	Athena TeraFire Crypto Core Clock-Cycles	RISC-V CPU Clock-Cycles
AES-CMAC-256[1] (message is only authenticated)	128	446	8434
	64K	45494	110209

1. With DPA counter measures.

Table 4-108. KEY TREE

Modes	Message Size (Bits)	Athena TeraFire Crypto Core Clock-Cycles	RISC-V CPU Clock-Cycles
128-bit nonce + 8-bit optype	—	102457	2173
256-bit nonce + 8-bit optype	—	103218	2359

Table 4-109. SHA

Modes	Message Size (Bits)	Athena TeraFire Crypto Core Clock-Cycles	RISC-V CPU Clock-Cycles
SHA-1[1]	512	2370	816
	64K	75528	709
SHA-256[1]	512	2500	656
	64K	82704	656
SHA-384[1]	1024	4122	712
	64K	98174	656
SHA-512[1]	1024	4122	652
	64K	98174	653

1. With DPA counter measures.

© 2024 Microchip Technology Inc. and its subsidiaries

Table 4-110. ECC

Modes	Message Size (Bits)	Athena TeraFire Crypto Core Clock-Cycles	RISC-V CPU Clock-Cycles
ECDSA SigGen, P-384/SHA-384[1]	1024	12525647	5072
	8K	12540387	5072
ECDSA SigGen, P-384/SHA-384	1024	5502896	5071
	8K	5513718	5071
ECDSA SigVer, P-384/SHA-384[1]	1024	6243821	4683
	8K	6321110	4422
ECDSA SigVer, P-384/SHA-384	1024	6243821	4422
	8K	6321110	4422
Key Agreement (KAS), P-384	—	5039125	10318
Point Multiply, P-256[1]	—	5177474	4434
Point Multiply, P-384[1]	—	12055519	5086
Point Multiply, P-521[1]	—	26889271	6470
Point Addition, P-384	—	3018067	5303
KeyGen (PKG), P-384	—	12052230	7909
Point Verification, P-384	—	5091	3354

1. With DPA counter measures.

Table 4-111. IFC (RSA)

Modes	Message Size (Bits)	Athena TeraFire Crypto Core Clock-Cycles	RISC-V CPU Clock-Cycles
Encrypt, RSA-2048, e=65537	2048	436972	8287
Encrypt, RSA-3072, e=65537	3072	962162	12063
Decrypt, RSA-2048[1], CRT	2048	26847616	15261
Decrypt, RSA-3072[1], CRT	3072	75168689	22488
Decrypt, RSA-4096, CRT	4096	88789629	23585
Decrypt, RSA-3072, CRT	3072	38202717	18838
SigGen, RSA-3072/SHA-384[1] ,CRT, PKCS #1 V 1 1.5	1024	75156973	19562
	8K	75222026	18880
SigGen, RSA-3072/SHA-384, PKCS #1, V 1.5	1024	148092303	13622
	8K	148102319	13622
SigVer, RSA-3072/SHA-384, e = 65537, PKCS #1 V 1.5	1024	970959	11769
	8K	981755	11769
SigVer, RSA-2048/SHA-256, e = 65537, PKCS #1 V 1.5	1024	443593	8490
	8K	452751	8443
SigGen, RSA-3072/SHA-384, ANSI X9.31	1024	147143879	13624
	8K	147153109	13417
SigVer, RSA-3072/SHA-384, e = 65537, ANSI X9.31	1024	972788	11268
	8K	983643	11215

1. With DPA counter measures.

© 2024 Microchip Technology Inc. and its subsidiaries

Table 4-112. FFC (DH)

Modes	Message Size (Bits)	Athena TeraFire Crypto Core Clock-Cycles	RISC-V CPU Clock-Cycles
SigGen, DSA-3072/SHA-384[1]	1024	27932434	13271
	8K	27946636	13166
SigGen, DSA-3072/SHA-384	1024	12086324	13028
	8K	12097138	12862
SigVer, DSA-3072/SHA-384	1024	24711796	14689
	8K	24418930	14689
SigVer, DSA-2048/SHA-256	1024	9673222	10717
	8K	9803028	10717
Key Agreement (KAS), DH-3072 (p=3072, security=256)	—	4920705	9519
Key Agreement (KAS), DH-3072 (p=3072, security=256)[1]	—	78871914	9495

1. With DPA counter measures.

Table 4-113. NRBG

Modes	Message Size (Bits)	Athena TeraFire Crypto Core Clock-Cycles	RISC-V CPU Clock-Cycles
Instantiate: strength, s=256, 384-bit nonce, 384-bit personalization string	—	18221	3076
Reseed: no additional input, s=256	—	13585	1056
Reseed: 384-bit additional input, s=256	—	15922	995
Generate: (no additional input), prediction resistance enabled, s=256	128	15262	1672
	8K	27169	7837
Generate: (no additional input), prediction resistance disabled, s=256	128	2138	781
	8K	14045	7837
Generate: (384-bit additional input), prediction resistance enabled, s=256	128	21299	1620
	8K	33206	8563
Generate: (384-bit additional input), prediction resistance disabled, s=256	128	11657	1507
	8K	23564	8563
Un-instantiate	—	761	502

© 2024 Microchip Technology Inc. and its subsidiaries

5. Revision History

Revision	Date	Description
B	11/2024	• Added RTPF500ZT to Table 2-1. • Updated silicon status to production in table Table 2-1. • Added Libero Production Timing and Power version to Table 2-2. • Added two notes to Table 3-4 to explain how weak pull-up and weak pull-down resistors should be calculated. • Corrected Note 6 of Table 3-5. The maximum time allowed was listed as 300 µs and should be 300 ns. • Added Note 3 to Absolute Maximum Rating. • Updated Note 7 under Recommended Operating Conditions. • Added recommended transceiver supply voltage specification (V_{DDA}) for RTPF500ZT in Table 3-2. • Added junction temperature footnote in Table 3-2. • Updated RC Oscillators. • Updated notes in the following sections to clarify VDDA mode requirements in RTPF500T and RTPF500ZT: Table 4-32, Table 4-35, Table 4-36, Table 4-37, Table 4-38,Table 4-39, Table 4-40, Table 4-45, Table 4-54, Table 4-58. • Added note 1 to all tables in the following sections to clarify VDDA mode requirements in RTPF500ZT: PCI Express, 10GbE (10GBASE-R and 10GBASE-KR), 1GbE (1000BASE-X) , SGMII and QSGMII, CPRI, Display Port, Serial RapidIO, SDI, Table 4-59, HiGig and HiGig+, HiGig II, FireWire IEEE® 1394 • Added Min, Max, Condition and updated Differential termination value in Table 4-34. • Changed “CDR PPM tolerance” to “CDR frequency tolerance” for better clarity in Receiver Performance. • Updated VDDI3 power-up requirements in section Power-Up to Functional Timing and I/O-Related Supplies. • Updated notes under Power-On (Cold) Reset Initialization Sequence. • Updated SPI Switching Characteristics. • Added a column to Table 4-71 to correlate individual digest times to the condensed digest times in Libero. • Authentication Service IDs were swapped. Table 4-77 was updated. • Updated the footnote regarding VDDA in Table 4-90. • Clarified Note 1 and condition in DEVRST_N Electrical Characteristics. • Updated Table 4-103 to support the full military range. • Clarified table headers and notes in section TeraFire® 5200B Throughput Characteristics • Redirected the Device Offering list to a separate document entitled Radiation-Tolerant PolarFire® FPGA Product Overview.
A	10/2021	Initial Revision

© 2024 Microchip Technology Inc. and its subsidiaries

Microchip Information

Trademarks

The Microchip name and logo, the Microchip logo, Adaptec, AVR, AVR logo, AVR Freaks, BesTime, BitCloud, CryptoMemory, CryptoRF, dsPIC, flexPWR, HELDO, IGLOO, JukeBlox, KeeLoq, Kleer, LANCheck, LinkMD, maXStylus, maXTouch, MediaLB, megaAVR, Microsemi, Microsemi logo, MOST, MOST logo, MPLAB, OptoLyzer, PIC, picoPower, PICSTART, PIC32 logo, PolarFire, Prochip Designer, QTouch, SAM-BA, SenGenuity, SpyNIC, SST, SST Logo, SuperFlash, Symmetricom, SyncServer, Tachyon, TimeSource, tinyAVR, UNI/O, Vectron, and XMEGA are registered trademarks of Microchip Technology Incorporated in the U.S.A. and other countries.

AgileSwitch, ClockWorks, The Embedded Control Solutions Company, EtherSynch, Flashtec, Hyper Speed Control, HyperLight Load, Libero, motorBench, mTouch, Powermite 3, Precision Edge, ProASIC, ProASIC Plus, ProASIC Plus logo, Quiet-Wire, SmartFusion, SyncWorld, TimeCesium, TimeHub, TimePictra, TimeProvider, and ZL are registered trademarks of Microchip Technology Incorporated in the U.S.A.

Adjacent Key Suppression, AKS, Analog-for-the-Digital Age, Any Capacitor, AnyIn, AnyOut, Augmented Switching, BlueSky, BodyCom, Clockstudio, CodeGuard, CryptoAuthentication, CryptoAutomotive, CryptoCompanion, CryptoController, dsPICDEM, dsPICDEM.net, Dynamic Average Matching, DAM, ECAN, Espresso T1S, EtherGREEN, EyeOpen, GridTime, IdealBridge, IGaT, In-Circuit Serial Programming, ICSP, INICnet, Intelligent Paralleling, IntelliMOS, Inter-Chip Connectivity, JitterBlocker, Knob-on-Display, MarginLink, maxCrypto, maxView, memBrain, Mindi, MiWi, MPASM, MPF, MPLAB Certified logo, MPLIB, MPLINK, mSiC, MultiTRAK, NetDetach, Omniscient Code Generation, PICDEM, PICDEM.net, PICkit, PICtail, Power MOS IV, Power MOS 7, PowerSmart, PureSilicon, QMatrix, REAL ICE, Ripple Blocker, RTAX, RTG4, SAM-ICE, Serial Quad I/O, simpleMAP, SimpliPHY, SmartBuffer, SmartHLS, SMART-I.S., storClad, SQI, SuperSwitcher, SuperSwitcher II, Switchtec, SynchroPHY, Total Endurance, Trusted Time, TSHARC, Turing, USBCheck, VariSense, VectorBlox, VeriPHY, ViewSpan, WiperLock, XpressConnect, and ZENA are trademarks of Microchip Technology Incorporated in the U.S.A. and other countries.

SQTP is a service mark of Microchip Technology Incorporated in the U.S.A.

The Adaptec logo, Frequency on Demand, Silicon Storage Technology, and Symmcom are registered trademarks of Microchip Technology Inc. in other countries.

GestIC is a registered trademark of Microchip Technology Germany II GmbH & Co. KG, a subsidiary of Microchip Technology Inc., in other countries.

All other trademarks mentioned herein are property of their respective companies.

© 2024, Microchip Technology Incorporated and its subsidiaries. All Rights Reserved.

ISBN: 978-1-6683-0283-5

Legal Notice

This publication and the information herein may be used only with Microchip products, including to design, test, and integrate Microchip products with your application. Use of this information in any other manner violates these terms. Information regarding device applications is provided only for your convenience and may be superseded by updates. It is your responsibility to ensure that your application meets with your specifications. Contact your local Microchip sales office for additional support or, obtain additional support at www.microchip.com/en-us/support/design-help/client-support-services.

THIS INFORMATION IS PROVIDED BY MICROCHIP "AS IS". MICROCHIP MAKES NO REPRESENTATIONS OR WARRANTIES OF ANY KIND WHETHER EXPRESS OR IMPLIED, WRITTEN OR ORAL, STATUTORY OR OTHERWISE, RELATED TO THE INFORMATION INCLUDING BUT NOT LIMITED TO ANY IMPLIED

WARRANTIES OF NON-INFRINGEMENT, MERCHANTABILITY, AND FITNESS FOR A PARTICULAR PURPOSE, OR WARRANTIES RELATED TO ITS CONDITION, QUALITY, OR PERFORMANCE.

IN NO EVENT WILL MICROCHIP BE LIABLE FOR ANY INDIRECT, SPECIAL, PUNITIVE, INCIDENTAL, OR CONSEQUENTIAL LOSS, DAMAGE, COST, OR EXPENSE OF ANY KIND WHATSOEVER RELATED TO THE INFORMATION OR ITS USE, HOWEVER CAUSED, EVEN IF MICROCHIP HAS BEEN ADVISED OF THE POSSIBILITY OR THE DAMAGES ARE FORESEEABLE. TO THE FULLEST EXTENT ALLOWED BY LAW, MICROCHIP'S TOTAL LIABILITY ON ALL CLAIMS IN ANY WAY RELATED TO THE INFORMATION OR ITS USE WILL NOT EXCEED THE AMOUNT OF FEES, IF ANY, THAT YOU HAVE PAID DIRECTLY TO MICROCHIP FOR THE INFORMATION.

Use of Microchip devices in life support and/or safety applications is entirely at the buyer's risk, and the buyer agrees to defend, indemnify and hold harmless Microchip from any and all damages, claims, suits, or expenses resulting from such use. No licenses are conveyed, implicitly or otherwise, under any Microchip intellectual property rights unless otherwise stated.

Microchip Devices Code Protection Feature

Note the following details of the code protection feature on Microchip products:

- Microchip products meet the specifications contained in their particular Microchip Data Sheet.
- Microchip believes that its family of products is secure when used in the intended manner, within operating specifications, and under normal conditions.
- Microchip values and aggressively protects its intellectual property rights. Attempts to breach the code protection features of Microchip product is strictly prohibited and may violate the Digital Millennium Copyright Act.
- Neither Microchip nor any other semiconductor manufacturer can guarantee the security of its code. Code protection does not mean that we are guaranteeing the product is "unbreakable". Code protection is constantly evolving. Microchip is committed to continuously improving the code protection features of our products.

© 2024 Microchip Technology Inc. and its subsidiaries

Mouser Electronics

Authorized Distributor

Click to View Pricing, Inventory, Delivery & Lifecycle Information:

Microchip:

RTPF500TS-CG1509B RTPF500TS-CG1509PROTO