Hardware description PTX105R-EB-ST-QFN56-POS/IoT

Panthronics AG

Exported on 05/15/2023

Panthronics Confidential

Table of Contents

1 Power supply: 4
2 USB Interface: 5
3 Interface switching: 6
4 PMOD: 7
5 Clocking: 8
6 Debugging: 9
7 Schematic: 10
8 Assembly: 11
9 PCB: 12
10 PDF: 14

Old Nomenclature: PTX105R EB v1.0

1 Power supply:

The board is powered via a USB-C connection.

The PTX105R can be operated in two voltage settings VBUS (5V) & VDCDC (5.4V) which can be selectedc by moving the jumper from JMP_VBUS to JMP_DCDC

The boards default is VBUS which is also the setting all compliance tests were done in.

Current consumption in continous field mode is ~360mA with VBUS and ~450mA with VDCDC

2 USB Interface:

The Usb Interface is handled by a CH340E USB<->UART bridge.

Drivers can be downloaded from the manufacturer homepage: here

3 Interface switching:

The eval board allows to switch between the 3 Interface supported by the PTX105R IC using the SIF1 / SIF2 jumpers:

SIF 1	SIF2	Interface	Picture of jumpersto be used:
0	0	SPI	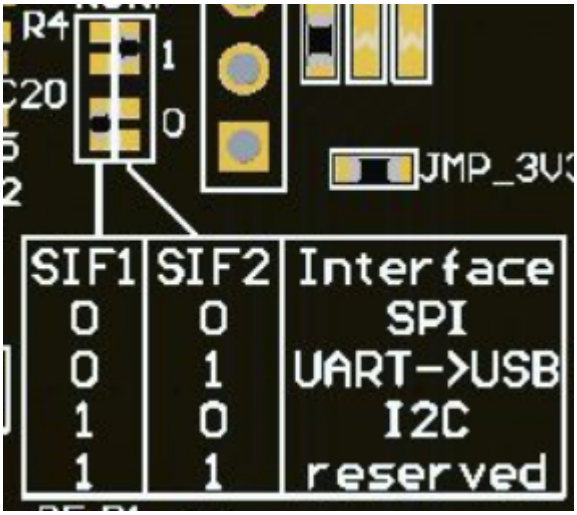
0	1	UART → USB	
1	0	I2C	

The UART Interface is connected to the USB bridge and can be accessed via the USB-C plug

4 PMOD:

All interfaces are also available via a PMOD 2x6pin connector (shich has to be soldered manually). The pinout follows the PMOD recommandation for SPI Interface. The PMOD connector allows connecting to a multitude of mcu demo boards. Example firmware is available for the TB-S3A1 board from renesas

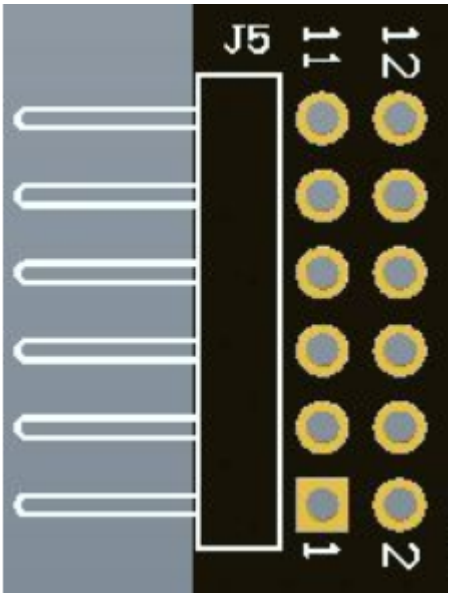

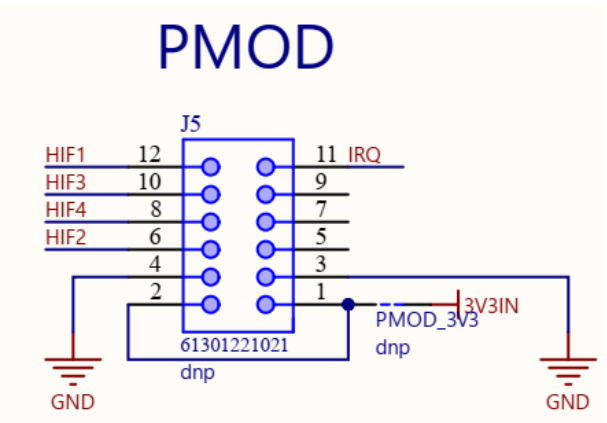

The 3.3V supply for the host mcu can also be provided by the Demo Board if Jumper PMOD_3V3 is placed

5 Clocking:

The PTX105R chips default clock source is a 27.12MHz crystal (Q1).

6 Debugging:

The PCB has 3 debug LEDs

2 for supply and 1 for UART communication:

7 Schematic:

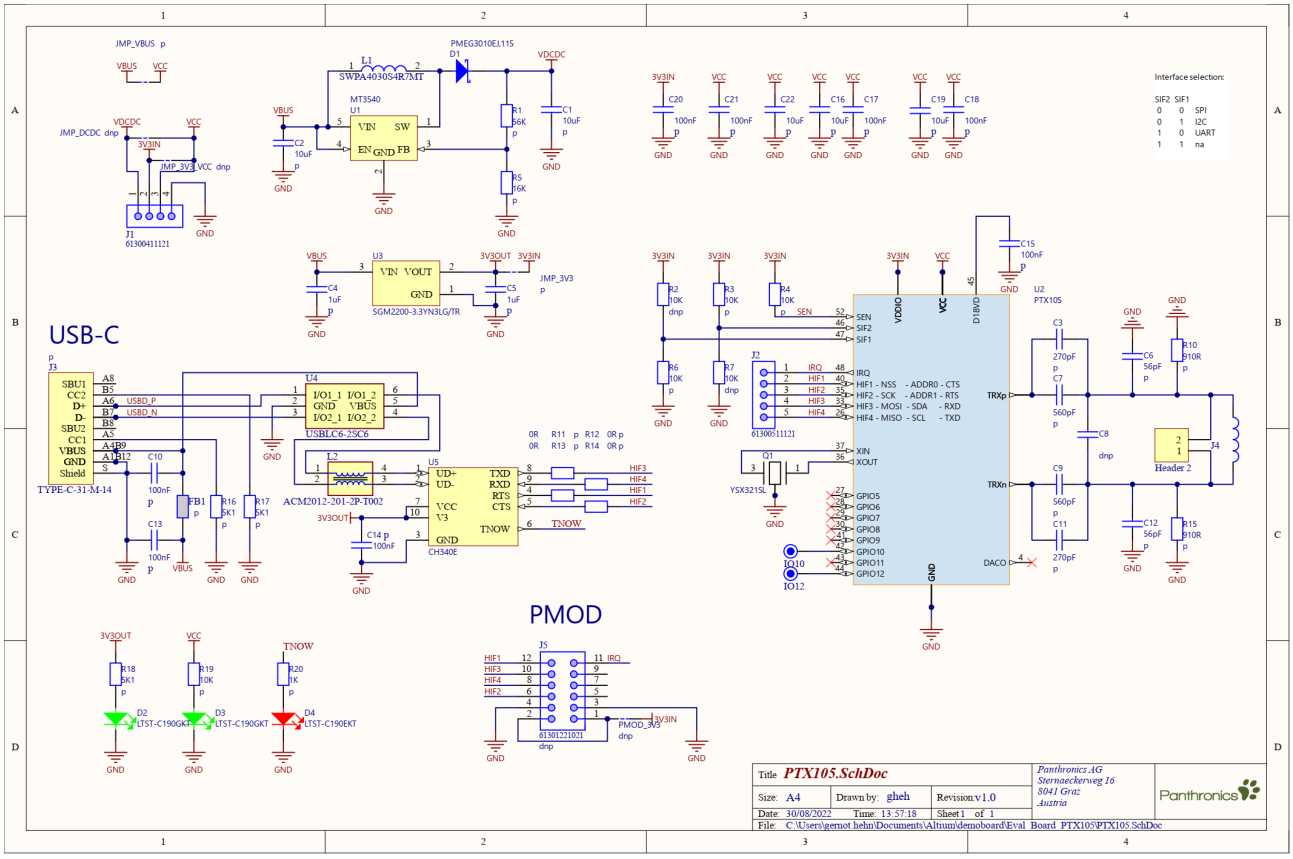
USB-C
PMOD
Interface selection:
SIF2 SIF1
0 0 SPI
0 1 I2C
1 0 UART
1 1 na
Title PTX105.SchDoc
Size: A4
Drawn by: gheh
Revision v1.0
Date: 30/08/2022
Time: 13:57:18
Sheet 1 of 1
File: C:\Users\gernot.hehn\Documents\Altium\demoboard\Eval_Board_PTX105\PTX105.SchDoc
Panthronics AG
Sternaeckerweg 16
8041 Graz
Austria
Panthronics

8 Assembly:

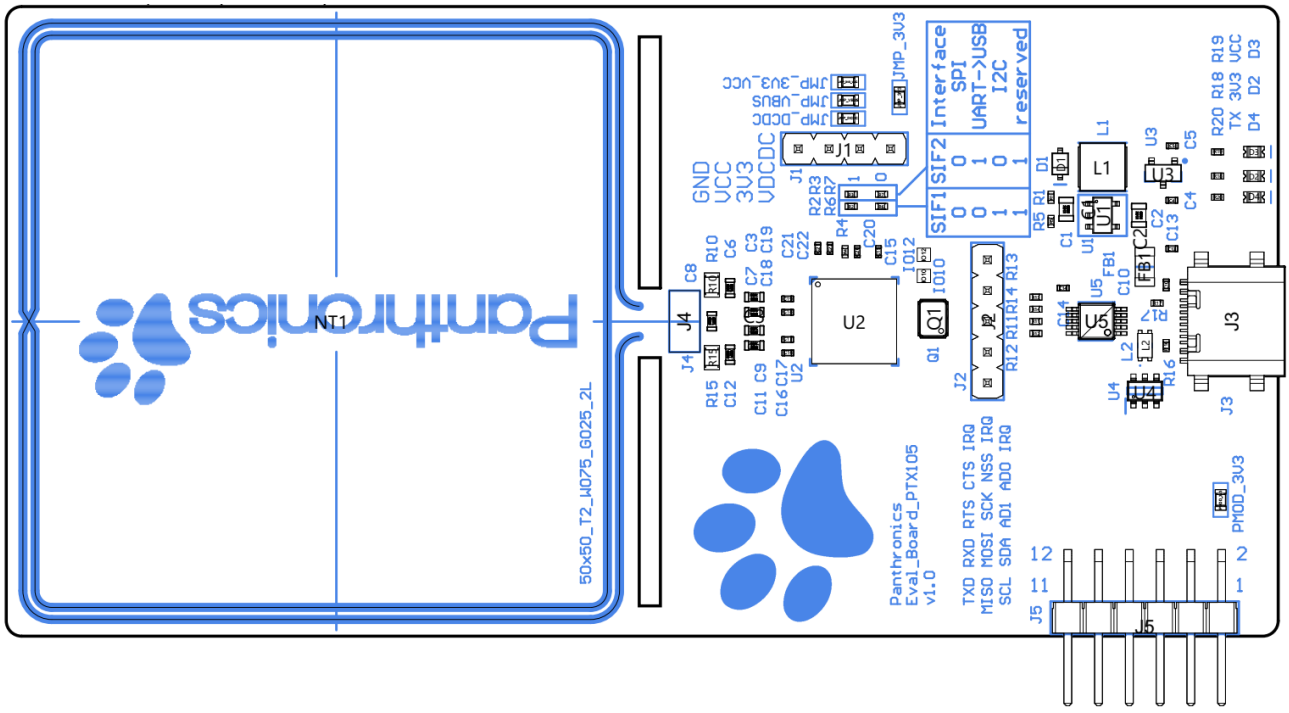
Panthronics
NT1
50x50_T2_W075_G025_2L
GND
VCC
3V3
VDCDC
JMP_3V3
JMP_3V3_VCC
JMP_VBUS
JMP_DCDC
J1
SIF1
SIF2
Interface
SPI
UART->USB
I2C
reserved
L1
U1
U2
U3
U4
U5
J2
J3
J4
J5
Q1
FB1
Panthronics
Eval_Board_PTX105
v1.0
TXD RXD RTS CTS IRQ
MISO MOSI SCK NSS IRQ
SCL SDA AD1 AD0 IRQ
PMOD_3V3
R20 R18 R19
TX 3V3 VCC
D4 D2 D3

9 PCB:

Panthronics
50x50_T2_W075_G025_2L
J4
C8
R15
R10
C12
C6
C11
C9
C7
C3
C18
C19
C16
C17
U2
C21
C22
R2
R3
R6
R7
R4
C20
C15
J1
GND
VCC
3V3
VDCDC
JMP_DCDC
JMP_VBUS
JMP_3V3_VCC
JMP_3V3
Panthronics

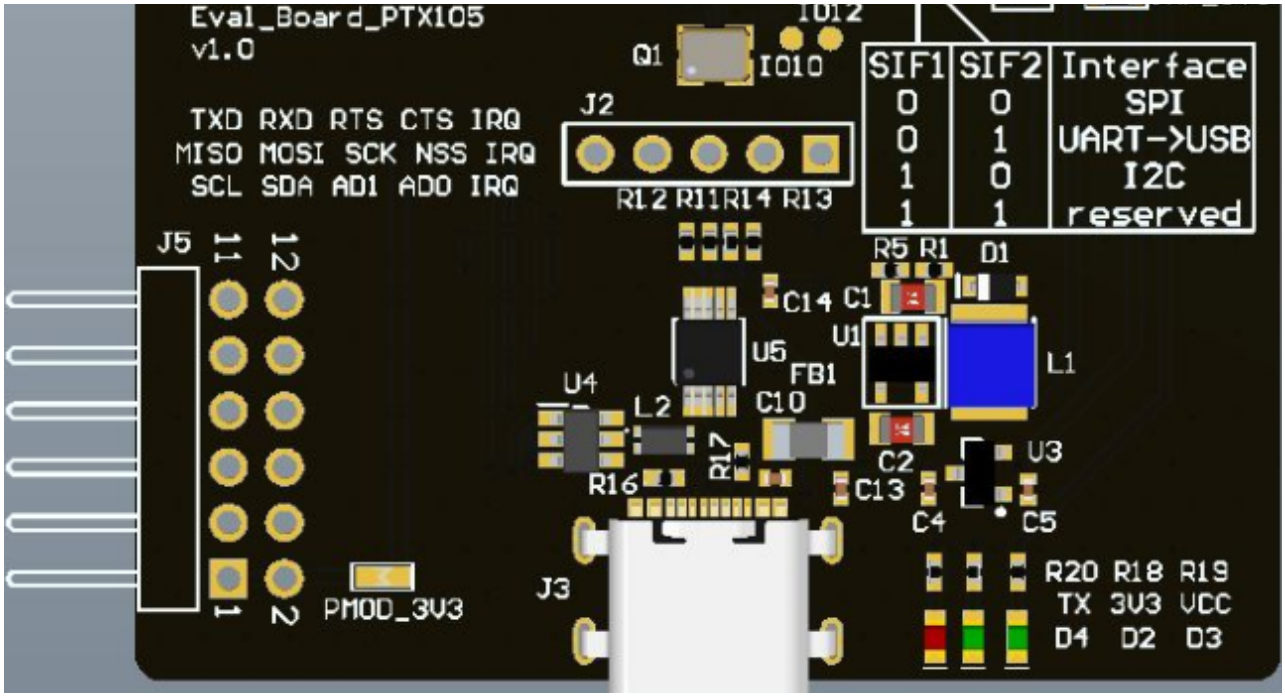
Eval_Board_PTX105
v1.0
TXD RXD RTS CTS IRQ
MISO MOSI SCK NSS IRQ
SCL SDA AD1 AD0 IRQ
Q1
J2
R12 R11 R14 R13
SIF1 SIF2 Interface
0 0 SPI
0 1 UART->USB
1 0 I2C
1 1 reserved
J5
R5 R1
D1
C14 C1
U1
U5
FB1
L1
U4
L2
C10
R17
R16
C2
C13
U3
C4
C5
J3
PMOD_3V3
R20 R18 R19
TX 3V3 VCC
D4 D2 D3

10 PDF:

Eval_Board_PTX105_v1.0.PDF

Copyrights & Disclaimer

The material herein may not be reproduced, adapted, merged, translated, stored, or used without the prior written consent of the copyright owner. Devices sold by Panthronics AG are covered by the warranty and patent indemnification provisions appearing in its General Terms of Trade. Panthronics AG makes no warranty, express, statutory, implied, or by description regarding the information set forth herein. Panthronics AG reserves the right to change specifications and prices at any time and without notice. Therefore, prior to designing this product into a system, it is necessary to check with Panthronics AG for the most up to date information. Applications requiring extended temperature range, unusual environmental requirements, or high reliability applications, such as military, medical life-support or life-sustaining equipment are not recommended. This product is provided by Panthronics AG “AS IS” and any express or implied warranties, including, but not limited to the implied warranties of merchantability and fitness for a particular purpose are disclaimed. Panthronics AG shall not be liable to recipient or any third party for any damages, including but not limited to personal injury, property damage, loss of profits, loss of use, interruption of business or indirect, special, incidental or consequential damages, of any kind, in connection with or arising out of the furnishing, performance or use of the technical data herein.

Legal Notice - Purchase of Panthronics ICs with MIFARE Classic® compatibility:

PTX100R IC offers modes to be compatible with MIFARE Classic® RFID tags, allowing to build MIFARE Classic® compatible reader systems. MIFARE® and MIFARE Classic® are trademarks of NXP B.V., High Tech Campus 60 NL-5656 AG EINDHOVEN, NL. Purchase of Panthronics' MIFARE Classic® compatible products does not provide a license of any NXP rights, in particular does not provide the right to use MIFARE® or MIFARE Classic® as a trademark to brand such systems.

Copyright Panthronics AG, Sternäckerweg 16, 8041, Graz

Ordering and Contact Information

Headquarters

Panthronics AG
Sternaeckerweg 16
A-8041, GRAZ
AUSTRIA

office@panthronics.com

Phone: +43 316 269 259

www.panthronics.com