Avant Evaluation Board

User Guide

FPGA-EB-02057-1.4

March 2024

Disclaimers

Lattice makes no warranty, representation, or guarantee regarding the accuracy of information contained in this document or the suitability of its products for any particular purpose. All information herein is provided AS IS, with all faults, and all associated risk is the responsibility entirely of the Buyer. The information provided herein is for informational purposes only and may contain technical inaccuracies or omissions, and may be otherwise rendered inaccurate for many reasons, and Lattice assumes no obligation to update or otherwise correct or revise this information. Products sold by Lattice have been subject to limited testing and it is the Buyer's responsibility to independently determine the suitability of any products and to test and verify the same. LATTICE PRODUCTS AND SERVICES ARE NOT DESIGNED, MANUFACTURED, OR TESTED FOR USE IN LIFE OR SAFETY CRITICAL SYSTEMS, HAZARDOUS ENVIRONMENTS, OR ANY OTHER ENVIRONMENTS REQUIRING FAIL-SAFE PERFORMANCE, INCLUDING ANY APPLICATION IN WHICH THE FAILURE OF THE PRODUCT OR SERVICE COULD LEAD TO DEATH, PERSONAL INJURY, SEVERE PROPERTY DAMAGE OR ENVIRONMENTAL HARM (COLLECTIVELY, "HIGH-RISK USES"). FURTHER, BUYER MUST TAKE PRUDENT STEPS TO PROTECT AGAINST PRODUCT AND SERVICE FAILURES, INCLUDING PROVIDING APPROPRIATE REDUDANCIES, FAIL-SAFE FEATURES, AND/OR SHUT-DOWN MECHANISMS. LATTICE EXPRESSLY DISCLAIMS ANY EXPRESS OR IMPLIED WARRANTY OF FITNESS OF THE PRODUCTS OR SERVICES FOR HIGH-RISK USES. The information provided in this document is proprietary to Lattice Semiconductor, and Lattice reserves the right to make any changes to the information in this document or to any products at any time without notice.

Inclusive Language

This document was created consistent with Lattice Semiconductor's inclusive language policy. In some cases, the language in underlying tools and other items may not yet have been updated. Please refer to Lattice's inclusive language FAQ 6878 for a cross reference of terms. Note in some cases such as register names and state names it has been necessary to continue to utilize older terminology for compatibility.

© 2023-2024 Lattice Semiconductor Corp. All Lattice trademarks, registered trademarks, patents, and disclaimers are as listed at www.latticesemi.com/legal.
All other brand or product names are trademarks or registered trademarks of their respective holders. The specifications and information herein are subject to change without notice.

Contents

Contents 3
Acronyms in This Document 6
1. Introduction 7
1.1. Avant-E Evaluation Board 7
1.2. Features 7
1.3. Avant-E Device 10
1.4. Applying Power to the Board 10
2. Jumper Definition 11
3. Power Scheme 18
4. Programming Platform Manager 2 21
4.1. JTAG Download Interface 21
4.2. Programming for Platform Manager 2 21
5. Programming Avant-E 23
5.1. JTAG Download Interface 23
5.2. Alternate JTAG Download Interface 23
5.3. Global Setting in Lattice Radiant software 24
5.4. Other Configuration Pins 27
5.5. Programming of Avant SRAM 27
5.6. Programming of Flash 29
5.7. Boot of Flash 32
6. Avant Clock Sources 33
7. Control Buses – I^2C, UART, and SPI 34
7.1. I^2C Topology 34
7.2. UART Topology 34
7.3. SPI Topology 34
8. LEDs, Switches and Segment Displays 35
8.1. DIP Switch 35
8.2. General Purpose Push Buttons 35
8.3. General Purpose LEDs 36
8.4. Segment Displays 36
9. Headers/Connectors and Avant Device Ball Mapping 37
9.1. FMC1 Connector 37
9.2. FMC2 Connector 40
9.3. Parallel FMC1 Configuration Header 44
9.4. Parallel FMC2 Configuration Header 44
9.5. Raspberry PI Board GPIO Header 45
9.6. External Flash Configuration Header 46
9.7. PMOD Header 46
9.8. Through Hole Extended Area Header 47
10. Software Requirements 49
11. Storage and Handling 49
12. Ordering Information 49
Appendix A. Avant Evaluation Board Schematics 50
Appendix B. Avant Evaluation Board Bill of Materials 71
Appendix C. Known Limitations 87
References 88
Technical Support Assistance 89
Revision History 90

© 2023-2024 Lattice Semiconductor Corp. All Lattice trademarks, registered trademarks, patents, and disclaimers are as listed at www.latticesemi.com/legal.
All other brand or product names are trademarks or registered trademarks of their respective holders. The specifications and information herein are subject to change without notice.

Figures

Figure 1.1. Top View of Avant-E Evaluation Board 8
Figure 1.2. Bottom View of Avant Evaluation Board 9
Figure 1.3. 12 V DC Power Supply....10
Figure 2.1. Top View of Avant Evaluation Board – Jumper Locations 11
Figure 3.1. Board Power Scheme (1) 18
Figure 3.2. Board Power Scheme (2) 19
Figure 4.1. Lattice Radiant Programmer 22
Figure 5.1. Configuration, UART and I^2C Architecture 23
Figure 5.2. Global Settings (1)....24
Figure 5.3. Global Settings (2)....25
Figure 5.4. Global Settings (3)....26
Figure 5.5. Radiant Programmer....28
Figure 5.6. Radiant Programmer – Device Properties 29
Figure 5.7. Radiant Programmer Interface 30
Figure 5.8. Radiant Programmer – Device Properties 31
Figure A.1. Title Page 50
Figure A.2. Block Diagram....51
Figure A.3. USB Interface 52
Figure A.4. Bank-0/1 Flash, LEDs, FMC & Raspberry Pi....53
Figure A.5. Bank-2 JTAG, UART, Config & Raspberry Pi 54
Figure A.6. Bank-3/4/5 FMC1 & FMC2....55
Figure A.7. HPC FMC1 56
Figure A.8. Bank-6 Switches, Buttons, LEDs & Extended Bank 57
Figure A.9. Bank-7/8/9 FMC2 58
Figure A.10. HPC FMC2 59
Figure A.11. LPDDR4 60
Figure A.12. Bank-12/13 PMODs, FMC2 & Raspberry Pi 61
Figure A.13. Bank-14 Segment Display & Raspberry Pi 62
Figure A.14. Bank Power....63
Figure A.15. Power Decoupling....64
Figure A.16. Power Supplies 1 65
Figure A.17. Power Supplies 2 66
Figure A.18. Ground....67
Figure A.19. Platform Manager 2....68
Figure A.20.Power Block Diagram....69
Figure A.21.Revision History....70

© 2023-2024 Lattice Semiconductor Corp. All Lattice trademarks, registered trademarks, patents, and disclaimers are as listed at www.latticesemi.com/legal.
All other brand or product names are trademarks or registered trademarks of their respective holders. The specifications and information herein are subject to change without notice.

Tables

Table 1.1. Board Power Supply 10
Table 2.1. Jumper Setting 12
Table 3.1. V_{CCIO} Supply Options 19
Table 3.2. Status LED Definition 20
Table 4.1. JTAG Connections 21
Table 4.2. JTAG Connections 21
Table 5.1. JTAG Connections 23
Table 5.2. Other Configuration Signals 27
Table 6.1. Clock Sources 33
Table 7.1. I^2C Bus Connections 34
Table 7.2. UART Bus Connections 34
Table 7.3. SPI Bus Connections 34
Table 8.1. DIP Switch Signals 35
Table 8.2. Push Button Switch Signals 35
Table 8.3. General Purpose LED Signals 36
Table 8.4. Segment Display 36
Table 9.1. FMC1 Pin Connections 37
Table 9.2. FMC2 Pin Connections 40
Table 9.3. Parallel FMC1 Configuration Header Pin Connections 44
Table 9.4. Parallel FMC2 Configuration Header Pin Connections 44
Table 9.5. Raspberry PI header Pin Connections 45
Table 9.6. SPI Flash Configuration Header Pin Connections 46
Table 9.7. PMOD Header Pin Connections 46
Table 9.8. Through Hole Extended Area Header Pin Connections 47
Table 12.1. Ordering Information 49

© 2023-2024 Lattice Semiconductor Corp. All Lattice trademarks, registered trademarks, patents, and disclaimers are as listed at www.latticesemi.com/legal.
All other brand or product names are trademarks or registered trademarks of their respective holders. The specifications and information herein are subject to change without notice.

Acronyms in This Document

A list of acronyms used in this document.

Acronym	Definition
AC/DC	Alternating Current and Direct Current
ADC	Analog-to-digital Converter
DIP	Dual Inline Package
ESD	Electro Static Discharge
FMC	FPGA Mezzanine Card
FPGA	Field Programmable Gate Array
FTDI	Future Technology Devices International
GPIO	General Purpose Input/Output
HPC	High Pin Connector
I2C	Inter-Integrated Circuit
I/O	Input/Output
JTAG	Joint Test Action Group
LED	Light Emitting Diode
LVDS	Low-Voltage Differential Signaling
OSC	Oscillator
PC	Personal Computer
PMOD	Peripheral Module
POT	Potentiometer
SerDes	Serializer/Deserializer
SMA	Subminiature Version A
SPI	Serial Peripheral Interface
UART	Universal Asynchronous Receiver Transmitter
USB	Universal Serial Bus

© 2023-2024 Lattice Semiconductor Corp. All Lattice trademarks, registered trademarks, patents, and disclaimers are as listed at www.latticesemi.com/legal.
All other brand or product names are trademarks or registered trademarks of their respective holders. The specifications and information herein are subject to change without notice.

1. Introduction

The Lattice Semiconductor Avant™-E Evaluation Board allows you to investigate and experiment with the features of the Avant-E Field Programmable Gate Array (FPGA). The features of the Avant-E Evaluation Board can assist you with the rapid prototyping and testing of your specific design. The Avant-E Evaluation Board is part of the Avant-E Evaluation Board Kit. This guide is intended to be referenced to demonstrate the Avant-E FPGA and introduce board resources.

The Avant-E Evaluation Board Kit includes the following:

- Avant-E Evaluation Board is pre-loaded with blinking lights demo design.
- USB-A to USB-B (Mini) cable for programming FPGA SRAM through a PC.
- 12 V AC/DC power adapter and international plug adapters.
- The Lattice Radiant® software download information.

The contents of this user guide include top-level functional descriptions of the various portions of the evaluation board, descriptions of the on-board headers, status indicators, push buttons and switches and a complete set of schematics.

1.1. Avant-E Evaluation Board

The Avant-E Evaluation Board features the Avant-E FPGA in the LFG1156 package. The board has the ability to expand the usability of the Avant-E FPGA with FMC HPC, PMOD, and Raspberry PI connectors. Easy-to-use board resources such as jumpers, LED indicators, push buttons and switches are available for user-defined applications.

Figure 1.1 shows the top view of the Avant-E Evaluation Board. Figure 1.2 shows the bottom view of the Avant-E Evaluation Board.

1.2. Features

The Avant-E Evaluation Board includes the following features:

- Avant-E FPGA (LAV-AT-E70-3LFG1156C).
- General purpose Input/Output (GPIO) breakout with 2 FMC, PMOD, and Raspberry PI connectors.
- A total of 95 wide-range I/O and 468 high-speed differential I/O (234 pairs) were extended onboard.
- USB-B (Mini) connection for device programming.
- On-board Boot Flash – 512 MB of Serial Peripheral Interface (SPI) Flash, with Single/Dual/Quad support.
- Eight input DIP switches, four push buttons, eight green LEDs, eight red LEDs and three seven-segment LEDs are available for designer configuration.
- Lattice Radiant® software programming support.
- Reference clock sources.
- Lattice Platform Manager 2 for board power management functions.

Caution: The Avant-E Evaluation Board has ESD-sensitive components. The ESD safe practices should be followed while handling and using the Avant-E Evaluation Board.

© 2023-2024 Lattice Semiconductor Corp. All Lattice trademarks, registered trademarks, patents, and disclaimers are as listed at www.latticesemi.com/legal.
All other brand or product names are trademarks or registered trademarks of their respective holders. The specifications and information herein are subject to change without notice.

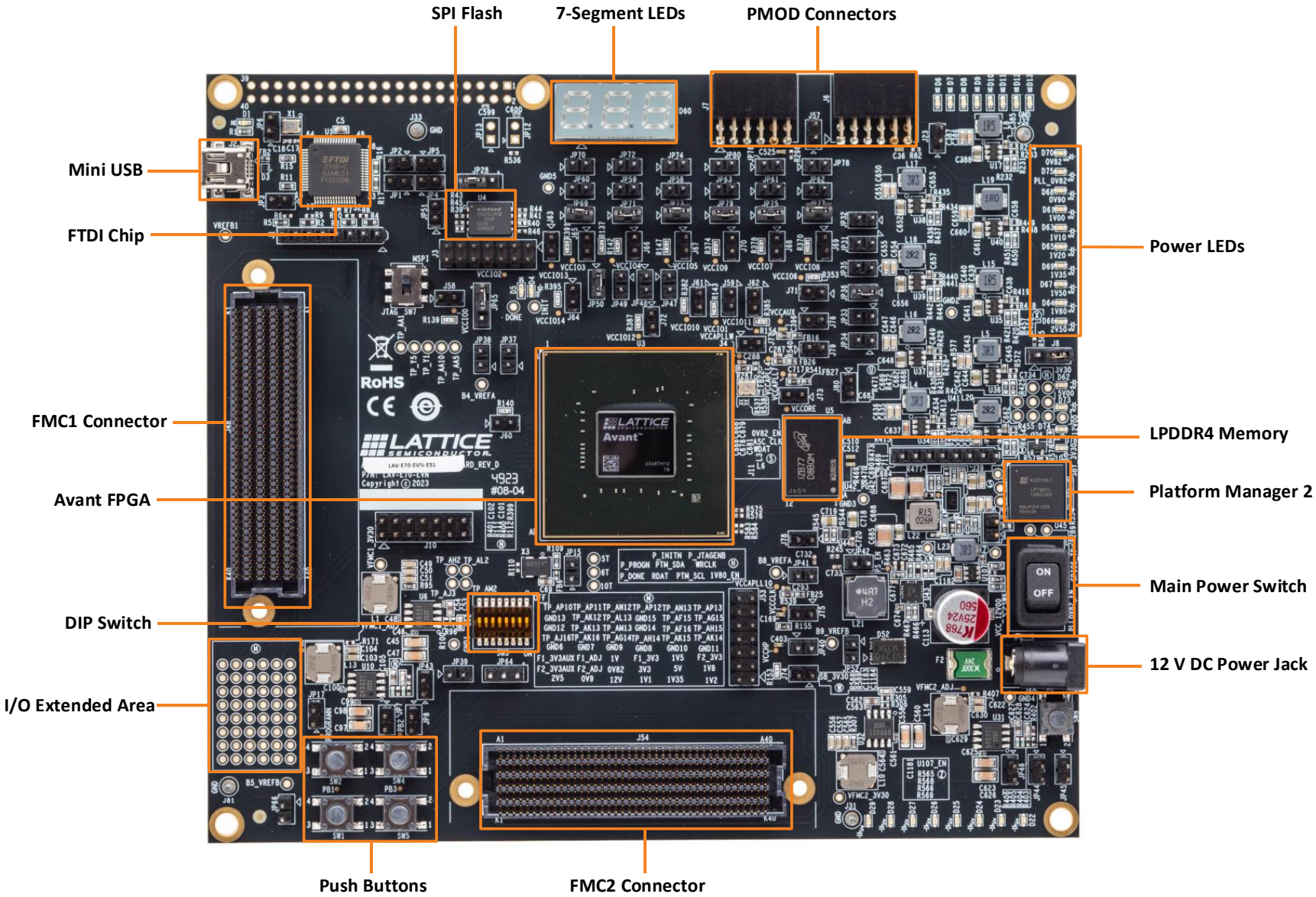

Figure 1.1. Top View of Avant-E Evaluation Board

© 2023-2024 Lattice Semiconductor Corp. All Lattice trademarks, registered trademarks, patents, and disclaimers are as listed at www.latticesemi.com/legal.
All other brand or product names are trademarks or registered trademarks of their respective holders. The specifications and information herein are subject to change without notice.

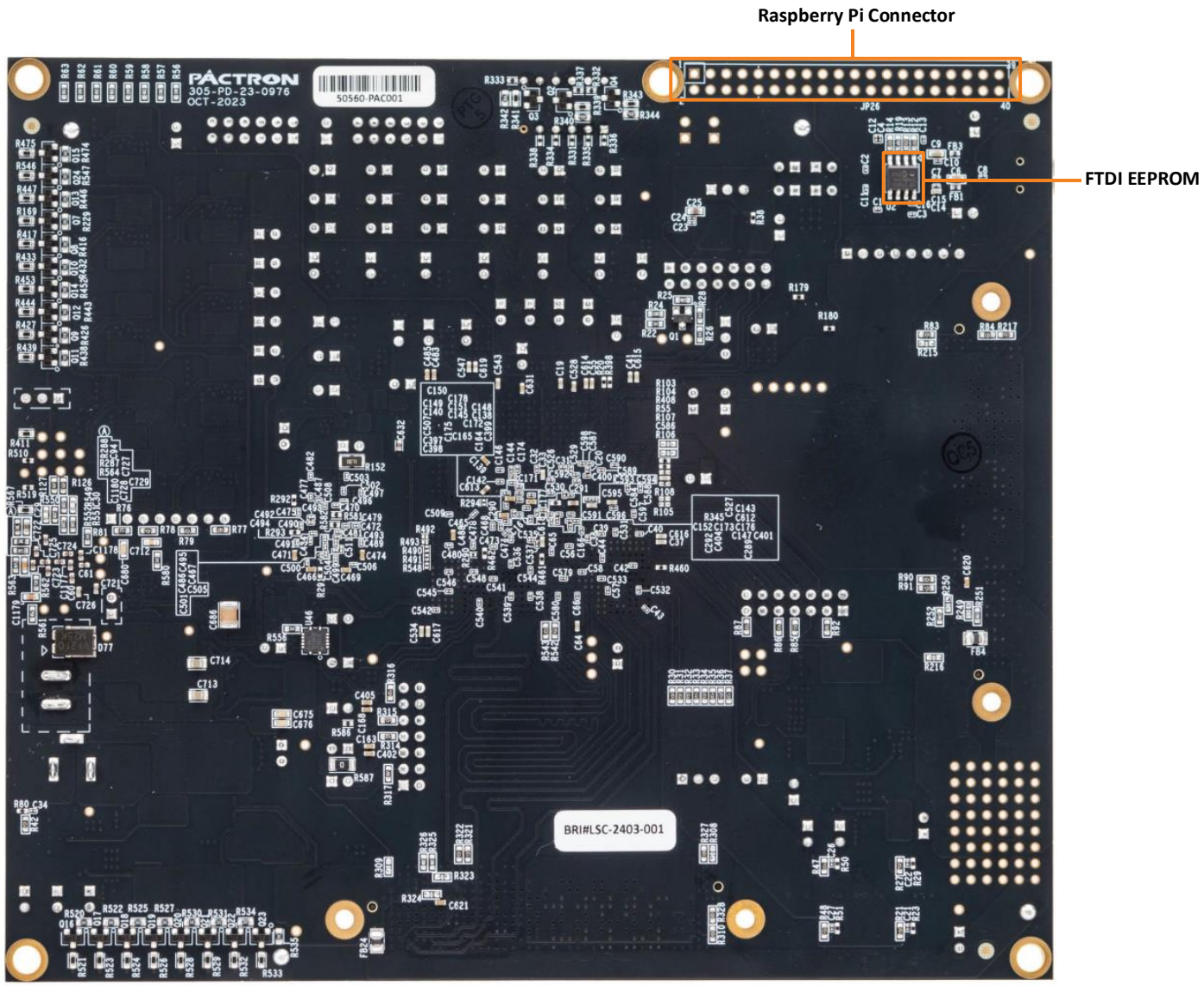

Figure 1.2. Bottom View of Avant Evaluation Board

© 2023-2024 Lattice Semiconductor Corp. All Lattice trademarks, registered trademarks, patents, and disclaimers are as listed at www.latticesemi.com/legal.
All other brand or product names are trademarks or registered trademarks of their respective holders. The specifications and information herein are subject to change without notice.

1.3. Avant-E Device

The Avant-E Evaluation Board features the Avant-E device in an LFG1156 package, also referred to as LAV-AT-E70-3LFG1156C. The low-power general purpose FPGA can be used in a wide range of applications across multiple markets and is optimized for bridging and processing needs in edge applications. For more information on the capabilities of Avant-E devices, see the Avant Platform Data Sheet Overview (FPGA-DS-02107) and the Avant Platform Data Sheet Specifications (FPGA-DS-02112).

1.4. Applying Power to the Board

The Avant-E Evaluation Board can be powered up using the 12 V AC/DC power adapter included with the kit. The power adapter should be connected to the power input jack J50, which is connected to fuse F2, as shown in Figure 1.3 and Table 1.1. The fuse can prevent the crash current from flowing into the internal circuits and causing serious damage. Power LEDs light up after connecting the 12 V DC power and toggling SW6 to the ON position to indicate that the board is getting the proper board voltages.

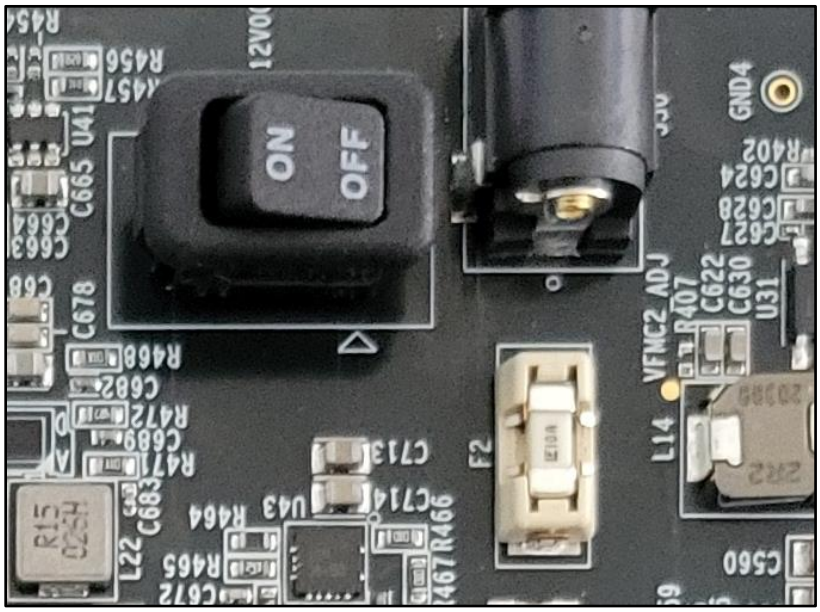

Figure 1.3. 12 V DC Power Supply

Table 1.1. Board Power Supply

Part Designator	Description
J50	12 V DC Input Supply Jack
F2	12 V DC Input Supply Fuse
SW6	ON/OFF Switch

© 2023-2024 Lattice Semiconductor Corp. All Lattice trademarks, registered trademarks, patents, and disclaimers are as listed at www.latticesemi.com/legal.
All other brand or product names are trademarks or registered trademarks of their respective holders. The specifications and information herein are subject to change without notice.

2. Jumper Definition

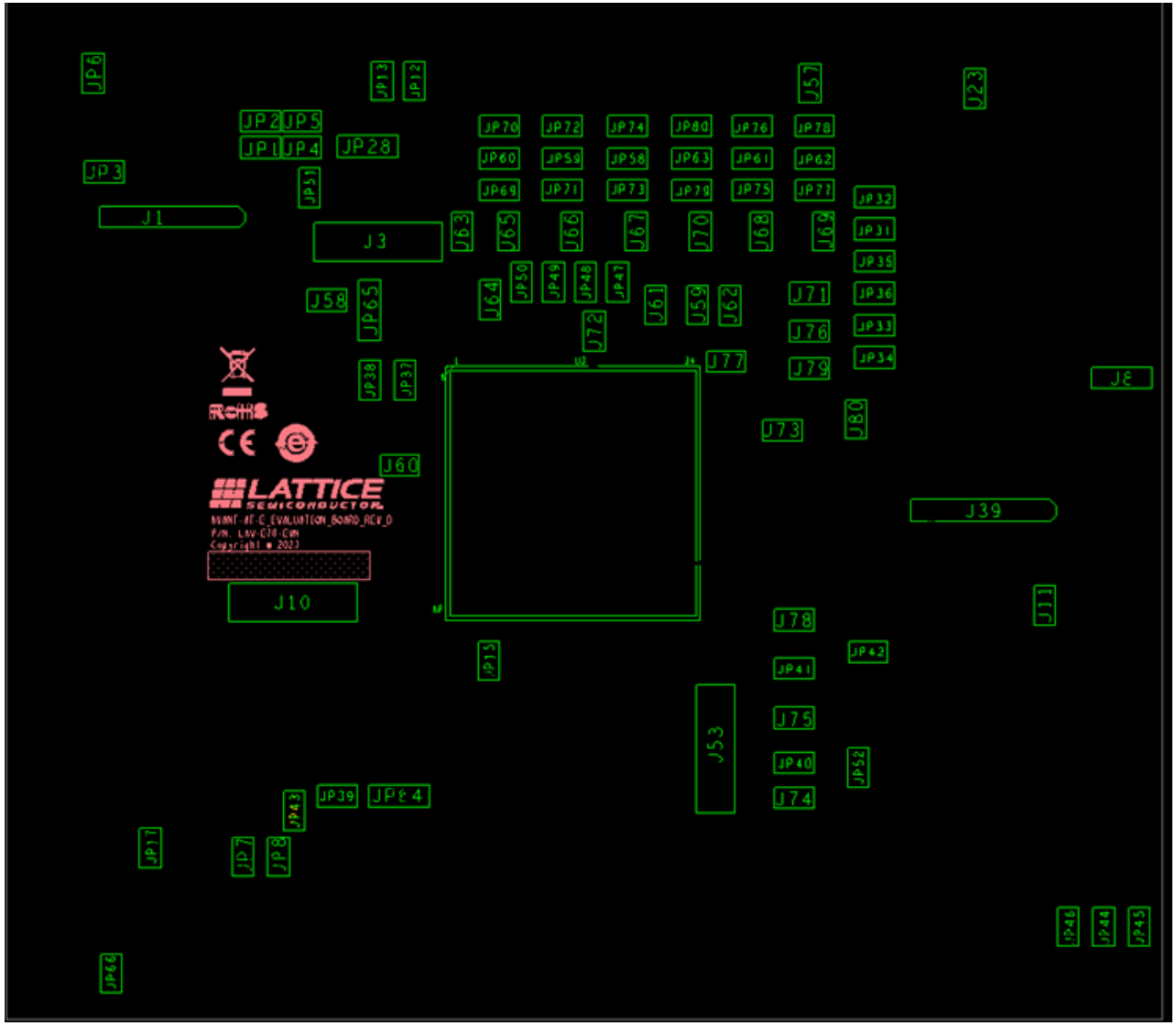

Figure 2.1. Top View of Avant Evaluation Board – Jumper Locations

© 2023-2024 Lattice Semiconductor Corp. All Lattice trademarks, registered trademarks, patents, and disclaimers are as listed at www.latticesemi.com/legal.
All other brand or product names are trademarks or registered trademarks of their respective holders. The specifications and information herein are subject to change without notice.

Table 2.1. Jumper Setting

Part Designator	Description	Setting	Default
J11	Platform Manager 2 (U45) Power	Open – No Power to Platform Manager 2 Close – Power to Platform Manager 2	Close
J23	Power Measurement Header for PMOD Header J6		
J57	Power Measurement Header for PMOD Header J7		
J58	Power Measurement Header for VCCIO0		
J59	Power Measurement Header for VCCIO1		
J60	Power Measurement Header for VCCIO2		
J61	Power Measurement Header for VCCIO10		
J62	Power Measurement Header for VCCIO11		
J63	Power Measurement Header for VCCIO13		
J64	Power Measurement Header for VCCIO14		
J65	Power Measurement Header for VCCIO3		
J66	Power Measurement Header for VCCIO4		
J67	Power Measurement Header for VCCIO5		
J68	Power Measurement Header for VCCIO7		
J69	Power Measurement Header for VCCIO8		
J70	Power Measurement Header for VCCIO9		
J71	Power Measurement Header for VCCIO6		
J72	Power Measurement Header for VCCIO12		
J73	Power Measurement Header for Avant VCC		
J74	Power Measurement Header for Avant VCCHP		
J75	Power Measurement Header for Avant VCCCLK		
J76	Power Measurement Header for Avant VCCAUX		
J77	Power Measurement Header for Avant VCCAPLLW		
J78	Power Measurement Header for Avant VCCAPLL10		
J79	Power Measurement Header for Avant VCCAPLL4		
J80	Power Measurement Header for Avant VCCAPLL7		
JP1, JP2	FTDI UART Debug	Open – UART bus unconnected Close – UART bus connected	Close
JP3	FTDI Reset	Open – FTDI active Close – Holds FTDI in reset	Open
JP4, JP5	FTDI I^2C	Open – I^2C bus unconnected Close – I^2C bus connected	Open
JP6	FTDI 12 MHz Oscillator Jumper	Open – 12 MHz oscillator goes only to FTDI chip Close – 12 MHz oscillator goes to FTDI chip & ball U3 of FPGA through JP65	Open
JP7	JP7, JP8 & JP43 are used to select U10 Voltage Output	JP7 – Open, JP8 – Open, JP43 – Open: U10 Output = 1.5 V JP7 – Open, JP8 – Close, JP43 – Open: U10 Output = 1.8 V JP7 – Close, JP8 – Open, JP43 – Open: U10 Output = 2.5 V JP7 – Open, JP8 – Open, JP43 – Close: U10 Output = 3.3 V	Open

© 2023-2024 Lattice Semiconductor Corp. All Lattice trademarks, registered trademarks, patents, and disclaimers are as listed at www.latticesemi.com/legal.
All other brand or product names are trademarks or registered trademarks of their respective holders. The specifications and information herein are subject to change without notice.

Part Designator	Description	Setting	Default
JP8	JP7, JP8 & JP43 are used to select U10 Voltage Output	JP7 – Open, JP8 – Open, JP43 – Open: U10 Output = 1.5 V JP7 – Open, JP8 – Close, JP43 – Open: U10 Output = 1.8 V JP7 – Close, JP8 – Open, JP43 – Open: U10 Output = 2.5 V JP7 – Open, JP8 – Open, JP43 – Close: U10 Output = 3.3 V	Close
JP12	Raspberry PI Connector (JP26) Power	Open – Raspberry PI self-power Close – 3.3 V supplied to Raspberry PI connector	Open
JP13	Raspberry PI Connector (JP26) Power	Open – Raspberry PI self-power Close – 5.0 V supplied to Raspberry PI connector	Open
JP15	125 MHz OSC (X3) Standby	Open – OSC Enabled Close – OSC in Standby	Open
JP17	PROGRAMN Pull-down Jumper	Open – MSPI boot mode Close – Secondary configuration mode	Open
JP28	Flash Power Source	1–2 – Flash (U4) powered by VCCIO1_IN 2–3 – Flash (U4) powered by VCC_3V30	2–3
JP31	Avant Bank 6 Power Select (VCCIO6)	JP31, JP32, JP33, JP34, JP35 & JP36 select voltage to VCCIO6. Only one of these jumpers should be inserted. Open – VCCIO6 voltage based on JP32, JP33, JP34, JP35 & JP36 settings. Close – VCCIO6 = 0.9 V	Open
JP32	Avant Bank 6 Power Select (VCCIO6)	JP31, JP32, JP33, JP34, JP35 & JP36 select voltage to VCCIO6. Only one of these jumpers should be inserted. Open – VCCIO6 voltage based on JP31, JP33, JP34, JP35 & JP36 settings. Close – VCCIO6 = 1.0 V	Open
JP33	Avant Bank 6 Power Select (VCCIO6)	JP31, JP32, JP33, JP34, JP35 & JP36 select voltage to VCCIO6. Only one of these jumpers should be inserted. Open – VCCIO6 voltage based on JP31, JP32, JP34, JP35 & JP36 settings. Close – VCCIO6 = 1.1 V	Open
JP34	Avant Bank 6 Power Select (VCCIO6)	JP31, JP32, JP33, JP34, JP35 & JP36 select voltage to VCCIO6. Only one of these jumpers should be inserted. Open – VCCIO6 voltage based on JP31, JP32, JP33, JP35 & JP36 settings. Close – VCCIO6 = 1.35 V	Open
JP35	Avant Bank 6 Power Select (VCCIO6)	JP31, JP32, JP33, JP34, JP35 & JP36 select voltage to VCCIO6. Only one of these jumpers should be inserted. Open – VCCIO6 voltage based on JP31, JP32, JP33, JP34 & JP36 settings. Close – VCCIO6 = 1.5 V	Open
JP36	Avant Bank 6 Power Select (VCCIO6)	JP31, JP32, JP33, JP34, JP35 & JP36 select voltage to VCCIO6. Only one of these jumpers should be inserted. Open – VCCIO6 voltage based on JP31, JP32, JP33, JP34 & JP35 settings. Close – VCCIO6 = 1.8 V	Close

© 2023-2024 Lattice Semiconductor Corp. All Lattice trademarks, registered trademarks, patents, and disclaimers are as listed at www.latticesemi.com/legal.
All other brand or product names are trademarks or registered trademarks of their respective holders. The specifications and information herein are subject to change without notice.

Part Designator	Description	Setting	Default
JP37	FMC1 Reference Voltage	Open – Leaves FMC1 VREF_A_M2C (J48D.H1) pin open Close – Connects Avant ball AA11 to FMC1 VREF_A_M2C (J48D.H1)	Open
JP38	FMC1 Reference Voltage	Open – Leaves FMC1 VREF_A_M2C (J48D.H1) pin open Close – Connects Avant ball AG6 to FMC1 VREF_A_M2C (J48D.H1)	Open
JP39	FMC1 Reference Voltage	Open – Leaves FMC1 VREF_A_M2C (J48D.H1) pin open Close – Connects Avant ball AF13 to FMC1 VREF_A_M2C (J48D.H1)	Open
JP40	FMC2 Reference Voltage	Open – Leaves FMC2 VREF_A_M2C (J54D.H1) pin open Close – Connects Avant ball AF18 to FMC2 VREF_A_M2C (J54D.H1)	Open
JP41	FMC2 Reference Voltage	Open – Leaves FMC2 VREF_A_M2C (J54D.H1) pin open Close – Connects Avant ball AF27 to FMC2 VREF_A_M2C (J54D.H1)	Open
JP42	FMC2 Reference Voltage	Open – Leaves FMC2 VREF_A_M2C (J54D.H1) pin open Close – Connects Avant ball AF24 to FMC2 VREF_A_M2C (J54D.H1)	Open
JP43	JP7, JP8 & JP43 are used to select U10 Voltage Output	JP7 – Open, JP8 – Open, JP43 – Open: U10 Output = 1.5 V JP7 – Open, JP8 – Close, JP43 – Open: U10 Output = 1.8 V JP7 – Close, JP8 – Open, JP43 – Open: U10 Output = 2.5 V JP7 – Open, JP8 – Open, JP43 – Close: U10 Output = 3.3 V	Open
JP44	JP44, JP45 & JP46 are used to select U31 Voltage Output	JP44 – Open, JP45 – Open, JP46 – Open: U31 Output = 1.5 V JP44 – Open, JP45 – Open, JP46 – Close: U31 Output = 1.8 V JP44 – Close, JP45 – Open, JP46 – Open: U31 Output = 2.5 V JP44 – Open, JP45 – Close, JP46 – Open: U31 Output = 3.3 V	Open
JP45	JP44, JP45 & JP46 are used to select U31 Voltage Output	JP44 – Open, JP45 – Open, JP46 – Open: U31 Output = 1.5 V JP44 – Open, JP45 – Open, JP46 – Close: U31 Output = 1.8 V JP44 – Close, JP45 – Open, JP46 – Open: U31 Output = 2.5 V JP44 – Open, JP45 – Close, JP46 – Open: U31 Output = 3.3 V	Open

© 2023-2024 Lattice Semiconductor Corp. All Lattice trademarks, registered trademarks, patents, and disclaimers are as listed at www.latticesemi.com/legal.
All other brand or product names are trademarks or registered trademarks of their respective holders. The specifications and information herein are subject to change without notice.

Part Designator	Description	Setting	Default
JP46	JP44, JP45 & JP46 are used to select U31 Voltage Output	JP44 – Open, JP45 – Open, JP46 – Open: U31 Output = 1.5 V JP44 – Open, JP45 – Open, JP46 – Close: U31 Output = 1.8 V JP44 – Close, JP45 – Open, JP46 – Open: U31 Output = 2.5 V JP44 – Open, JP45 – Close, JP46 – Open: U31 Output = 3.3 V	Close
JP47	Avant Bank 12 Power Select (VCCIO12)	JP47, JP48, JP49 & JP50 select voltage to VCCIO12. Only one of these jumpers should be inserted. Open – VCCIO12 voltage based on JP48, JP49 & JP50 settings. Close – VCCIO12 = 1.2 V	Open
JP48	Avant Bank 12 Power Select (VCCIO12)	JP47, JP48, JP49 & JP50 select voltage to VCCIO12. Only one of these jumpers should be inserted. Open – VCCIO12 voltage based on JP47, JP49 & JP50 settings. Close – VCCIO12 = 1.8 V	Open
JP49	Avant Bank 12 Power Select (VCCIO12)	JP47, JP48, JP49 & JP50 select voltage to VCCIO12. Only one of these jumpers should be inserted. Open – VCCIO12 voltage based on JP47, JP48 & JP50 settings. Close – VCCIO12 = 2.5 V	Open
JP50	Avant Bank 12 Power Select (VCCIO12)	JP47, JP48, JP49 & JP50 select voltage to VCCIO12. Only one of these jumpers should be inserted. Open – VCCIO12 voltage based on JP48 & JP49 settings. Close – VCCIO12 = 1.2 V	Close
JP51	SPI Chip Select	Open – Flash (U4) CS# is only connected to pin 2 of J3 Header Close – Connects Avant MCSN ball (P7) to Flash (U4) CS# pin	Close
JP52	FMC2 Reference Voltage	Open – Leaves FMC2 VREF_B_M2C (J54E.K1) pin open Close – Connects Avant ball AF23 to FMC2 VREF_A_M2C (J54E.K1)	Open
JP58	Avant Bank 5 Power Select (VCCIO5)	• JP58, JP73 and JP74 select voltage to VCCIO5. Only one of these jumpers should be inserted. • Open – VCCIO5 based on JP73 and JP74 settings. • Close – VCCIO5 = 1.2 V	Open
JP59	Avant Bank 4 Power Select (VCCIO4)	• JP59, JP71 and JP72 select voltage to VCCIO4. Only one of these jumpers should be inserted. • Open – VCCIO4 based on JP71 and JP72 settings. • Close – VCCIO4 = 1.2 V.	Open

© 2023-2024 Lattice Semiconductor Corp. All Lattice trademarks, registered trademarks, patents, and disclaimers are as listed at www.latticesemi.com/legal.
All other brand or product names are trademarks or registered trademarks of their respective holders. The specifications and information herein are subject to change without notice.

Part Designator	Description	Setting	Default
JP60	Avant Bank 3 Power Select (VCCIO3)	• JP60, JP69 & JP70 select voltage to VCCIO3. Only one of these jumpers should be inserted. • Open – VCCIO3 based on JP69 & JP70 settings. • Close – VCCIO3 = 1.2 V	Open
JP61	Avant Bank 7 Power Select (VCCIO7)	• JP61, JP75 & JP76 select voltage to VCCIO7. Only one of these jumpers should be inserted. • Open – VCCIO7 based on JP75 & JP76 settings. • Close – VCCIO7 = 1.2 V	Open
JP62	Avant Bank 8 Power Select (VCCIO8)	• JP62, JP77 & JP78 select voltage to VCCIO8. Only one of these jumpers should be inserted. • Open – VCCIO8 based on JP77 & JP78 settings. • Close – VCCIO8 = 1.2 V	Open
JP63	Avant Bank 9 Power Select (VCCIO9)	• JP63, JP79 & JP80 select voltage to VCCIO9. Only one of these jumpers should be inserted. • Open – VCCIO9 based on JP79 & JP80 settings. • Close – VCCIO9 = 1.2 V	Open
JP65	Avant Ball U3	1–2 – Avant ball U3 connected to Raspberry Pi Header (JP26) pin 7 2–3 – Avant ball U3 connected to 12 MHz oscillator (X1) through JP6 jumper	1–2
JP66	FMC2 Reference Voltage	Open – Leaves FMC2 VREF_B_M2C (J54E.K1) pin open Close – Connects Avant ball AE13 to FMC2 VREF_B_M2C (J48D.H1)	Open
JP69	Avant Bank 3 Power Select (VCCIO3)	JP60, JP69 & JP70 select voltage to VCCIO3. Only one of these jumpers should be inserted. Open – VCCIO3 based on JP60 & JP70 settings. Close – VCCIO3 = 1.9 V	Close
JP70	Avant Bank 3 Power Select (VCCIO3)	JP60, JP69 & JP70 select voltage to VCCIO3. Only one of these jumpers should be inserted. Open – VCCIO3 based on JP60 & JP69 settings. Close – VCCIO3 = VFMC1_ADJ	Open
JP71	Avant Bank 4 Power Select (VCCIO4)	JP59, JP71 & JP72 select voltage to VCCIO4. Only one of these jumpers should be inserted. Open – VCCIO4 based on JP59 & JP72 settings. Close – VCCIO4 = 1.8 V	Close
JP72	Avant Bank 4 Power Select (VCCIO4)	JP59, JP71 & JP72 select voltage to VCCIO4. Only one of these jumpers should be inserted. Open – VCCIO4 based on JP59 & JP71 settings. Close – VCCIO4 = VFMC1_ADJ	Open
JP73	Avant Bank 5 Power Select (VCCIO5)	JP58, JP73 & JP74 select voltage to VCCIO5. Only one of these jumpers should be inserted. Open – VCCIO5 based on JP58 & JP74 settings. Close – VCCIO5 = 1.8 V	Close

© 2023-2024 Lattice Semiconductor Corp. All Lattice trademarks, registered trademarks, patents, and disclaimers are as listed at www.latticesemi.com/legal.
All other brand or product names are trademarks or registered trademarks of their respective holders. The specifications and information herein are subject to change without notice.

Part Designator	Description	Setting	Default
JP74	Avant Bank 5 Power Select (VCCIO5)	JP58, JP73 & JP74 select voltage to VCCIO5. Only one of these jumpers should be inserted. Open – VCCIO5 based on JP58 & JP73 settings. Close – VCCIO5 = VFMC1_ADJ	Open
JP75	Avant Bank 7 Power Select (VCCIO7)	JP61, JP75 & JP76 select voltage to VCCIO7. Only one of these jumpers should be inserted. Open – VCCIO7 based on JP61 & JP76 settings. Close – VCCIO7 = 1.8 V	Close
JP76	Avant Bank 7 Power Select (VCCIO7)	JP61, JP75 & JP76 select voltage to VCCIO7. Only one of these jumpers should be inserted. Open – VCCIO7 based on JP61 & JP75 settings. Close – VCCIO7 = VFMC2_ADJ	Open
JP77	Avant Bank 8 Power Select (VCCIO8)	JP62, JP77 & JP78 select voltage to VCCIO8. Only one of these jumpers should be inserted. Open – VCCIO8 based on JP62 & JP78 settings. Close – VCCIO8 = 1.8 V	Close
JP78	Avant Bank 8 Power Select (VCCIO8)	JP62, JP77 & JP78 select voltage to VCCIO8. Only one of these jumpers should be inserted. Open – VCCIO8 based on JP62 & JP77 settings. Close – VCCIO8 = VFMC2_ADJ	Open
JP79	Avant Bank 9 Power Select (VCCIO9)	JP63, JP79 & JP80 select voltage to VCCIO9. Only one of these jumpers should be inserted. Open – VCCIO9 based on JP63 & JP80 settings. Close – VCCIO9 = 1.8 V	Close
JP80	Avant Bank 9 Power Select (VCCIO9)	JP63, JP79 & JP80 select voltage to VCCIO9. Only one of these jumpers should be inserted. Open – VCCIO9 based on JP63 & JP79 settings. Close – VCCIO9 = VFMC2_ADJ	Open

© 2023-2024 Lattice Semiconductor Corp. All Lattice trademarks, registered trademarks, patents, and disclaimers are as listed at www.latticesemi.com/legal.
All other brand or product names are trademarks or registered trademarks of their respective holders. The specifications and information herein are subject to change without notice.

3. Power Scheme

The Avant Evaluation Board has a majority of on-board regulators powered by 12 V and 5 V power. Refer to Appendix A. Avant Evaluation Board Schematics to see the details of these power supply options.
Figure 3.1 and Figure 3.2 show the high-level power supply architecture of the board. Table 3.1 shows the voltage options available for various V_{CCIO} supplies.

The Avant Evaluation Board has two FMC connectors, designated as FMC1 and FMC2. The VFMC1_ADJ and VFMC2_ADJ power supplies are required for the two FMC connectors according to the FMC standard. You can set the power output level by changing the jumpers (JP7, JP8, and JP43) for FMC1 and (JP44, JP45, and JP46) for FMC2.

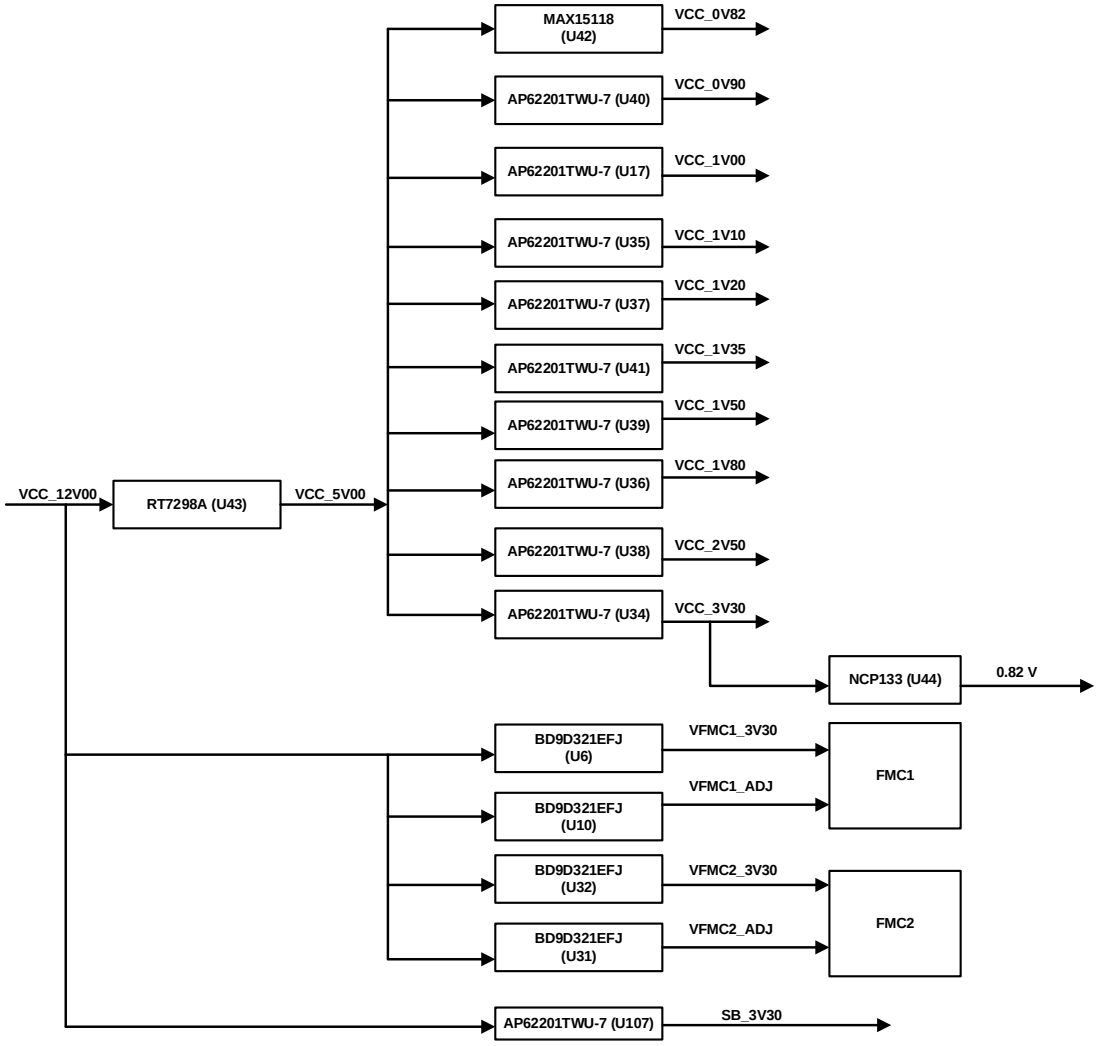

Figure 3.1. Board Power Scheme (1)

© 2023-2024 Lattice Semiconductor Corp. All Lattice trademarks, registered trademarks, patents, and disclaimers are as listed at www.latticesemi.com/legal.
All other brand or product names are trademarks or registered trademarks of their respective holders. The specifications and information herein are subject to change without notice.

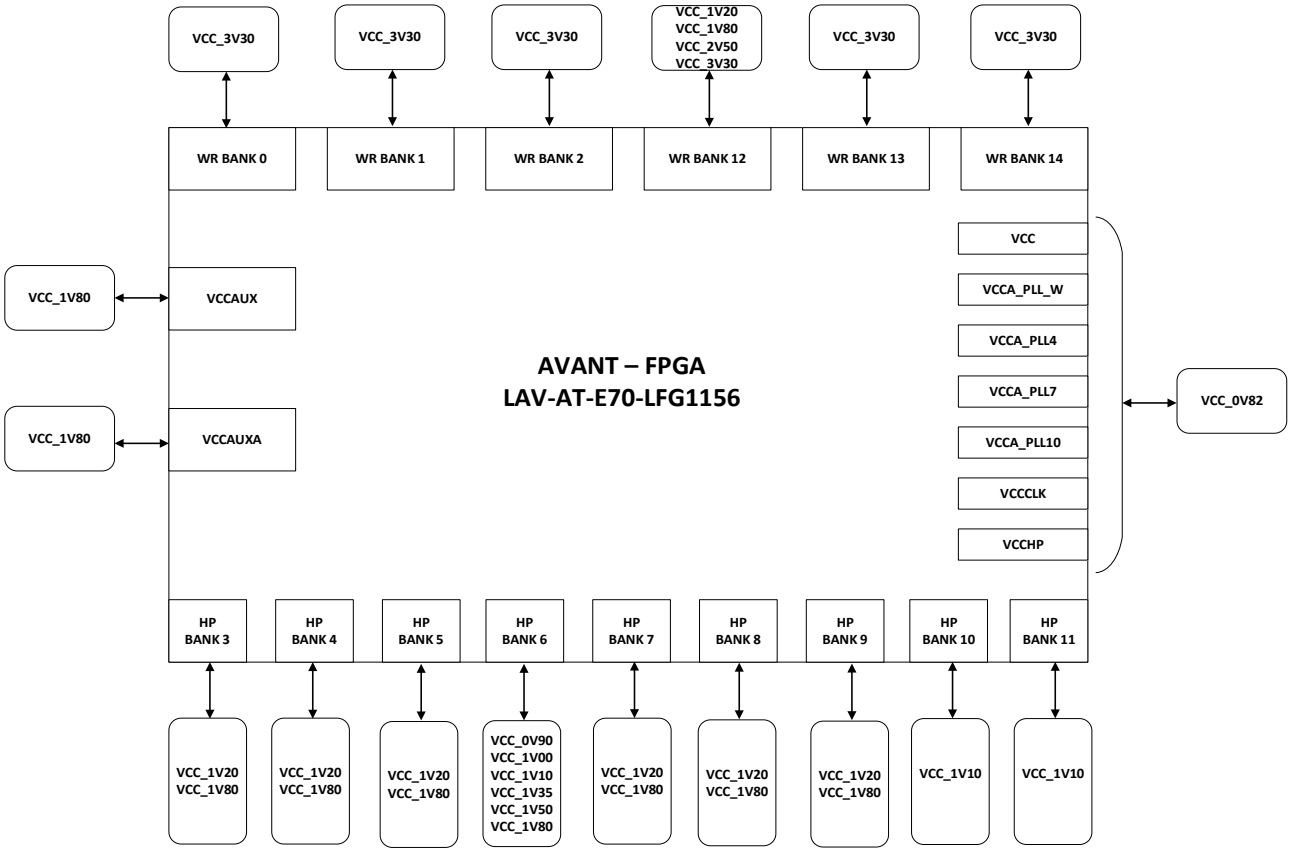

Figure 3.2. Board Power Scheme (2)

Table 3.1. V_{CCIO} Supply Options

V_{CCIO} Bank	3.30 V	2.50 V	1.80 V	1.50 V	1.35 V	1.20 V	1.10 V	1.00 V	0.90 V	FMC_ADJ
V_{CCIO0}	Fixed	—	—	—	—	—	—	—	—	–
V_{CCIO1}	Fixed	—	—	—	—	—	—	—	—	–
V_{CCIO2}	Fixed	—	—	—	—	—	—	—	—	–
V_{CCIO3}	—	—	Default	—	—	Selectable	—	—	—	Selectable
V_{CCIO4}										
V_{CCIO5}										
V_{CCIO6}	Default		Selectable	Selectable	Selectable	—	Selectable	Selectable	Selectable	–
V_{CCIO7}	—	—	Default	—	—	Selectable	—	—	—	Selectable
V_{CCIO8}										
V_{CCIO9}										
V_{CCIO10}	—	—	—	—	—	—	Fixed	—	—	–
V_{CCIO11}	—	—	—	—	—	—	Fixed	—	—	–
V_{CCIO12}	Default	Selectable	Selectable	Selectable	—	—	—	—	—	–
V_{CCIO13}	Fixed	—	—	—	—	—	—	—	—	–
V_{CCIO14}	Fixed	—	—	—	—	—	—	—	—	–

© 2023-2024 Lattice Semiconductor Corp. All Lattice trademarks, registered trademarks, patents, and disclaimers are as listed at www.latticesemi.com/legal.
All other brand or product names are trademarks or registered trademarks of their respective holders. The specifications and information herein are subject to change without notice.

The Avant Evaluation Boards provide status LEDs to provide a visual indication of power status (Table 3.2).

Table 3.2. Status LED Definition

LED Designator	Color	Description
D1	Green	J2 USB connector
D61	Green	1.00 V power on
D62	Green	3.30 V power on
D63	Green	1.10 V power on
D64	Green	1.80 V power on
D65	Green	1.20 V power on
D66	Green	2.50 V power on
D67	Green	1.50 V power on
D68	Green	0.90 V power on
D69	Green	1.35 V power on
D70	Green	0.82 V to Avant V_{CC} and V_{CCCLK} power rails
D73	Green	5.00 V power on
D74	Green	12.00 V from external power source, J50
D75	Green	0.82 V to Avant VCCHP and VCCA_PLLx power rails

© 2023-2024 Lattice Semiconductor Corp. All Lattice trademarks, registered trademarks, patents, and disclaimers are as listed at www.latticesemi.com/legal.
All other brand or product names are trademarks or registered trademarks of their respective holders. The specifications and information herein are subject to change without notice.

4. Programming Platform Manager 2

4.1. JTAG Download Interface

J39 is a stand-alone, eight-pin JTAG header that can be used with an external Lattice Programming Cable (available separately) to interface with the Platform Manager 2 device. For details on the connection between the USB Programming Cable and J39, refer to the Programming Cables User Guide (FPGA-UG-02042). The JTAG connections for Platform Manager 2 are listed in Table 4.1.

Table 4.1. JTAG Connections

J39 Pin Number	JTAG Signal Name	Platform Manager 2 Bank	Platform Manager 2 Ball Location for JTAG
1	VCC_3V30	—	—
2	TDO	0	A3
3	TDI	0	B3
4	—	—	—
5	—	—	—
6	TMS	0	B4
7	GND	—	—
8	TCK	0	A4

4.2. Programming for Platform Manager 2

The Lattice Diamond Programmer can be used to program the **.jed** file in Platform Manager 2. The Lattice Diamond Programmer is integrated into the Lattice Diamond software and is also available as a stand-alone version.
To program Platform Manager 2's configuration flash memory:

1. Connect the Lattice programming cable fly wires to the Platform Manager 2 JTAG header (J39) as shown in Table 4.2.

Table 4.2. JTAG Connections

J39 Pin Number	JTAG Signal Name	Lattice Programming Cable	
		Cable Wire	Cable Wire Color
1	VCC_3V30	VCC	Red
2	TDO	TDO/SO	Brown
3	TDI	TDI/SI	Orange
4	—	–	–
5	—	–	–
6	TMS	TMS	Purple
7	GND	GND	Black
8	TCK	TCK	White

2. Connect the PC and the Lattice programming cable using the USB cable.
3. In the Lattice Diamond software, click **Tools>Programmer** or in Windows, go to **Start> Lattice Diamond 3.13>Diamond Programmer**.
4. The Lattice Diamond programmer interface opens as shown in Figure 4.1.

© 2023-2024 Lattice Semiconductor Corp. All Lattice trademarks, registered trademarks, patents, and disclaimers are as listed at www.latticesemi.com/legal.
All other brand or product names are trademarks or registered trademarks of their respective holders. The specifications and information herein are subject to change without notice.

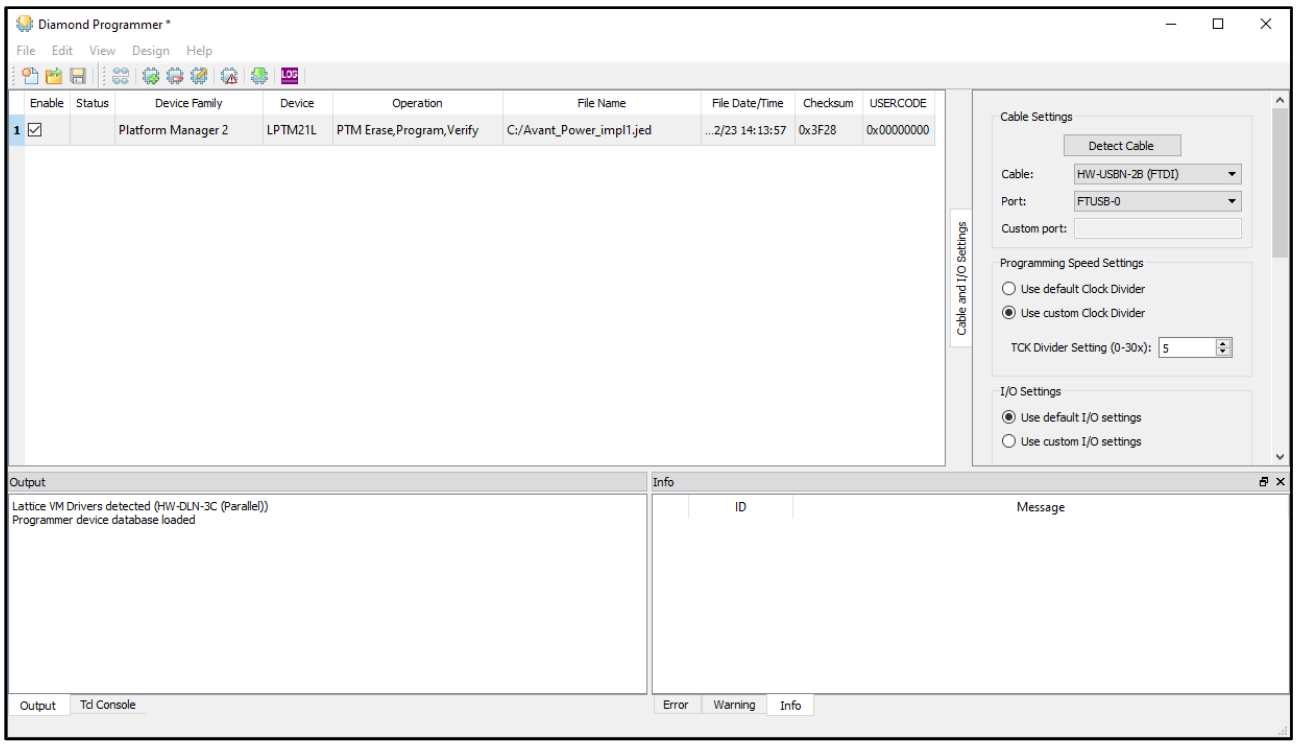

Figure 4.1. Lattice Radiant Programmer

5. Select the **.jed** file in the **File Name** column.

To program the **.jed** file, click the **Program** button in the Lattice Diamond Programmer or select **Run>Program Device**. If successful, the **Status** column shows **PASS**. The **Output** pane also shows **INFO–Operation: successful**.

© 2023-2024 Lattice Semiconductor Corp. All Lattice trademarks, registered trademarks, patents, and disclaimers are as listed at www.latticesemi.com/legal.
All other brand or product names are trademarks or registered trademarks of their respective holders. The specifications and information herein are subject to change without notice.

5. Programming Avant-E

The JTAG/SPI programming architecture of the Avant Evaluation Board is shown in Figure 5.1.

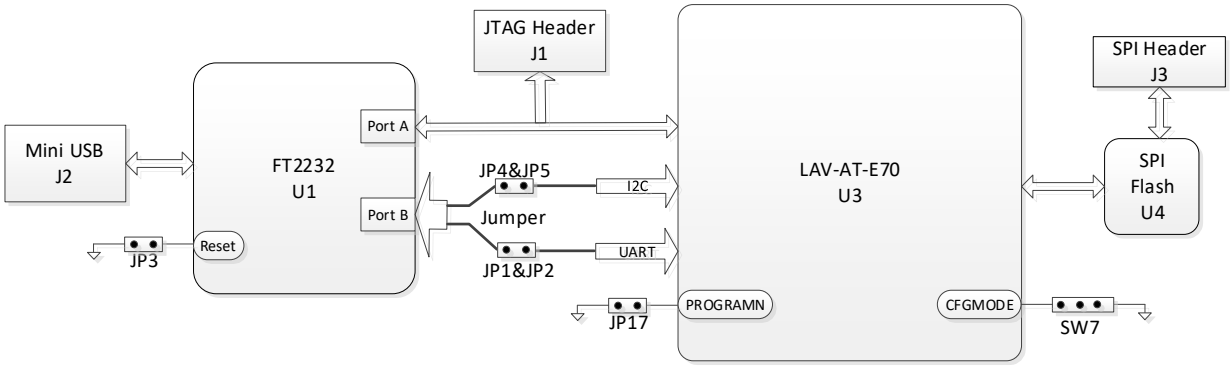

Figure 5.1. Configuration, UART and I²C Architecture

5.1. JTAG Download Interface

The Avant Evaluation Board has a built-in download controller for programming the Avant device. It uses the FT2232H part of Future Technology Devices International Ltd. (FTDI) to convert USB to JTAG. To use the built-in download cable, connect the USB cable from a PC with Radiant Programmer installed to the mini-USB connector (J2) on the board. A USB-A to USB-B (Mini) cable is included in the Avant Evaluation Board Kit. The USB hub on the PC detects the cable of the USB function on Port A, making the built-in cable available for use with the Radiant programming software.

5.2. Alternate JTAG Download Interface

J1 is a stand-alone, eight-pin JTAG header that can be used with an external Lattice Programming Cable that is available separately. When the FTDI part is disabled from the JTAG chain by installing the JP3 jumper, the USB Programming Cable can be connected to J1 to interface with the Avant device. For details on the connection between the USB Programming Cable and J1, refer to the Programming Cables User Guide (FPGA-UG-02042). J1 can also be used as a test point when the configuration from USB to JTAG is working. The JTAG connections are listed in Table 5.1.

Table 5.1. JTAG Connections

J1 Pin Number	JTAG Signal Name	Avant Bank	Avant Ball Location for JTAG
1	VCC_3V30	—	—
2	TDO	2	U2
3	TDI	2	U1
4	—	—	—
5	—	—	—
6	TMS	2	R1
7	GND	—	—
8	TCK	2	T1

© 2023-2024 Lattice Semiconductor Corp. All Lattice trademarks, registered trademarks, patents, and disclaimers are as listed at www.latticesemi.com/legal.
All other brand or product names are trademarks or registered trademarks of their respective holders. The specifications and information herein are subject to change without notice.

5.3. Global Setting in Lattice Radiant software

The Avant Evaluation Board has been downloaded with the LED blinking project beforehand. Some **Global** settings in the **Device Constraint Editor** are configured. These settings are shown in Figure 5.2, Figure 5.3, and Figure 5.4.

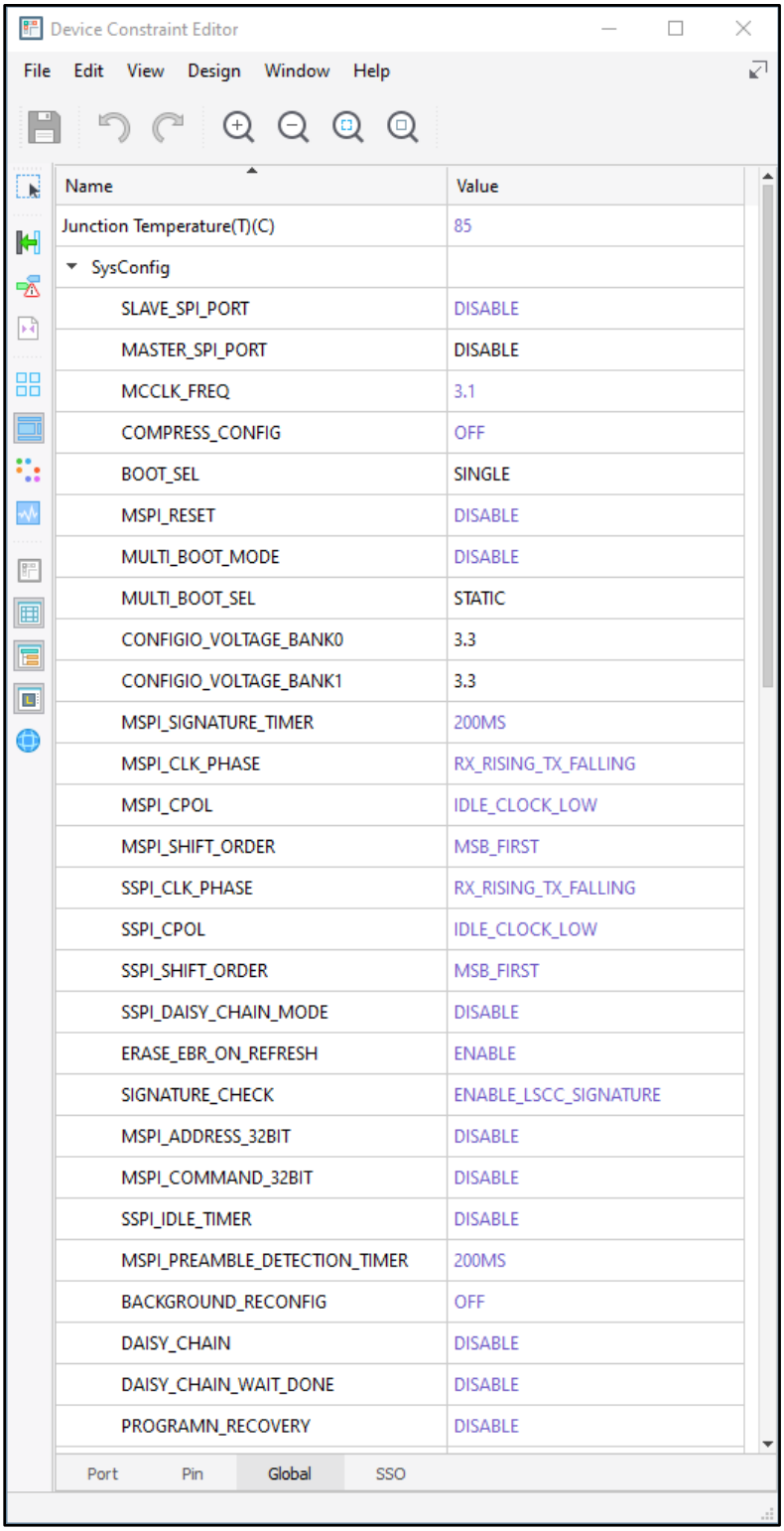

Figure 5.2. Global Settings (1)

© 2023-2024 Lattice Semiconductor Corp. All Lattice trademarks, registered trademarks, patents, and disclaimers are as listed at www.latticesemi.com/legal.
All other brand or product names are trademarks or registered trademarks of their respective holders. The specifications and information herein are subject to change without notice.

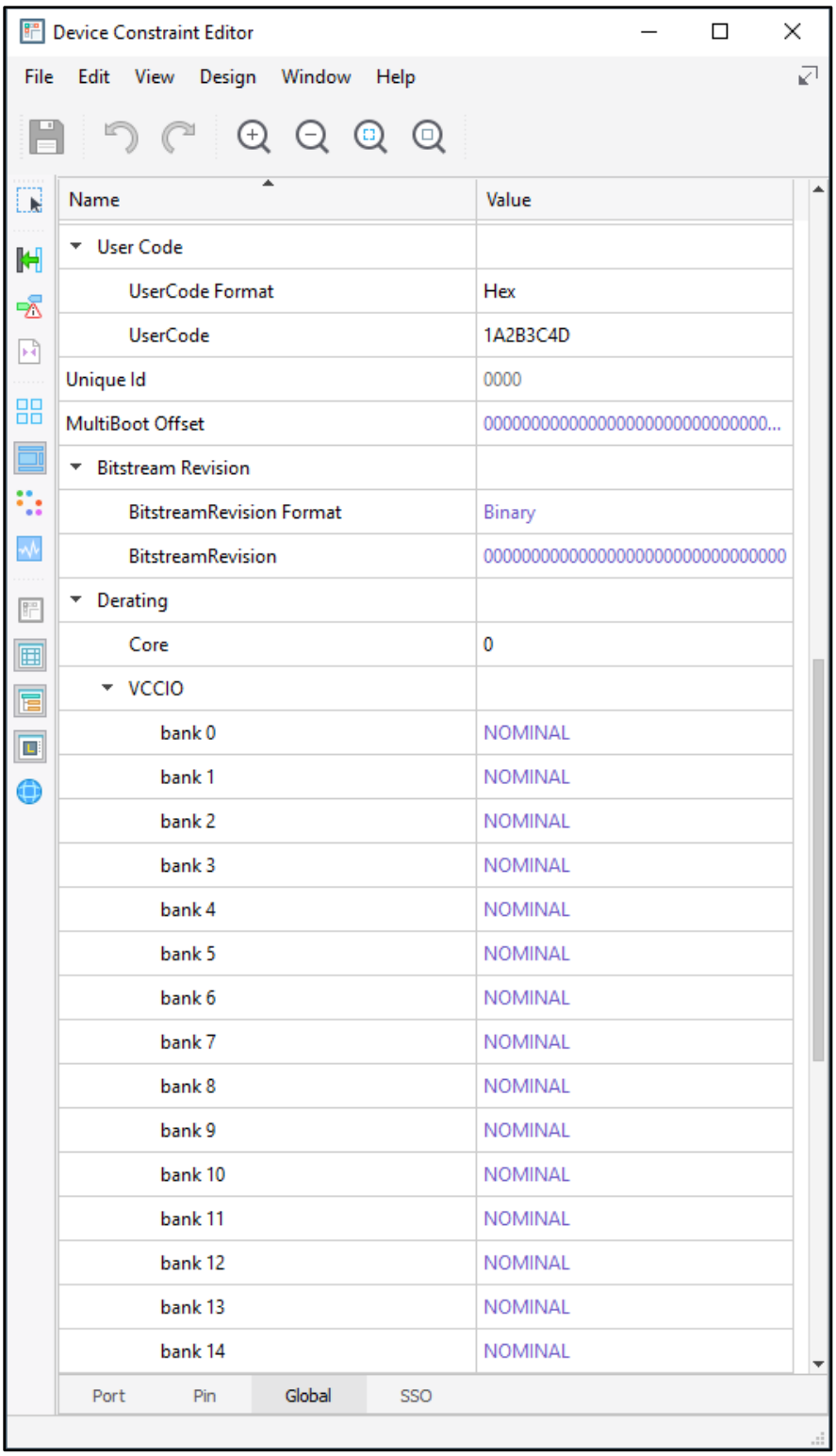

Figure 5.3. Global Settings (2)

© 2023-2024 Lattice Semiconductor Corp. All Lattice trademarks, registered trademarks, patents, and disclaimers are as listed at www.latticesemi.com/legal.
All other brand or product names are trademarks or registered trademarks of their respective holders. The specifications and information herein are subject to change without notice.

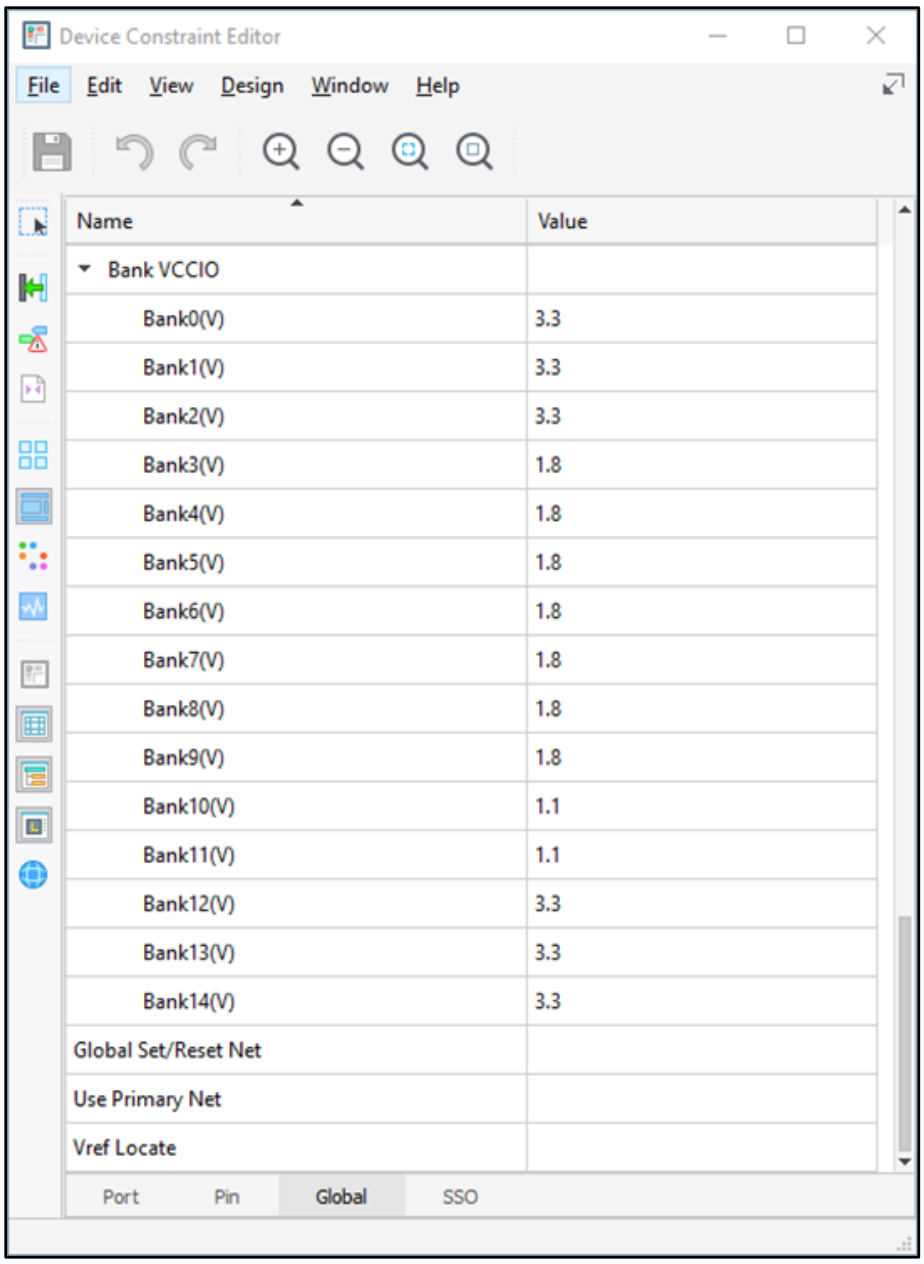

Figure 5.4. Global Settings (3)

© 2023-2024 Lattice Semiconductor Corp. All Lattice trademarks, registered trademarks, patents, and disclaimers are as listed at www.latticesemi.com/legal.
All other brand or product names are trademarks or registered trademarks of their respective holders. The specifications and information herein are subject to change without notice.

5.4. Other Configuration Pins

The Avant Evaluation Board provides test points for other configuration pins, as shown in Table 5.2.

Table 5.2. Other Configuration Signals

Signal Name	Avant Bank	Avant Ball Location	Test Point	Button/Jumper
PROGRAMN	2	P2	PROGRAMN	SW2/JP17
INITN	2	T5	INITN	—
DONE	2	U4	DONE	—
CFGMODE	2	P1	N/A	JP25

- **INITN**: Open drain pin. This signal is driven to LOW when the configuration sequence is started, indicating the device is in an initialization state. At this moment, the LED (D4) is lit with a red color. This signal is released after initialization is completed and the configuration download starts.
- **DONE**: Open drain pin. This signal is driven to LOW during configuration time. This signal releasing indicates the device has completed configuration. At this moment, the LED (D5) is lit with a green color.

For more information on Avant JTAG and SPI programming, refer to the Lattice Avant sysCONFIG User Guide (FPGA-TN-02299).

5.5. Programming of Avant SRAM

Radiant Programmer can be used to program the .bit file to the Avant SRAM. Radiant Programmer is integrated into the Radiant Software and is also available as a stand-alone version.

To program the Avant SRAM:

1. Connect the PC and Avant Evaluation Board (J2) using the USB cable.
2. Set SW7 to the JTAG position.
3. In the Lattice Radiant software, click **Tools>Programmer** or in Windows, go to **Start>Lattice Radiant Software 2022.1>Radiant Programmer**.
4. The Radiant Programmer interface opens as shown in Figure 5.5. Double-click the **Operation** field.

© 2023-2024 Lattice Semiconductor Corp. All Lattice trademarks, registered trademarks, patents, and disclaimers are as listed at www.latticesemi.com/legal.
All other brand or product names are trademarks or registered trademarks of their respective holders. The specifications and information herein are subject to change without notice.

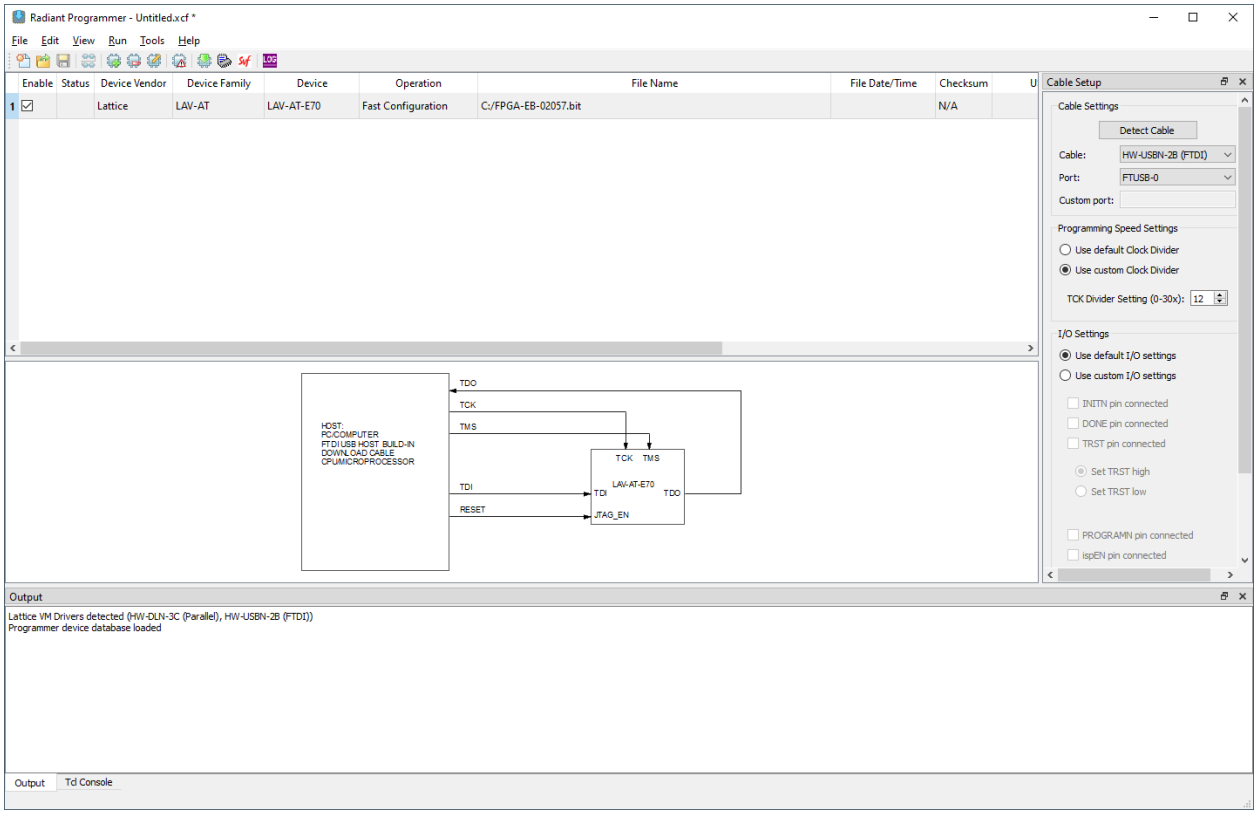

Figure 5.5. Radiant Programmer

5. The Device Properties dialog box opens as shown in Figure 5.6. Select the following options:
   - **Target Memory – Compressed Random Access Memory (CRAM)**
   - **Port Interface – JTAG**
   - **Access Mode – Direct Programming**
   - **Operation – Fast Configuration**
   - **Programming file** – Select the **.bit** file to be programmed.

© 2023-2024 Lattice Semiconductor Corp. All Lattice trademarks, registered trademarks, patents, and disclaimers are as listed at www.latticesemi.com/legal.
All other brand or product names are trademarks or registered trademarks of their respective holders. The specifications and information herein are subject to change without notice.

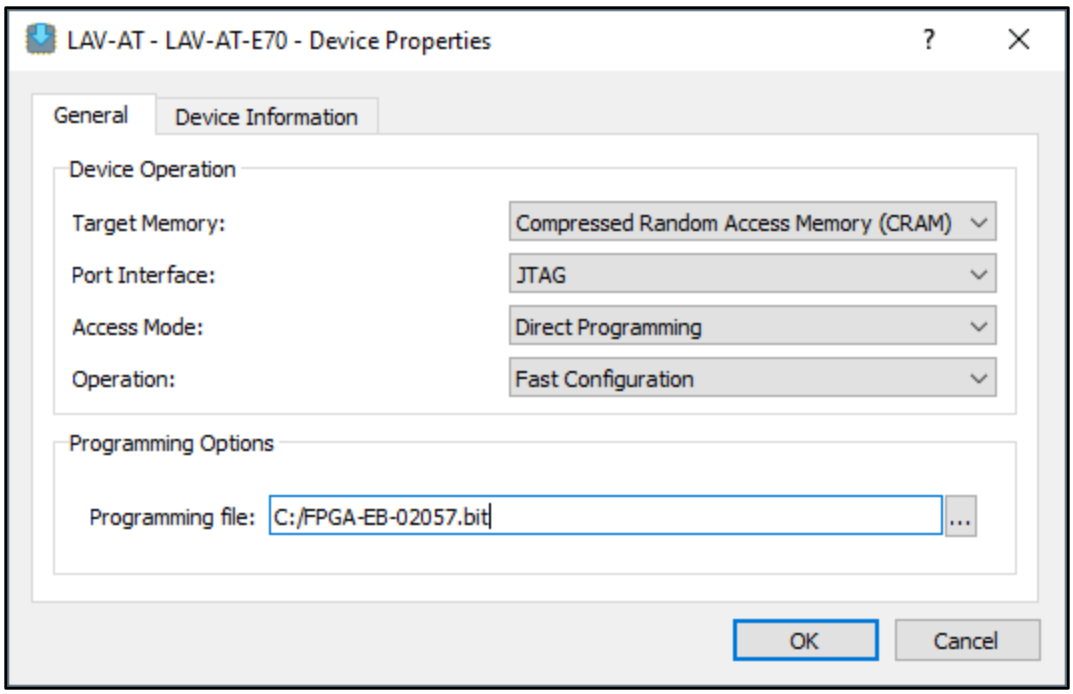

Figure 5.6. Radiant Programmer – Device Properties

6. Click **OK**.

To program the **.bit** file, click the **Program Device** button in the Lattice Radiant Programmer or select **Run**>**Program Device**. If successful, the **Status** column shows **PASS**. The **Output** pane also shows **INFO – Operation: successful**.

The design and bitstream loaded into the Avant Evaluation Board's flash (U4) can be found at the following link under **Design File**:

https://www.latticesemi.com/products/developmentboardsandkits/avant-e-evaluation-board

5.6. Programming of Flash

The on-board Flash (U4) device is a WinBond W25Q512JV that powers up through the 3.3 V supply. The Flash device can be programmed with Radiant Programmer through the J2 header. Radiant Programmer is integrated into the Lattice Radiant software and is also available as a stand-alone version.

To program the on-board flash:

1. Connect the PC and the Avant Evaluation board (J2) using the USB cable.
2. Insert the jumper to close JP51.
3. In the Lattice Radiant software, click **Tools>Programmer**, or in Windows, go to **Start>Lattice Radiant Software 2023.2>Radiant Programmer**.
4. The Lattice Radiant Programmer interface opens (Figure 5.7). Double-click the **Operation** field.

© 2023-2024 Lattice Semiconductor Corp. All Lattice trademarks, registered trademarks, patents, and disclaimers are as listed at www.latticesemi.com/legal.
All other brand or product names are trademarks or registered trademarks of their respective holders. The specifications and information herein are subject to change without notice.

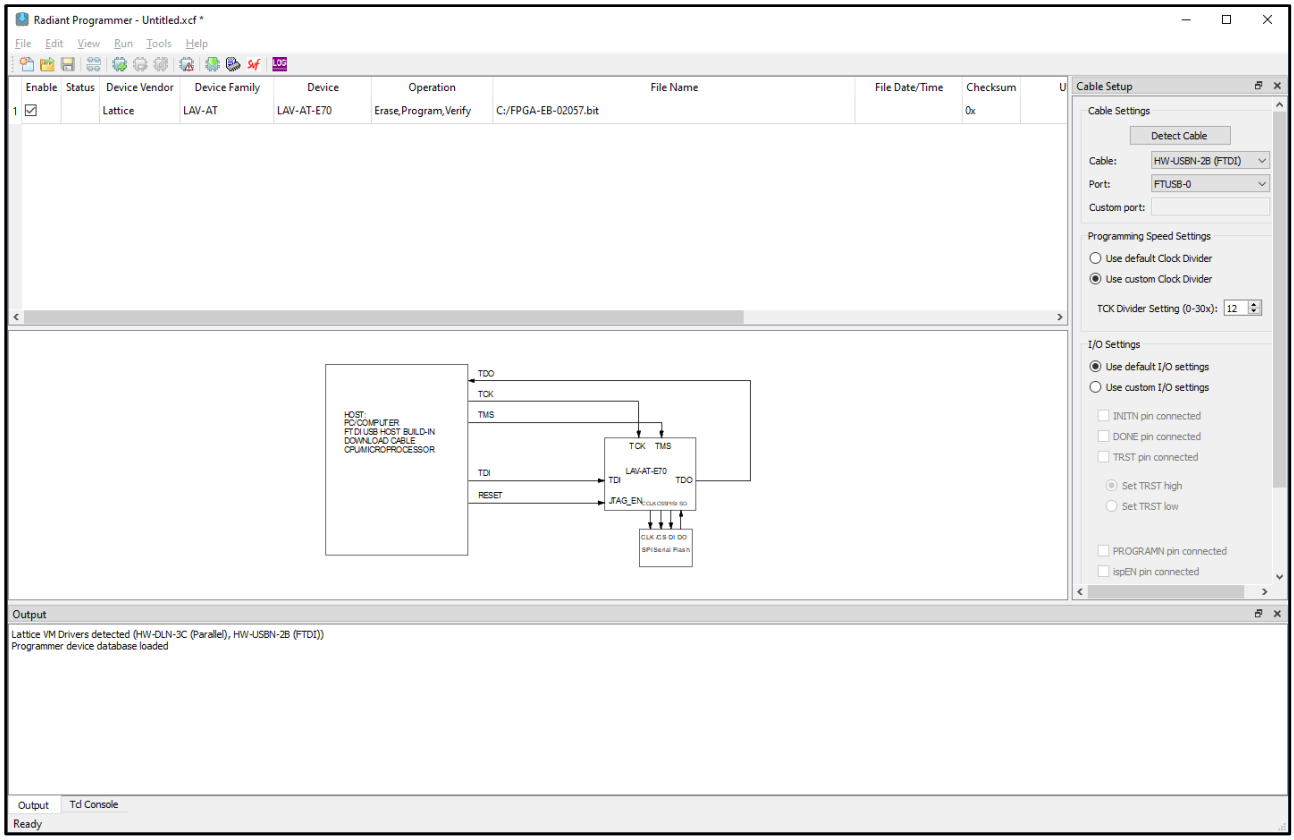

Figure 5.7. Radiant Programmer Interface

5. The Device Properties dialog box opens (Figure 5.8). Select the following options:
   - **Target Memory – External SPI Flash Memory (SPI Flash)**
   - **Port Interface – JTAG2SPI**
   - **Access Mode – Direct Programming**
   - **Operation – Erase, Program, Verify**
   - **Programming file** – Select the **.bit** file to be programmed.
   - **Family – SPI Serial Flash**
   - **Vendor – WinBond**
   - **Device – W25Q512JV**
   - **Package – 8-pad WSON**

© 2023-2024 Lattice Semiconductor Corp. All Lattice trademarks, registered trademarks, patents, and disclaimers are as listed at www.latticesemi.com/legal.
All other brand or product names are trademarks or registered trademarks of their respective holders. The specifications and information herein are subject to change without notice.

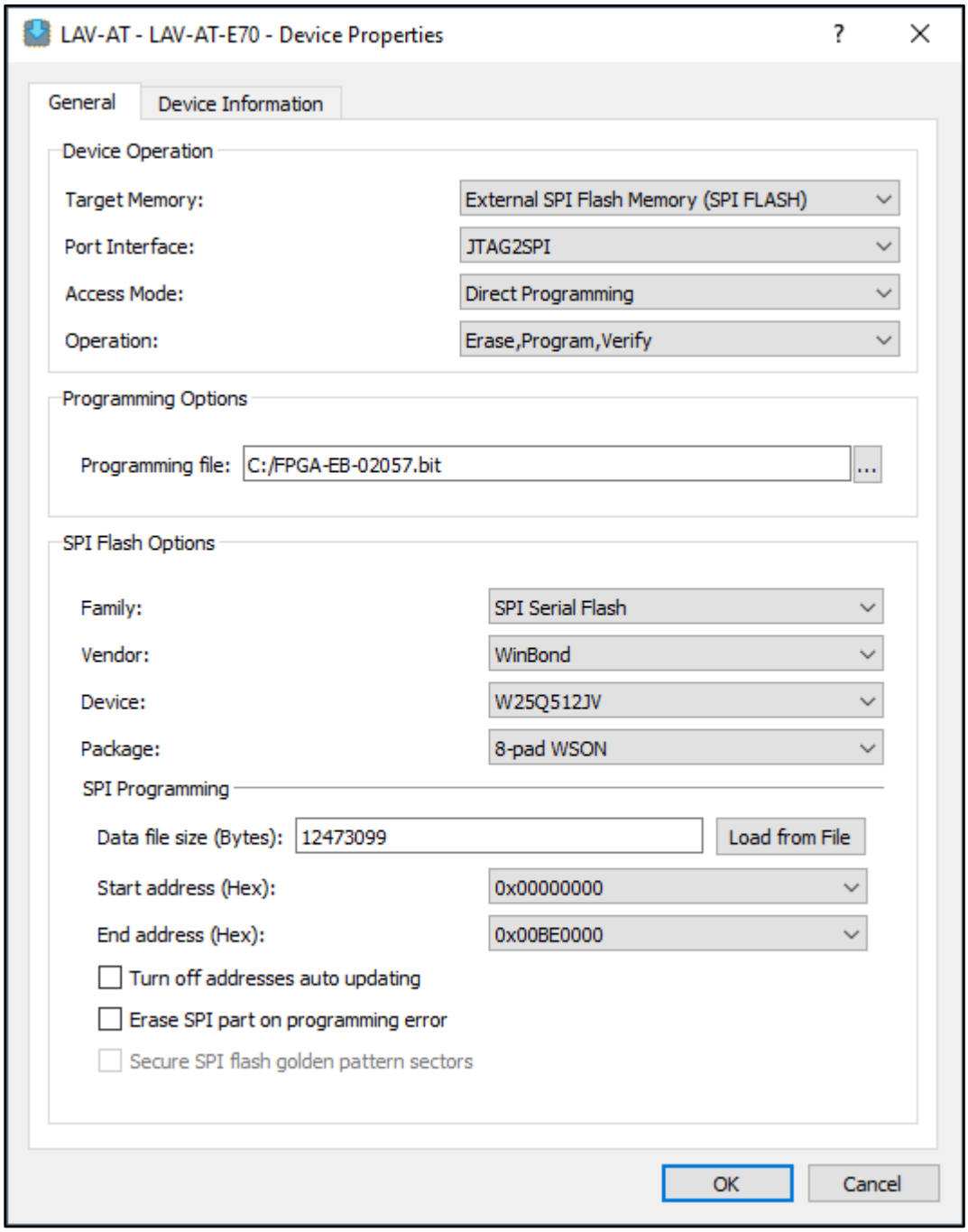

Figure 5.8. Radiant Programmer – Device Properties

6. Click **OK**.
7. Set **TCK Divider Setting (0–30x):** = 12.

To program the **.bit** file, click the **Program** button in the Lattice Radiant programmer or select **Run>Program Device**. If successful, the **Status** column shows **PASS**. The **Output** pane also shows **INFO – Operation: successful**.

© 2023-2024 Lattice Semiconductor Corp. All Lattice trademarks, registered trademarks, patents, and disclaimers are as listed at www.latticesemi.com/legal.
All other brand or product names are trademarks or registered trademarks of their respective holders. The specifications and information herein are subject to change without notice.

5.7. Boot of Flash

1. Power off the board through SW6.
2. Set SW7 to the MSPI position.
3. Insert jumper to close JP51.
4. Power on the board through SW6.
5. If successful, LED D6-D13, D22-D29 & D60 should blink.

© 2023-2024 Lattice Semiconductor Corp. All Lattice trademarks, registered trademarks, patents, and disclaimers are as listed at www.latticesemi.com/legal.
All other brand or product names are trademarks or registered trademarks of their respective holders. The specifications and information herein are subject to change without notice.

6. Avant Clock Sources

The Avant Evaluation Board has three options for the Avant clock sources, as shown in Table 6.1.

Table 6.1. Clock Sources

Clock Frequency (MHz)	Signal Name	Avant Bank	Avant Ball Location	Clock Source	Comments
12	12_MHz	2	U3	X1	JP6 is installed and JP65 set to 2-3.
100	F_DDR_100MHz_P/N	10	AA34/ AA33	Y1	HCSL differential output
125	125 MHz	6	AL10	X3	Requires VCCIO = 1.8 V

© 2023-2024 Lattice Semiconductor Corp. All Lattice trademarks, registered trademarks, patents, and disclaimers are as listed at www.latticesemi.com/legal.
All other brand or product names are trademarks or registered trademarks of their respective holders. The specifications and information herein are subject to change without notice.

7. Control Buses – I²C, UART, and SPI

This section describes the topology of the various configuration and communication buses.

7.1. I²C Topology

The Avant Evaluation Board has four sets of I²C buses. One I²C bus is through the output port B of the FTDI chip. The second I²C bus is out of Bank 6 at a header. There is an I²C bus for each of the FMC connectors. The I²C connections are summarized in Table 7.1.

Table 7.1. I²C Bus Connections

Signal Name	Avant Bank	Avant Ball Location	Other Connection	Comments
SCL	14	R12	U1.38	R103 and JP4 need to be inserted.
SDA	14	T11	U1.39 & U1.40	R104 and JP5 need to be inserted.
B6_SCL	6	AH16	JP64.3	Debug Header
B6_SDA	6	AG16	JP64.1	Debug Header
FMC1_SCL	0	T8	J48.C30 & J10.10	FMC Header and Debug Header
FMC1_SDA	0	U8	J48.C31 & J10.14	FMC Header and Debug Header
FMC2_SCL	13	R15	J54.C30 & J53.10	FMC Header and Debug Header
FMC2_SDA	13	R14	J54.C31 & J53.14	FMC Header and Debug Header

7.2. UART Topology

The board provides one UART communication interface by providing a flexible connection between the Avant device and the FTDI chip. Close the two jumpers, JP1 and JP2, to connect to two general-purpose I/Os in Bank 2, as shown in Table 7.2. This UART connection is shared with the I²C bus connection on the FTDI device.

Table 7.2. UART Bus Connections

Signal Name	Avant Bank	Avant Ball Location	FTDI Chip Ball Location	Jumper
TXD_UART	2	T3	38	JP1
RXD_UART	2	R3	39	JP2

7.3. SPI Topology

7.3.1. SPI Configuration

One of the major functions of SPI connections on the board is to support Avant configuration from the SPI Flash or the Parallel Configuration Header (J3), as shown in Table 7.3. The Avant Evaluation Board can support both Controller SPI (MSPI) and Target SPI (SSPI) modes for Avant configuration. Jumper JP51 selects chip select connection to flash (U4), either from Avant or Header J3.

Table 7.3. SPI Bus Connections

Signal Name	Avant Bank	Avant Ball	Parallel Configuration Header Pin
SPI_MCLK	1	P9	12
DQ0_MOSI	1	L12	5
DQ1_MISO	1	L11	7
CSSPIN	1	P7	8
DQ2	1	L10	11
DQ3	1	L9	9
FLASH_CS	N/A	N/A	2

© 2023-2024 Lattice Semiconductor Corp. All Lattice trademarks, registered trademarks, patents, and disclaimers are as listed at www.latticesemi.com/legal.
All other brand or product names are trademarks or registered trademarks of their respective holders. The specifications and information herein are subject to change without notice.

8. LEDs, Switches and Segment Displays

This section describes the Avant Evaluation Board LEDs, switches, and segment displays that can be used in demo and customer designs.

8.1. DIP Switch

Eight Avant pins are connected to the DIP switch (SW3) to allow manual actuating input to the FPGA. One side of each switch is connected to GPIOs within Bank 6 and is pulled up through 4.7 kΩ resistors. The other side is grounded. The designated pins are connected as shown in Table 8.1.

Table 8.1. DIP Switch Signals

Signal Name	Avant Ball Location	Avant Bank
DIP_SW1	AA16	6
DIP_SW2	AA17	6
DIP_SW3	AL16	6
DIP_SW4	AM16	6
DIP_SW5	AB16	6
DIP_SW6	AB17	6
DIP_SW7	AP16	6
DIP_SW8	AN16	6

8.2. General Purpose Push Buttons

The Avant Evaluation Board provides four push-button switches, SW1, SW2, SW4, and SW5, for demo and user applications. One of the buttons is a pre-defined functional pin, and the other three are generic pins. Pressing these buttons drives a logic level “0” to the corresponding I/O pins. The designated pins are connected, as shown in Table 8.2.

Table 8.2. Push Button Switch Signals

Signal Name	Avant Bank	Avant Ball Location	Push Button Reference	Logic Level at Button Pressed
PROGRAMN	1	P2	SW2	0
PUSHBUTTON1	6	AC17	SW1	0
PUSHBUTTON2	6	AC16	SW4	0
PUSHBUTTON3	6	AP15	SW5	0

For more information on PROGRAMN, refer to the Lattice Avant sysCONFIG User Guide (FPGA-TN-02299). SW2, SW4, and SW5 can be used as generic input.

© 2023-2024 Lattice Semiconductor Corp. All Lattice trademarks, registered trademarks, patents, and disclaimers are as listed at www.latticesemi.com/legal.
All other brand or product names are trademarks or registered trademarks of their respective holders. The specifications and information herein are subject to change without notice.

8.3. General Purpose LEDs

The Avant Evaluation Board provides 16 LEDs that are connected to I/O within Banks 1 and 6. The LEDs are either green or red, as shown in Table 8.3.

Table 8.3. General Purpose LED Signals

Signal Name	Avant Ball Location	Avant Bank	LED	Avant Color
LED_0	N7	1	D6	Green
LED_1	L7	1	D7	Green
LED_2	L8	1	D8	Green
LED_3	P8	1	D9	Green
LED_4	M8	1	D10	Green
LED_5	M9	1	D11	Green
LED_6	P10	1	D12	Green
LED_7	N10	1	D13	Green
LED_8	AN15	6	D22	Red
LED_9	AH17	6	D23	Red
LED_10	AG17	6	D24	Red
LED_11	AM14	6	D25	Red
LED_12	AL14	6	D26	Red
LED_13	AK17	6	D27	Red
LED_14	AJ17	6	D28	Red
LED_15	AN14	6	D29	Red

8.4. Segment Displays

The Avant Evaluation Board provides a 3-Character, 7-Segment LED display (D60) that is connected to I/O within Bank 14. The designated pins are connected, as shown in Table 8.4.

Table 8.4. Segment Display

Signal Name	Avant Ball Location	Avant Bank	Segment Display
SEG_A	V10	14	A
SEG_B	T10	14	B
SEG_C	V12	14	C
SEG_D	V13	14	D
SEG_E	W10	14	E
SEG_F	V11	14	F
SEG_G	W12	14	G
SEG_DP	W11	14	DP
K_DIG1	W9	14	K_DIG1
K_DIG2	V9	14	K_DIG2
K_DIG3	R10	14	K_DIG3

© 2023-2024 Lattice Semiconductor Corp. All Lattice trademarks, registered trademarks, patents, and disclaimers are as listed at www.latticesemi.com/legal.
All other brand or product names are trademarks or registered trademarks of their respective holders. The specifications and information herein are subject to change without notice.

9. Headers/Connectors and Avant Device Ball Mapping

This section describes the Avant Evaluation Board headers, connectors, and ball mapping. Bank 5 shares signals between FMC1 and FMC2. If both FMC connectors are used, ensure the signals on Bank 5 are at the same voltage level.

9.1. FMC1 Connector

Table 9.1. FMC1 Pin Connections

J48 Pin Name	Signal Name	Avant Bank	Avant Ball Location
B1	FMC1_RES1	0	V5
B40	FMC1_RES0	0	W5
C10	FMC1_LA06_P	3	Y8
C11	FMC1_LA06_N	3	Y9
C14	FMC1_LA10_P	3	AC13
C15	FMC1_LA10_N	3	AC12
C18	FMC1_LA14_P	3	AC4
C19	FMC1_LA14_N	3	AC5
C22	FMC1_LA18_CLK_P	5	AN7
C23	FMC1_LA18_CLK_N	5	AP7
C26	FMC1_LA27_P	3	AB10
C27	FMC1_LA27_N	3	AC10
C30	FMC1_SCL	0	T8
C31	FMC1_SDA	0	U8
C34	FMC1_GA0	—	—
D1	FMC1_PG_C2M	0	V4
D8	FMC1_LA01_CLK_P	3	AB1
D9	FMC1_LA01_CLK_N	3	AC1
D11	FMC1_LA05_P	3	AA8
D12	FMC1_LA05_N	3	AA9
D14	FMC1_LA09_P	3	AD12
D15	FMC1_LA09_N	3	AD11
D17	FMC1_LA13_P	3	AA3
D18	FMC1_LA13_N	3	Y3
D20	FMC1_LA17_CLK_P	3	AC8
D21	FMC1_LA17_CLK_N	3	AC9
D23	FMC1_LA23_P	3	AD9
D24	FMC1_LA23_N	3	AD10
D26	FMC1_LA26_P	5	AG12
D27	FMC1_LA26_N	5	AG13
D29	FMC1_TCK	0	T7
D30	FMC1_TDI	0	W1
D31	FMC1_TDO	0	V1
D33	FMC1_TMS	0	W7
D34	FMC1_TRST_L	—	—
D35	FMC1_GA1	—	—
E2	FMC1_HA01_CLK_P	4	AH1
E3	FMC1_HA01_CLK_N	4	AJ1
E6	FMC1_HA05_P	4	AE5
E7	FMC1_HA05_N	4	AF5

© 2023-2024 Lattice Semiconductor Corp. All Lattice trademarks, registered trademarks, patents, and disclaimers are as listed at www.latticesemi.com/legal.
All other brand or product names are trademarks or registered trademarks of their respective holders. The specifications and information herein are subject to change without notice.

J48 Pin Name	Signal Name	Avant Bank	Avant Ball Location
E9	FMC1_HA09_P	4	AE2
E10	FMC1_HA09_N	4	AF2
E12	FMC1_HA13_P	4	AJ4
E13	FMC1_HA13_N	4	AK4
E15	FMC1_HA16_P	4	AM4
E16	FMC1_HA16_N	4	AL4
E18	FMC1_HA20_P	4	AF9
E19	FMC1_HA20_N	4	AE9
F1	FMC1_PG_M2C	0	W4
F4	FMC1_HA00_CLK_P	4	AF6
F5	FMC1_HA00_CLK_N	4	AE6
F7	FMC1_HA04_P	4	AE4
F8	FMC1_HA04_N	4	AF4
F10	FMC1_HA08_N	4	AG1
F11	FMC1_HA08_P	4	AG2
F13	FMC1_HA12_P	4	AJ2
F14	FMC1_HA12_N	4	AK2
F16	FMC1_HA15_P	4	AE11
F17	FMC1_HA15_N	4	AF11
F19	FMC1_HA19_P	4	AF10
F20	FMC1_HA19_N	4	AE10
G2	FMC1_CLK1_M2C_P	4	AP2
G3	FMC1_CLK1_M2C_N	4	AP3
G6	FMC1_LA00_CLK_P	3	Y7
G7	FMC1_LA00_CLK_N	3	Y6
G9	FMC1_LA03_P	3	AD6
G10	FMC1_LA03_N	3	AD5
G12	FMC1_LA08_P	3	AA2
G13	FMC1_LA08_N	3	Y2
G15	FMC1_LA12_P	3	AB4
G16	FMC1_LA12_N	3	AB5
G18	FMC1_LA16_P	3	AC3
G19	FMC1_LA16_N	3	AC2
G21	FMC1_LA20_P	3	AD3
G22	FMC1_LA20_N	3	AD4
G24	FMC1_LA22_P	5	AC15
G25	FMC1_LA22_N	5	AC14
G27	FMC1_LA25_P	5	AH10
G28	FMC1_LA25_N	5	AJ10
G30	FMC1_LA29_P	5	AK9
G31	FMC1_LA29_N	5	AK8
G33	FMC1_LA31_P	5	AM8
G34	FMC1_LA31_N	5	AM9
G36	FMC1_LA33_P	5	AN9
G37	FMC1_LA33_N	5	AN8
H1	FMC1_VREFA	3/4/5	AA11/AG6/AF13
H2	FMC1_PRSNT_M2C_L	0	U7
H4	FMC1_CLK0_M2C_P	4	AF1

© 2023-2024 Lattice Semiconductor Corp. All Lattice trademarks, registered trademarks, patents, and disclaimers are as listed at www.latticesemi.com/legal.
All other brand or product names are trademarks or registered trademarks of their respective holders. The specifications and information herein are subject to change without notice.

J48 Pin Name	Signal Name	Avant Bank	Avant Ball Location
H5	FMC1_CLK0_M2C_N	4	AE1
H7	FMC1_LA02_P	3	AC7
H8	FMC1_LA02_N	3	AC6
H10	FMC1_LA04_P	3	Y11
H11	FMC1_LA04_N	3	Y10
H13	FMC1_LA07_P	3	AB13
H14	FMC1_LA07_N	3	AB12
H16	FMC1_LA11_P	3	AA4
H17	FMC1_LA11_N	3	Y4
H19	FMC1_LA15_P	3	AD2
H20	FMC1_LA15_N	3	AD1
H22	FMC1_LA19_P	3	AD7
H23	FMC1_LA19_N	3	AD8
H25	FMC1_LA21_P	5	AE14
H26	FMC1_LA21_N	5	AF14
H28	FMC1_LA24_P	5	AK10
H29	FMC1_LA24_N	5	AK11
H31	FMC1_LA28_P	5	AL8
H32	FMC1_LA28_N	5	AL9
H34	FMC1_LA30_P	5	AN6
H35	FMC1_LA30_N	5	AN5
H37	FMC1_LA32_P	5	AP9
H38	FMC1_LA32_N	5	AP8
J2	FMC1_CLK3_M2C_P	5	AJ12
J3	FMC1_CLK3_M2C_N	5	AJ11
J6	FMC1_HA03_P	4	AE7
J7	FMC1_HA03_N	4	AF7
J9	FMC1_HA07_P	4	AH4
J10	FMC1_HA07_N	4	AH3
J12	FMC1_HA11_P	4	AN1
J13	FMC1_HA11_N	4	AM1
J15	FMC1_HA14_P	4	AM3
J16	FMC1_HA14_N	4	AN3
J18	FMC1_HA18_P	4	AG7
J19	FMC1_HA18_N	4	AG8
J21	FMC1_HA22_P	5	AA15
J22	FMC1_HA22_N	5	AA14
K4	FMC1_CLK2_M2C_P	3	AB7
K5	FMC1_CLK2_M2C_N	3	AA7
K7	FMC1_HA02_P	4	AF3
K8	FMC1_HA02_N	4	AE3
K10	FMC1_HA06_P	4	AL1
K11	FMC1_HA06_N	4	AK1
K13	FMC1_HA10_P	4	AN4
K14	FMC1_HA10_N	4	AP4
K16	FMC1_HA17_CLK_P	5	AF12
K17	FMC1_HA17_CLK_N	5	AE12
K19	FMC1_HA21_P	4	AH6

© 2023-2024 Lattice Semiconductor Corp. All Lattice trademarks, registered trademarks, patents, and disclaimers are as listed at www.latticesemi.com/legal.
All other brand or product names are trademarks or registered trademarks of their respective holders. The specifications and information herein are subject to change without notice.

J48 Pin Name	Signal Name	Avant Bank	Avant Ball Location
K20	FMC1_HA21_N	4	AH5
K22	FMC1_HA23_P	5	AB14
K23	FMC1_HA23_N	5	AB15

9.2. FMC2 Connector

Table 9.2. FMC2 Pin Connections

J54 Pin Name	Signal Name	Avant Bank	Avant Ball Location
B1	FMC2_RES1	13	R18
B40	FMC2_RES0	13	R19
C10	FMC2_LA06_P	7	AL20
C11	FMC2_LA06_N	7	AM20
C14	FMC2_LA10_P	7	Y17
C15	FMC2_LA10_N	7	Y18
C18	FMC2_LA14_P	7	AF19
C19	FMC2_LA14_N	7	AF20
C22	FMC2_LA18_CLK_P	8	AN28
C23	FMC2_LA18_CLK_N	8	AM28
C26	FMC2_LA27_P	7	AM23
C27	FMC2_LA27_N	7	AL23
C30	FMC2_SCL	13	R15
C31	FMC2_SDA	13	R14
C34	FMC2_GA0	—	—
D1	FMC2_PG_C2M	13	T18
D8	FMC2_LA01_CLK_P	7	AG20
D9	FMC2_LA01_CLK_N	7	AH20
D11	FMC2_LA05_P	7	AN18
D12	FMC2_LA05_N	7	AP18
D14	FMC2_LA09_P	7	AD17
D15	FMC2_LA09_N	7	AE17
D17	FMC2_LA13_P	7	AE18
D18	FMC2_LA13_N	7	AE19
D20	FMC2_LA17_CLK_P	7	AP22
D21	FMC2_LA17_CLK_N	7	AN22
D23	FMC2_LA23_P	7	AK21
D24	FMC2_LA23_N	7	AK22
D26	FMC2_LA26_P	8	AK28
D27	FMC2_LA26_N	8	AK27
D29	FMC2_TCK	13	U15
D30	FMC2_TDI	13	U16
D31	FMC2_TDO	13	U17
D33	FMC2_TMS	13	W14
D34	FMC2_TRST_L	—	—
D35	FMC2_GA1	—	—
E2	FMC2_HA01_CLK_P	9	AG33
E3	FMC2_HA01_CLK_N	9	AH33
E6	FMC2_HA05_P	9	AH30

© 2023-2024 Lattice Semiconductor Corp. All Lattice trademarks, registered trademarks, patents, and disclaimers are as listed at www.latticesemi.com/legal.
All other brand or product names are trademarks or registered trademarks of their respective holders. The specifications and information herein are subject to change without notice.

J54 Pin Name	Signal Name	Avant Bank	Avant Ball Location
E7	FMC2_HA05_N	9	AJ30
E9	FMC2_HA09_P	9	AK31
E10	FMC2_HA09_N	9	AK32
E12	FMC2_HA13_P	9	AN32
E13	FMC2_HA13_N	9	AP32
E15	FMC2_HA16_P	9	AL33
E16	FMC2_HA16_N	9	AL34
E18	FMC2_HA20_P	9	AJ31
E19	FMC2_HA20_N	9	AJ32
E21	FMC2_HB03_P	8	AD19
E22	FMC2_HB03_N	8	AD20
E24	FMC2_HB05_P	8	AG21
E25	FMC2_HB05_N	8	AF21
E27	FMC2_HB09_P	8	AG23
E28	FMC2_HB09_N	8	AG24
E30	FMC2_HB13_P	8	AN24
E31	FMC2_HB13_N	8	AP24
E33	FMC2_HB19_P	8	AM26
E34	FMC2_HB19_N	8	AM25
E36	FMC2_HB21_P	8	AL26
E37	FMC2_HB21_N	8	AK26
F1	FMC2_PG_M2C	13	T19
F4	FMC2_HA00_CLK_P	9	AM30
F5	FMC2_HA00_CLK_N	9	AL30
F7	FMC2_HA04_P	9	AH26
F8	FMC2_HA04_N	9	AG26
F10	FMC2_HA08_P	9	AP31
F11	FMC2_HA08_N	9	AN31
F13	FMC2_HA12_P	9	AN34
F14	FMC2_HA12_N	9	AN33
F16	FMC2_HA15_P	9	AK33
F17	FMC2_HA15_N	9	AK34
F19	FMC2_HA19_P	9	AH34
F20	FMC2_HA19_N	9	AG34
F22	FMC2_HB02_P	8	AJ23
F23	FMC2_HB02_N	8	AH23
F25	FMC2_HB04_P	8	AG25
F26	FMC2_HB04_N	8	AF25
F28	FMC2_HB08_P	8	AL29
F29	FMC2_HB08_N	8	AM29
F31	FMC2_HB12_P	8	AN25
F32	FMC2_HB12_N	8	AP25
F34	FMC2_HB16_P	8	AP26
F35	FMC2_HB16_N	8	AN26
F37	FMC2_HB20_P	8	AP29
F38	FMC2_HB20_N	8	AN29
G2	FMC2_CLK1_M2C_P	9	AP30
G3	FMC2_CLK1_M2C_N	9	AN30

© 2023-2024 Lattice Semiconductor Corp. All Lattice trademarks, registered trademarks, patents, and disclaimers are as listed at www.latticesemi.com/legal.
All other brand or product names are trademarks or registered trademarks of their respective holders. The specifications and information herein are subject to change without notice.

J54 Pin Name	Signal Name	Avant Bank	Avant Ball Location
G6	FMC2_LA00_CLK_P	7	AJ18
G7	FMC2_LA00_CLK_N	7	AK18
G9	FMC2_LA03_P	7	AM18
G10	FMC2_LA03_N	7	AL18
G12	FMC2_LA08_P	7	AN20
G13	FMC2_LA08_N	7	AP20
G15	FMC2_LA12_P	7	AB18
G16	FMC2_LA12_N	7	AA18
G18	FMC2_LA16_P	7	AL17
G19	FMC2_LA16_N	7	AM17
G21	FMC2_LA20_P	7	AH21
G22	FMC2_LA20_N	7	AH22
G24	FMC2_LA22_P	8	AH24
G25	FMC2_LA22_N	8	AH25
G27	FMC2_LA25_P	7	AP21
G28	FMC2_LA25_N	7	AN21
G30	FMC2_LA29_P	8	AC20
G31	FMC2_LA29_N	8	AB20
G33	FMC2_LA31_P	8	AB19
G34	FMC2_LA31_N	8	AA19
G36	FMC2_LA33_P	8	AP28
G37	FMC2_LA33_N	8	AP27
H1	FMC2_VREFA	7/8/9	AF18/AF24/AF27
H2	FMC2_PRSNT_M2C_L	13	T15
H4	FMC2_CLK0_M2C_P	9	AJ27
H5	FMC2_CLK0_M2C_N	9	AJ26
H7	FMC2_LA02_P	7	AK20
H8	FMC2_LA02_N	7	AJ20
H10	FMC2_LA04_P	7	AN19
H11	FMC2_LA04_N	7	AP19
H13	FMC2_LA07_P	7	AM21
H14	FMC2_LA07_N	7	AL21
H16	FMC2_LA11_P	7	AJ22
H17	FMC2_LA11_N	7	AJ21
H19	FMC2_LA15_P	7	AH18
H20	FMC2_LA15_N	7	AG18
H22	FMC2_LA19_P	7	AK19
H23	FMC2_LA19_N	7	AJ19
H25	FMC2_LA21_P	9	AF30
H26	FMC2_LA21_N	9	AG30
H28	FMC2_LA24_P	7	AN23
H29	FMC2_LA24_N	7	AP23
H31	FMC2_LA28_P	9	AH29
H32	FMC2_LA28_N	9	AG29
H34	FMC2_LA30_P	8	Y20
H35	FMC2_LA30_N	8	AA20
H37	FMC2_LA32_P	8	AL27
H38	FMC2_LA32_N	8	AL28

© 2023-2024 Lattice Semiconductor Corp. All Lattice trademarks, registered trademarks, patents, and disclaimers are as listed at www.latticesemi.com/legal.
All other brand or product names are trademarks or registered trademarks of their respective holders. The specifications and information herein are subject to change without notice.

J54 Pin Name	Signal Name	Avant Bank	Avant Ball Location
J2	FMC2_CLK3_M2C_P	8	AE22
J3	FMC2_CLK3_M2C_N	8	AE23
J6	FMC2_HA03_P	9	AG27
J7	FMC2_HA03_N	9	AG28
J9	FMC2_HA07_P	9	AJ28
J10	FMC2_HA07_N	9	AJ29
J12	FMC2_HA11_P	9	AM32
J13	FMC2_HA11_N	9	AM31
J15	FMC2_HA14_P	9	AJ34
J16	FMC2_HA14_N	9	AJ33
J18	FMC2_HA18_P	9	AG32
J19	FMC2_HA18_N	9	AF32
J21	FMC2_HA22_P	8	AM24
J22	FMC2_HA22_N	8	AL24
J24	FMC2_HB01_P	5	AG10
J25	FMC2_HB01_N	5	AG11
J27	FMC2_HB07_P	5	AH9
J28	FMC2_HB07_N	5	AG9
J30	FMC2_HB11_P	5	AK7
J31	FMC2_HB11_N	5	AJ7
J33	FMC2_HB15_P	5	AP5
J34	FMC2_HB15_N	5	AP6
J36	FMC2_HB18_P	5	AL5
J37	FMC2_HB18_N	5	AL6
K1	FMC2_VREFB	5/8	AE13/AF23
K4	FMC2_CLK2_M2C_P	7	AP17
K5	FMC2_CLK2_M2C_N	7	AN17
K7	FMC2_HA02_P	9	AF28
K8	FMC2_HA02_N	9	AF29
K10	FMC2_HA06_P	9	AK29
K11	FMC2_HA06_N	9	AK30
K13	FMC2_HA10_P	9	AM33
K14	FMC2_HA10_N	9	AM34
K16	FMC2_HA17_CLK_P	8	AK24
K17	FMC2_HA17_CLK_N	8	AK23
K19	FMC2_HA21_P	9	AF31
K20	FMC2_HA21_N	9	AG31
K22	FMC2_HA23_P	8	AK25
K23	FMC2_HA23_N	8	AL25
K25	FMC2_HB00_P_CC	8	AE20
K26	FMC2_HB00_N_CC	8	AE21
K28	FMC2_HB06_P_CC	5	AH7
K29	FMC2_HB06_N_CC	5	AH8
K31	FMC2_HB10_P	5	AJ5
K32	FMC2_HB10_N	5	AJ6
K34	FMC2_HB14_P	5	AM6
K35	FMC2_HB14_N	5	AM5

© 2023-2024 Lattice Semiconductor Corp. All Lattice trademarks, registered trademarks, patents, and disclaimers are as listed at www.latticesemi.com/legal.
All other brand or product names are trademarks or registered trademarks of their respective holders. The specifications and information herein are subject to change without notice.

J54 Pin Name	Signal Name	Avant Bank	Avant Ball Location
K37	FMC2_HB17_P_CC	5	AK5
K38	FMC2_HB17_N_CC	5	AK6

9.3. Parallel FMC1 Configuration Header

Table 9.3. Parallel FMC1 Configuration Header Pin Connections

J10 Pin Name	Signal Name	Avant Bank	Avant Ball Location
1	VCC_3V30	—	—
2	VCC_3V30	—	—
3	FMC1_TCK	0	T7
4	FMC1_PG_C2M	0	V4
5	FMC1_PG_M2C	0	W4
6	FMC1_TRST_L	—	—
7	FMC1_TDI	0	W1
8	FMC1_PRSNT_M2C_L	0	U7
9	FMC1_TDO	0	V1
10	FMC1_SCL	0	T8
11	GND	—	—
12	GND	—	—
13	FMC1_TMS	0	W7
14	FMC1_SDA	0	U8

9.4. Parallel FMC2 Configuration Header

Table 9.4. Parallel FMC2 Configuration Header Pin Connections

J53 Pin Name	Signal Name	Avant Bank	Avant Ball Location
1	VCC_3V30	—	—
2	VCC_3V30	—	—
3	FMC2_TCK	13	U15
4	FMC2_PG_C2M	13	T18
5	FMC2_PG_M2C	13	T19
6	FMC2_TRST_L	—	—
7	FMC2_TDI	13	U16
8	FMC2_PRSNT_M2C_L	13	T15
9	FMC2_TDO	13	U17
10	FMC2_SCL	13	R15
11	GND	—	—
12	GND	—	—
13	FMC2_TMS	13	W14
14	FMC2_SDA	13	R14

© 2023-2024 Lattice Semiconductor Corp. All Lattice trademarks, registered trademarks, patents, and disclaimers are as listed at www.latticesemi.com/legal.
All other brand or product names are trademarks or registered trademarks of their respective holders. The specifications and information herein are subject to change without notice.

9.5. Raspberry PI Board GPIO Header

The Avant Evaluation Board provides a 40-pin receptacle that is compatible with the GPIO header of Raspberry Pi 2/3 serial models or can be used for general-purpose I/O.

Table 9.5. Raspberry PI header Pin Connections

JP26 Pin Name	Signal Name	Avant Bank	Avant Ball Location
1	VCC_3V30[1]	—	—
2	VCC_5V00[1]	—	—
3	RASP_IO02	13	V15
4	VCC_5V00[1]	—	—
5	RASP_IO03	13	T13
6	GND	—	—
7	RASP_IO04[2]	2	U3
8	RASP_IO14	13	V14
9	GND	—	—
10	RASP_IO15	13	R13
11	RASP_IO17	13	V16
12	RASP_IO18	14	T12
13	RASP_IO27	2	P3
14	GND	—	—
15	RASP_IO22	0	W6
16	RASP_IO23	2	P4
17	VCC_3V30[1]	—	—
18	RASP_IO24	2	N5
19	RASP_IO10	2	R6
20	GND	—	—
21	RASP_IO09	2	R5
22	RASP_IO25	0	V2
23	RASP_IO11	14	U12
24	RASP_IO08	2	P5
25	GND	—	—
26	RASP_IO07	2	P6
27	RASP_ID_SD	14	T11
28	RASP_ID_SC	14	R12
29	RASP_IO05	14	V8
30	GND	—	—
31	RASP_IO06	14	W8
32	RASP_IO12	2	U5
33	RASP_IO13	14	R9
34	GND	—	—
35	RASP_IO19	14	R11
36	RASP_IO16	0	W2 (refer to Appendix C)
37	RASP_IO26	14	T9
38	RASP_IO20	0	T6
39	GND	—	—
40	RASP_IO21	0	U6

© 2023-2024 Lattice Semiconductor Corp. All Lattice trademarks, registered trademarks, patents, and disclaimers are as listed at www.latticesemi.com/legal.
All other brand or product names are trademarks or registered trademarks of their respective holders. The specifications and information herein are subject to change without notice.

Notes:
1. 3.3 V and 5 V provide power to the Raspberry PI board when JP12 and JP13 are installed. When JP12 and JP13 are not installed, the Raspberry PI needs its own 3.3 V and 5 V power.
2. When JP65 = 1–2, RASP_IO04 is routed to Ball U3.

When connecting directly to a Raspberry PI board, depending on the individual setup, an adapter may be needed to avoid mechanical interference between the two boards. A generic 40-pin (2×20), 100-mil spacing header extender serves this function. Alternately, the two boards can be connected by a length of ribbon cable with 2×20 connectors on either end.

9.6. External Flash Configuration Header

Table 9.6. SPI Flash Configuration Header Pin Connections

J3 Pin Name	Signal Name	Avant Bank	Avant Ball Location
1	PROGRAMN	1	R8
2	FLASH_CS[1]	—	—
3	—	—	—
4	DONE	2	U4
5	DQ0_MOSI	1	L12
6	INITN	2	T5
7	DQ1_MISO	1	L11
8	CSSPIN	1	P7
9	DQ3	1	L9
10	VCCIO1_IN	—	—
11	DQ2	1	L10
12	SPI_MCLK	1	P9
13	GND	—	—
14	GND	—	—

Note:
1. Connected to Pin 1 of the Flash (U4) device. It can be connected to the Avant FPGA through JP51.

9.7. PMOD Header

J6 and J7 headers can be used as GPIOs or as a connectors for PMOD interfaces.

Table 9.7. PMOD Header Pin Connections

Pin Name		Signal Name	Avant Bank	Avant Ball Location
J6	1	PMOD2_1	12	P18
	2	PMOD2_2	12	N19
	3	PMOD2_3	12	N20
	4	PMOD2_4	12	P20
	7	PMOD2_5	12	R17
	8	PMOD2_6	12	M19
	9	PMOD2_7	12	M20
	10	PMOD2_8	12	P19
J7	1	PMOD3_1	12	P14
	2	PMOD3_2	12	N15
	3	PMOD3_3	12	N16
	4	PMOD3_4	12	R16
	7	PMOD3_5	12	P13
	8	PMOD3_6	12	N14
	9	PMOD3_7	12	P15

© 2023-2024 Lattice Semiconductor Corp. All Lattice trademarks, registered trademarks, patents, and disclaimers are as listed at www.latticesemi.com/legal.
All other brand or product names are trademarks or registered trademarks of their respective holders. The specifications and information herein are subject to change without notice.

Pin Name		Signal Name	Avant Bank	Avant Ball Location
	10	PMOD3_8	12	N17

9.8. Through Hole Extended Area Header

Table 9.8. Through Hole Extended Area Header Pin Connections

Pin Name	Signal Name	Avant Bank	Avant Ball Location
TP_AN13	EPS1_AN13_P	6	AN13
TP_AP13	EPS1_AP13_N	6	AP13
TP_AJ16	EPS2_AJ16_P	6	AJ16
TP_AK16	EPS2_AK16_N	6	AK16
TP_AL13	EPS3_AL13_P	6	AL13
TP_AM13	EPS3_AM13_N	6	AM13
TP_AG15	EPS4_AG15_P	6	AG15
TP_AH15	EPS4_AH15_N	6	AH15
TP_AK13	EPS5_AK13_P	6	AK13
TP_AK12	EPS5_AK12_N	6	AK12
TP_AF15	EPS6_AF15_P	6	AF15
TP_AF16	EPS6_AF16_N	6	AF16
TP_AP12	EPS7_AP12_P	6	AP12
TP_AN12	EPS7_AN12_N	6	AN12
TP_AH14	EPS8_AH14_P	6	AH14
TP_AG14	EPS8_AG14_N	6	AG14
TP_AP10	EPS9_AP10_P	6	AP10
TP_AP11	EPS9_AP11_N	6	AP11
TP_AK14	EPS10_AK14_P	6	AK14
TP_AK15	EPS10_AK15_N	6	AK15
TP_AE15	EPS11_AE15_P	6	AE15
TP_AD15	EPS11_AD15_N	6	AD15
TP_AL10	EPS12_AL10_P	6	AL10
TP_AL11	EPS12_AL11_N	6	AL11
0V82	VCC_0V82	—	—
0V9	VCC_0V90	—	—
1V	VCC_1V00	—	—
1V1	VCC_1V10	—	—
1V2	VCC_1V20	—	—
1V35	VCC_1V35	—	—
1V5	VCC_1V50	—	—
1V8	VCC_1V80	—	—
2V5	VCC_2V50	—	—
3V3	VCC_3V30	—	—
F1_3V3	VFMC1_3V30	—	—
F2_3V3	VFMC2_3V30	—	—
F1_3V3AUX	VFMC1_3V30AUX	—	—
F2_3V3AUX	VFMC2_3V30AUX	—	—
F1_ADJ	VFMC1_ADJ	—	—

© 2023-2024 Lattice Semiconductor Corp. All Lattice trademarks, registered trademarks, patents, and disclaimers are as listed at www.latticesemi.com/legal.
All other brand or product names are trademarks or registered trademarks of their respective holders. The specifications and information herein are subject to change without notice.

Pin Name	Signal Name	Avant Bank	Avant Ball Location
F2_ADJ	VFMC2_ADJ	—	—
5V	VCC_5V00	—	—
12V	VCC_12V00	—	—
GND6	GND	—	—
GND7	GND	—	—
GND8	GND	—	—
GND9	GND	—	—
GND10	GND	—	—
GND11	GND	—	—
GND12	GND	—	—
GND13	GND	—	—
GND14	GND	—	—
GND15	GND	—	—

© 2023-2024 Lattice Semiconductor Corp. All Lattice trademarks, registered trademarks, patents, and disclaimers are as listed at www.latticesemi.com/legal.
All other brand or product names are trademarks or registered trademarks of their respective holders. The specifications and information herein are subject to change without notice.

10. Software Requirements

The following software versions are required to develop designs for the Avant Evaluation Board:

- Lattice Radiant Software 2023.2 or later
- Lattice Radiant Programmer 2023.2 or later
- Lattice Diamond Software 3.13 or later
- Lattice Diamond Programmer 3.13 or later

11. Storage and Handling

Static electricity can shorten the life span of electronic components. Observe these tips to prevent damage that can occur from electrostatic discharge:

- Use antistatic precautions, such as operating on an antistatic mat and wearing an antistatic wristband.
- Store the development board in the provided packaging.
- Touch a metal USB housing to equalize the voltage potential between you and the board.

12. Ordering Information

Table 12.1. Ordering Information

Description	Ordering Part Number	China RoHS Environment-Friendly Use Period (EFUP)
Avant Evaluation Board	LAV-E70-EVN	

© 2023-2024 Lattice Semiconductor Corp. All Lattice trademarks, registered trademarks, patents, and disclaimers are as listed at www.latticesemi.com/legal.
All other brand or product names are trademarks or registered trademarks of their respective holders. The specifications and information herein are subject to change without notice.

Appendix A. Avant Evaluation Board Schematics

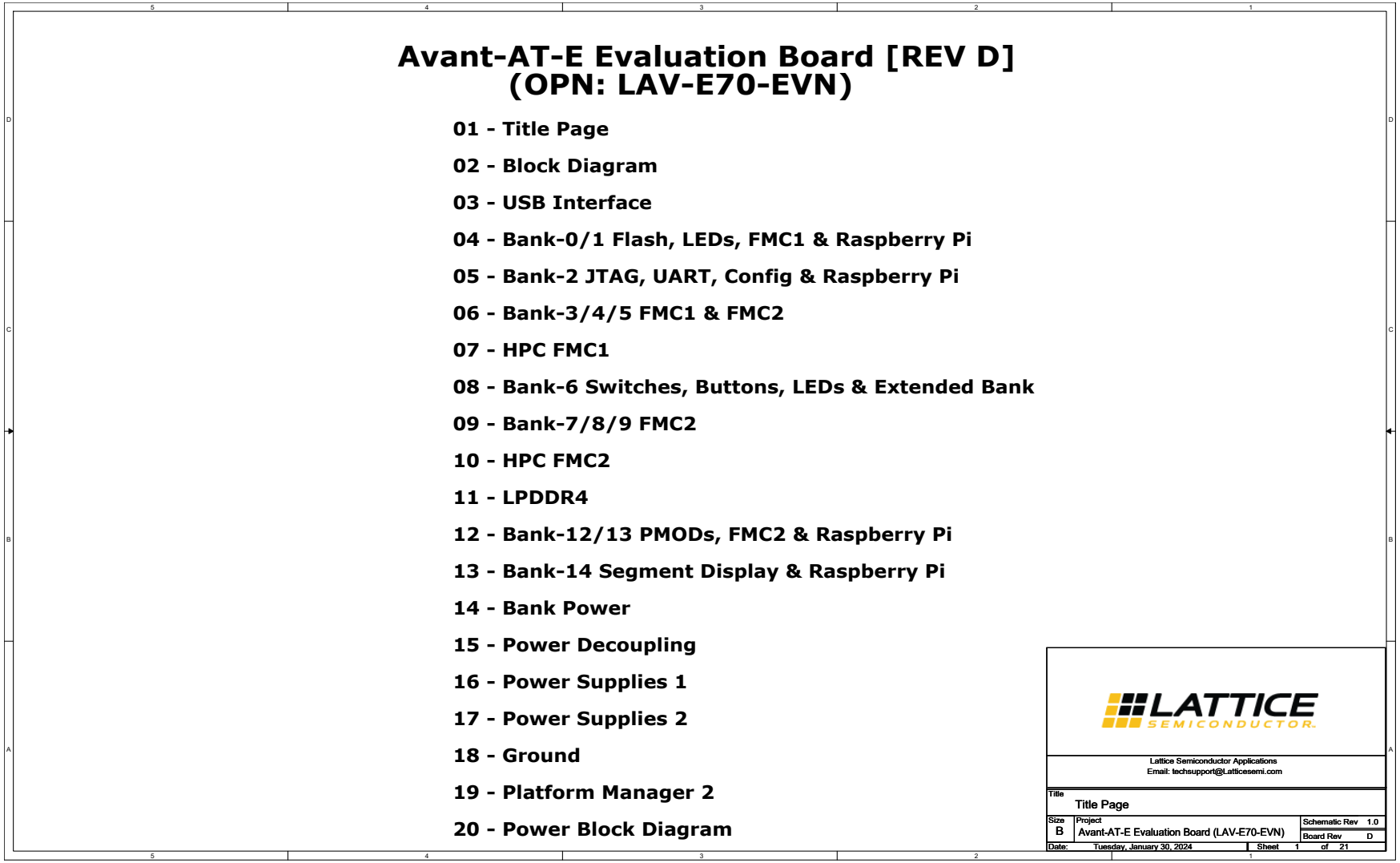

Figure A.1. Title Page

© 2023-2024 Lattice Semiconductor Corp. All Lattice trademarks, registered trademarks, patents, and disclaimers are as listed at www.latticesemi.com/legal.
All other brand or product names are trademarks or registered trademarks of their respective holders. The specifications and information herein are subject to change without notice.

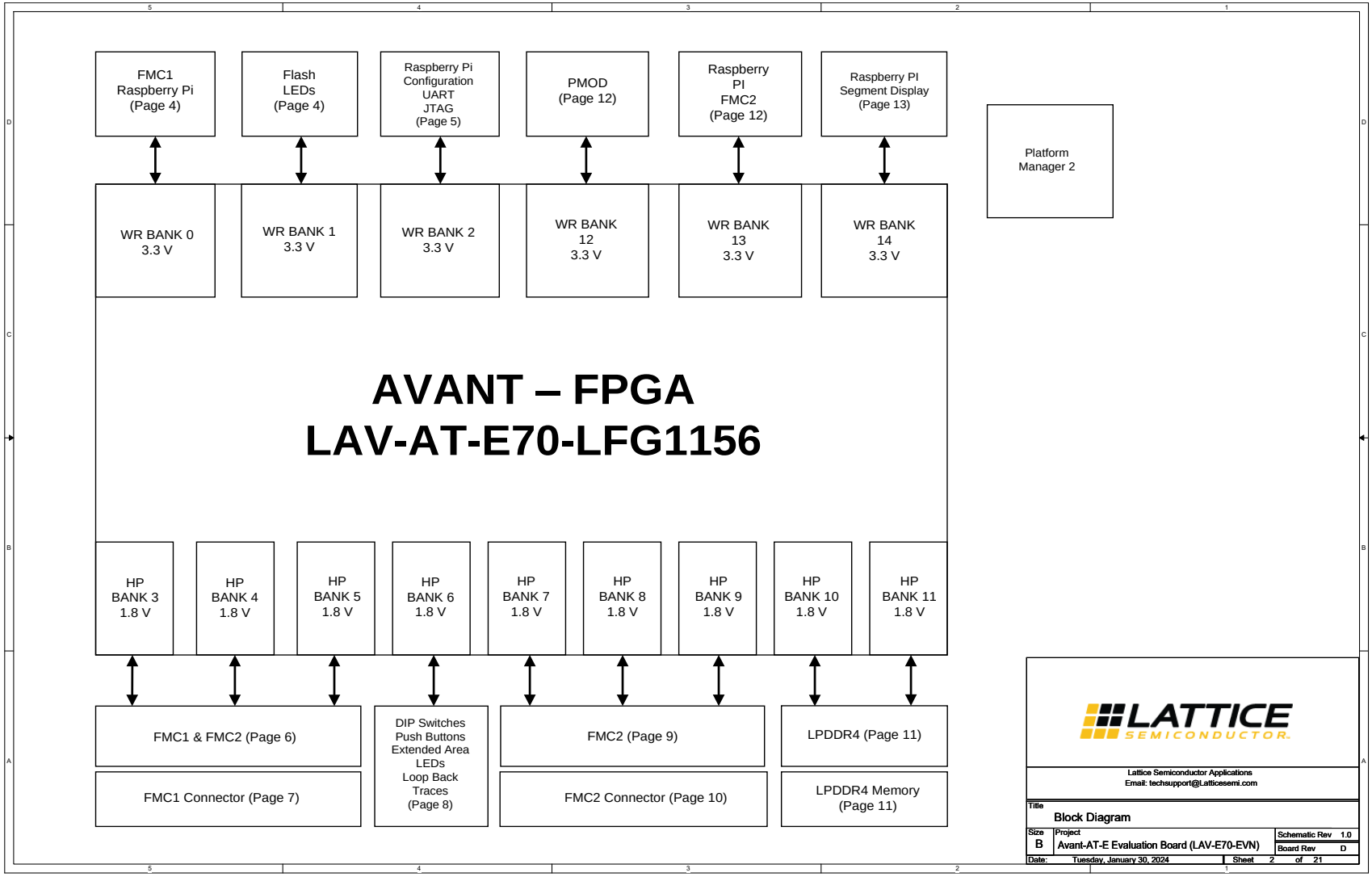

Figure A.2. Block Diagram

© 2023-2024 Lattice Semiconductor Corp. All Lattice trademarks, registered trademarks, patents, and disclaimers are as listed at www.latticesemi.com/legal.
All other brand or product names are trademarks or registered trademarks of their respective holders. The specifications and information herein are subject to change without notice.

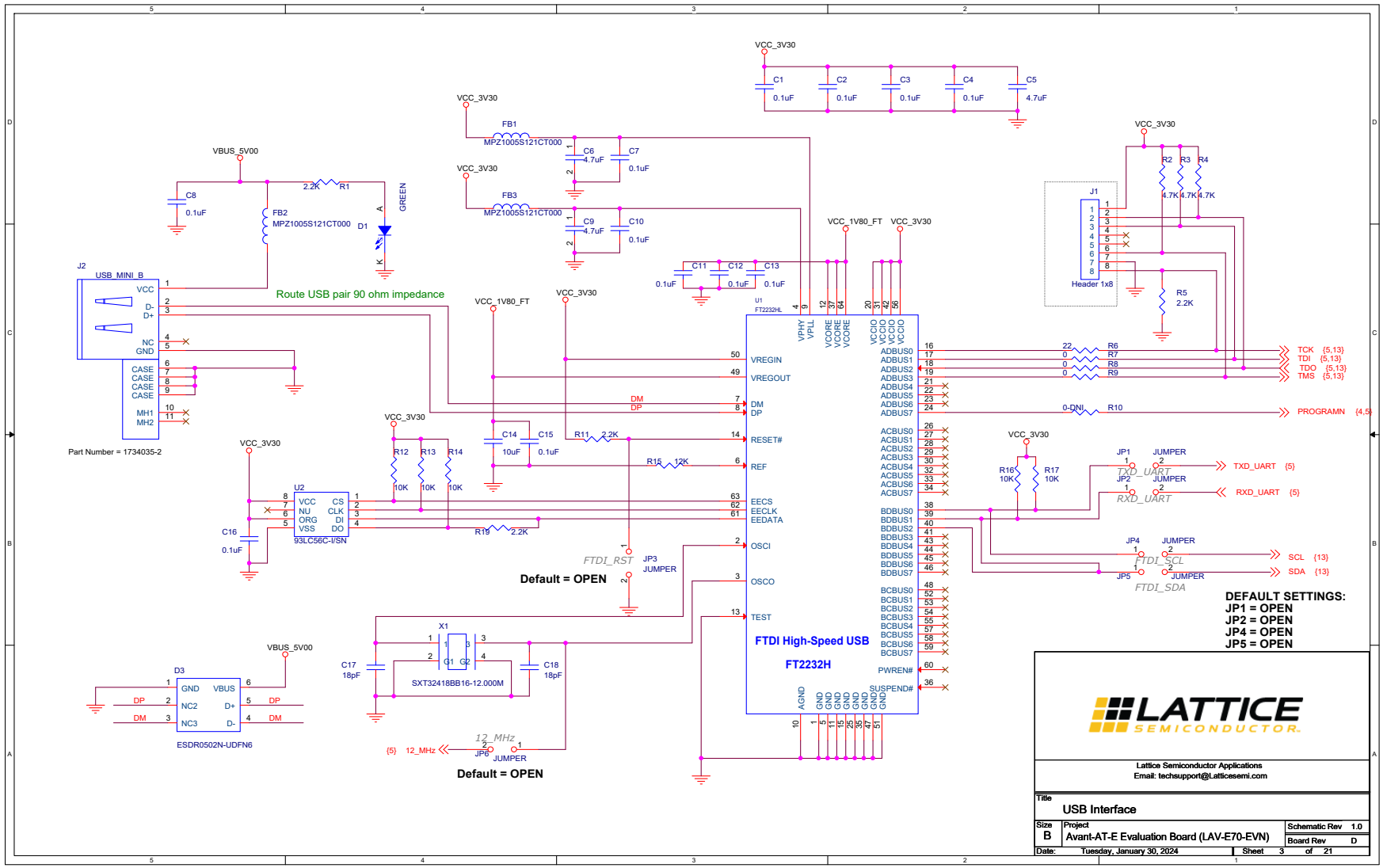

Figure A.3. USB Interface

© 2023-2024 Lattice Semiconductor Corp. All Lattice trademarks, registered trademarks, patents, and disclaimers are as listed at www.latticesemi.com/legal.
All other brand or product names are trademarks or registered trademarks of their respective holders. The specifications and information herein are subject to change without notice.

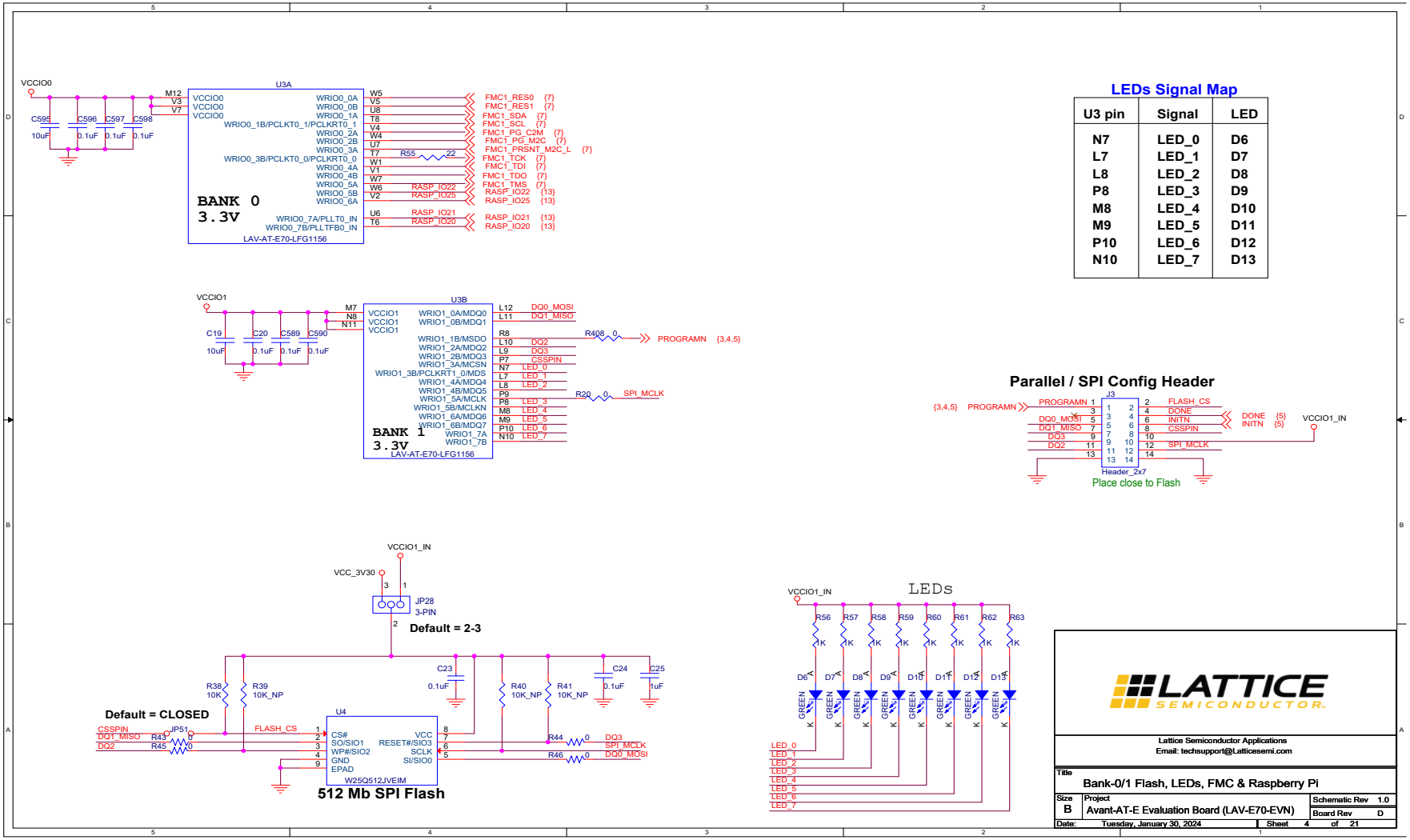

Figure A.4. Bank-0/1 Flash, LEDs, FMC & Raspberry Pi

© 2023-2024 Lattice Semiconductor Corp. All Lattice trademarks, registered trademarks, patents, and disclaimers are as listed at www.latticesemi.com/legal.
All other brand or product names are trademarks or registered trademarks of their respective holders. The specifications and information herein are subject to change without notice.

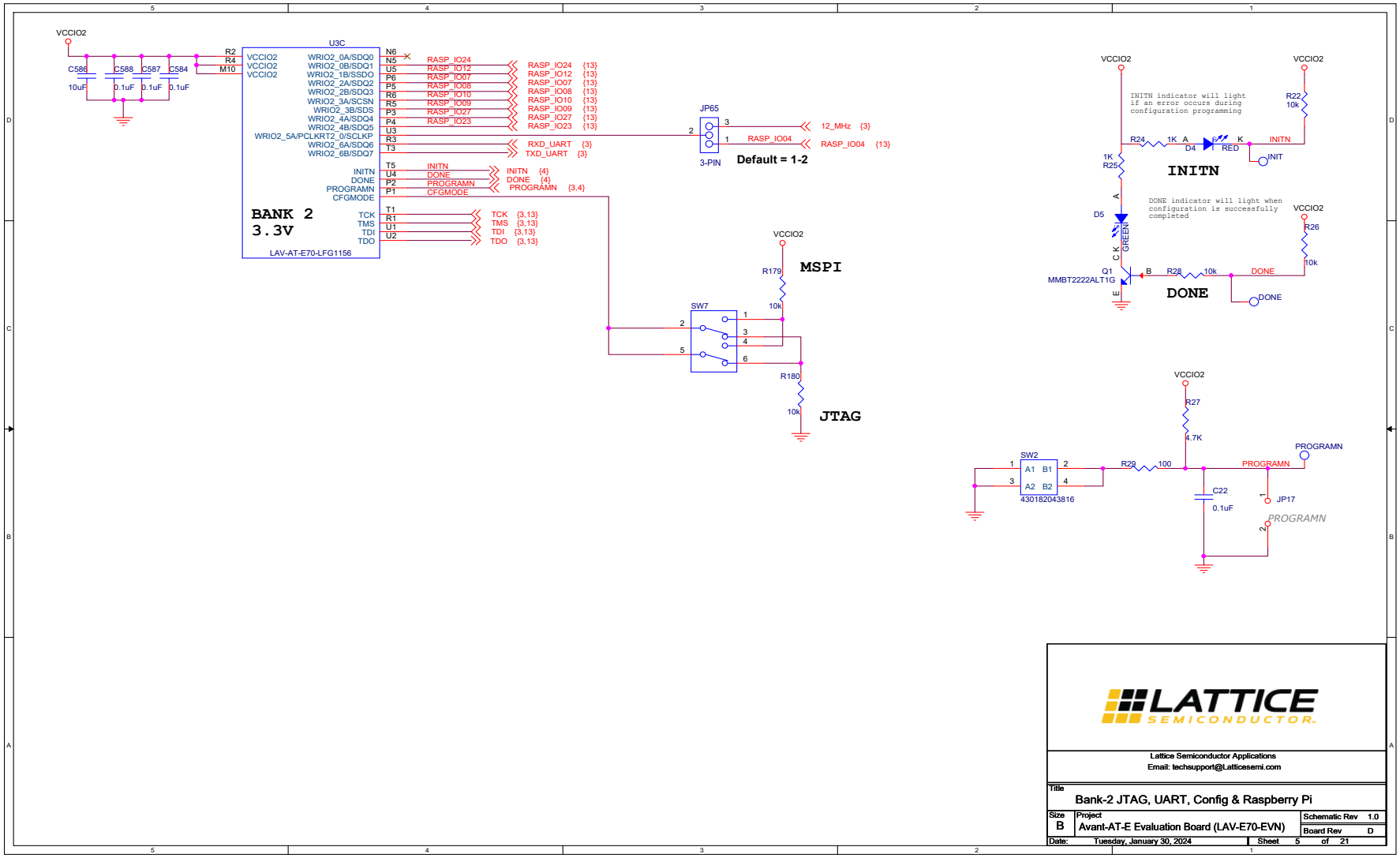

Figure A.5. Bank-2 JTAG, UART, Config & Raspberry Pi

© 2023-2024 Lattice Semiconductor Corp. All Lattice trademarks, registered trademarks, patents, and disclaimers are as listed at www.latticesemi.com/legal.
All other brand or product names are trademarks or registered trademarks of their respective holders. The specifications and information herein are subject to change without notice.

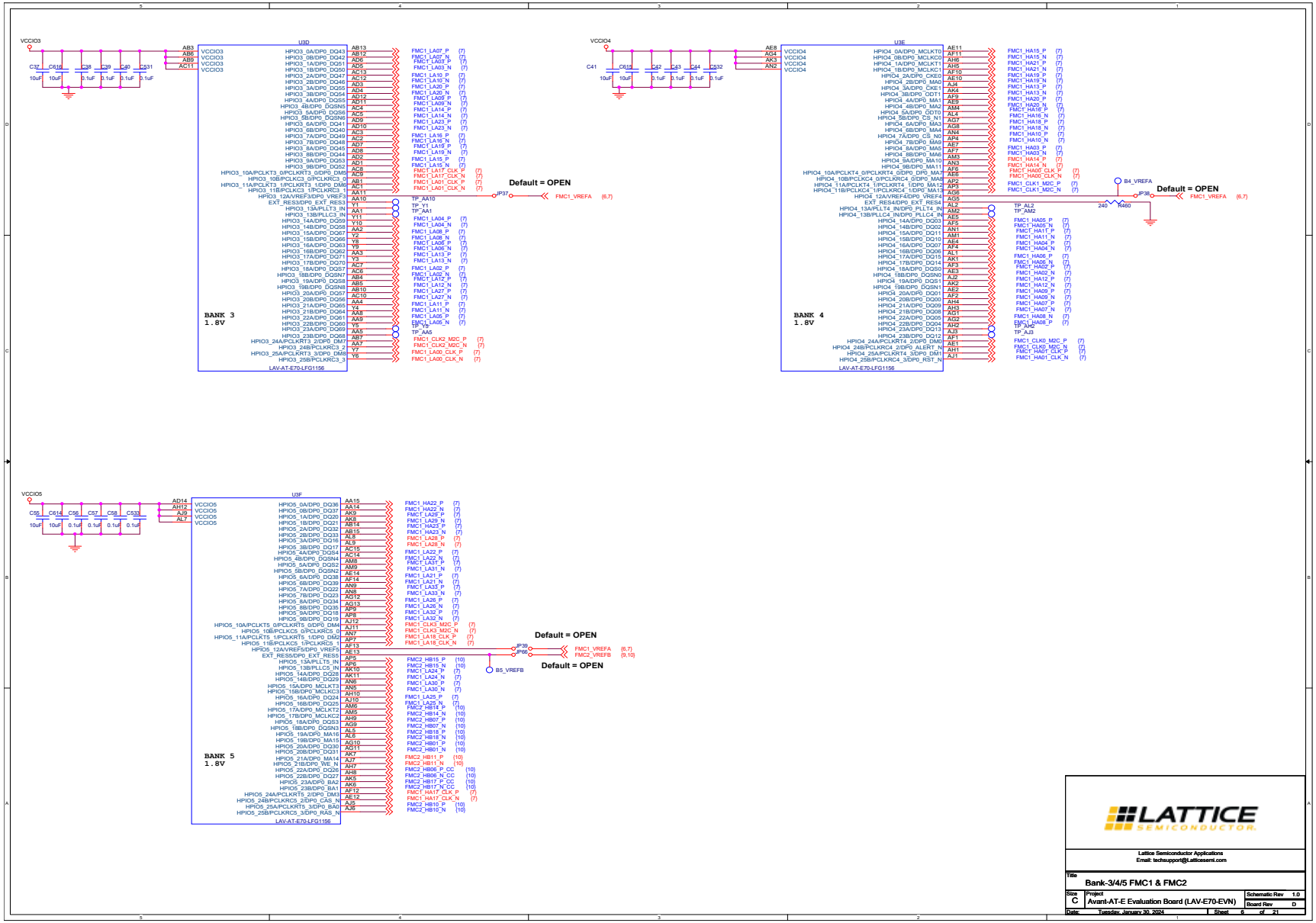

Figure A.6. Bank-3/4/5 FMC1 & FMC2

© 2023-2024 Lattice Semiconductor Corp. All Lattice trademarks, registered trademarks, patents, and disclaimers are as listed at www.latticesemi.com/legal.
All other brand or product names are trademarks or registered trademarks of their respective holders. The specifications and information herein are subject to change without notice.

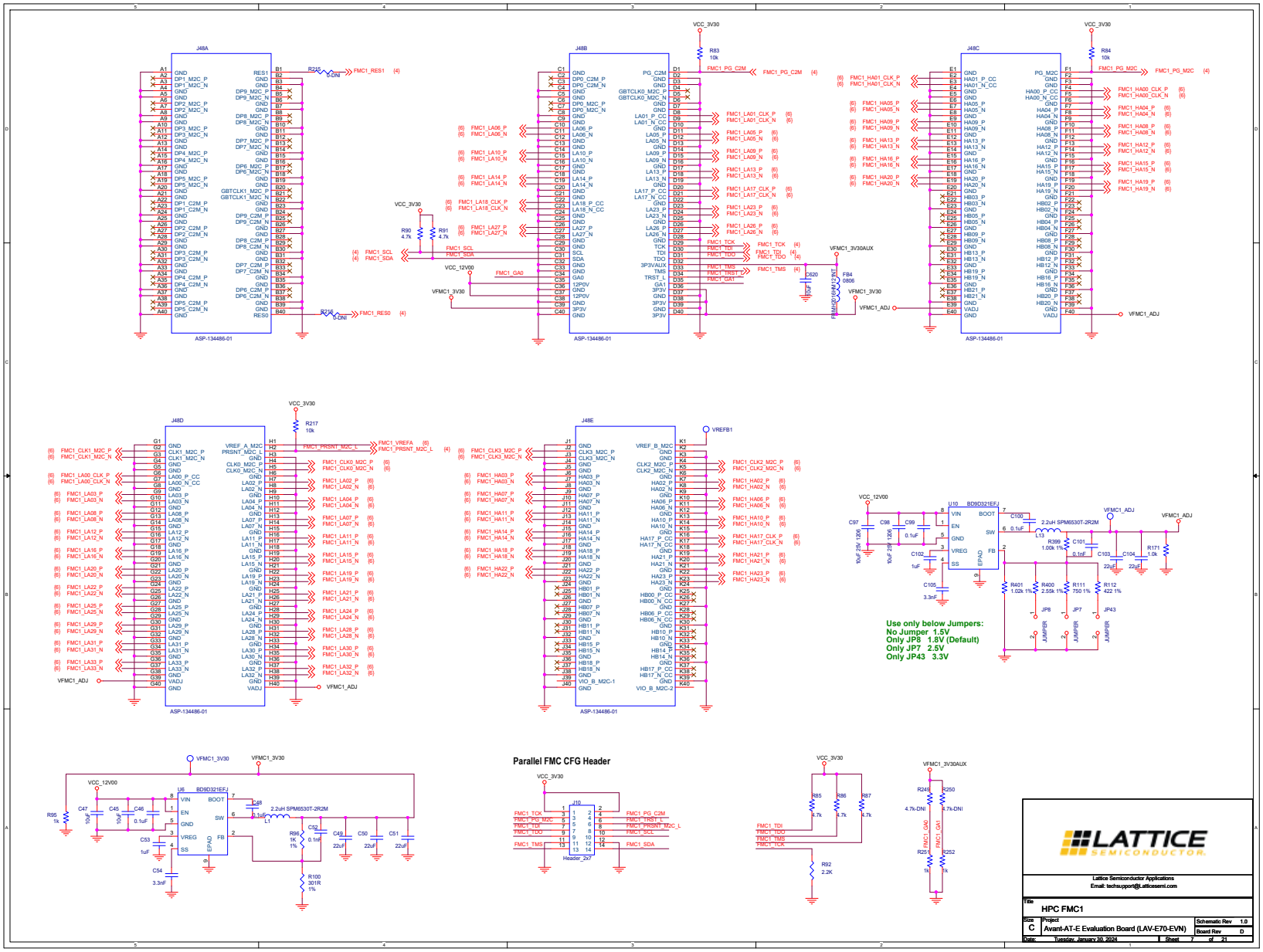

Figure A.7. HPC FMC1

© 2023-2024 Lattice Semiconductor Corp. All Lattice trademarks, registered trademarks, patents, and disclaimers are as listed at www.latticesemi.com/legal.
All other brand or product names are trademarks or registered trademarks of their respective holders. The specifications and information herein are subject to change without notice.

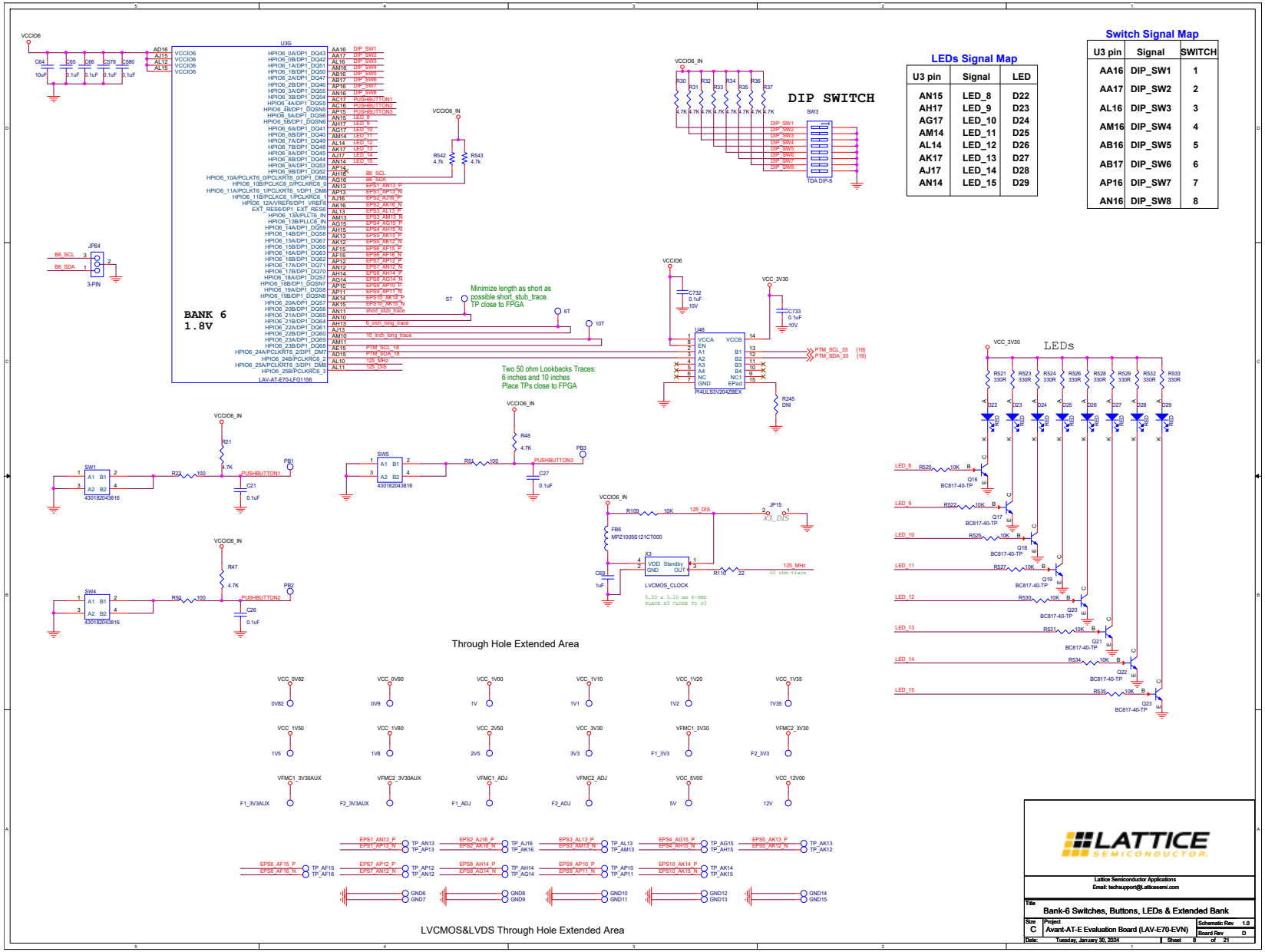

LEDs Signal Map

U3 pin	Signal	LED
AN15	LED_8	D22
AH17	LED_9	D23
AG17	LED_10	D24
AM14	LED_11	D25
AL14	LED_12	D26
AK17	LED_13	D27
AJ17	LED_14	D28
AN14	LED_15	D29

Switch Signal Map

U3 pin	Signal	SWITCH
AA16	DIP_SW1	1
AA17	DIP_SW2	2
AL16	DIP_SW3	3
AM16	DIP_SW4	4
AB16	DIP_SW5	5
AB17	DIP_SW6	6
AP16	DIP_SW7	7
AN16	DIP_SW8	8

Figure A.8. Bank-6 Switches, Buttons, LEDs & Extended Bank

© 2023-2024 Lattice Semiconductor Corp. All Lattice trademarks, registered trademarks, patents, and disclaimers are as listed at www.latticesemi.com/legal.
All other brand or product names are trademarks or registered trademarks of their respective holders. The specifications and information herein are subject to change without notice.

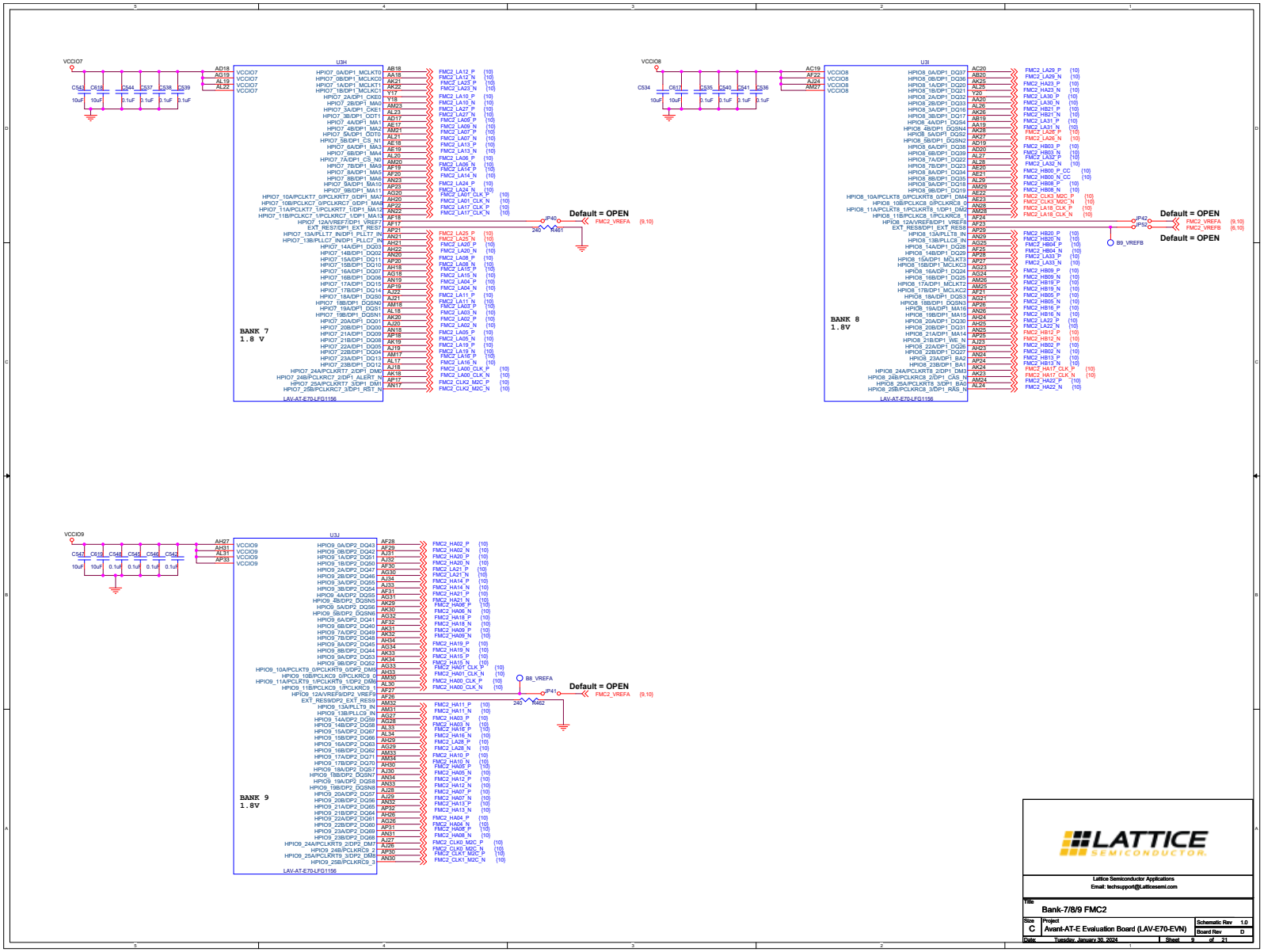

Figure A.9. Bank-7/8/9 FMC2

© 2023-2024 Lattice Semiconductor Corp. All Lattice trademarks, registered trademarks, patents, and disclaimers are as listed at www.latticesemi.com/legal.
All other brand or product names are trademarks or registered trademarks of their respective holders. The specifications and information herein are subject to change without notice.

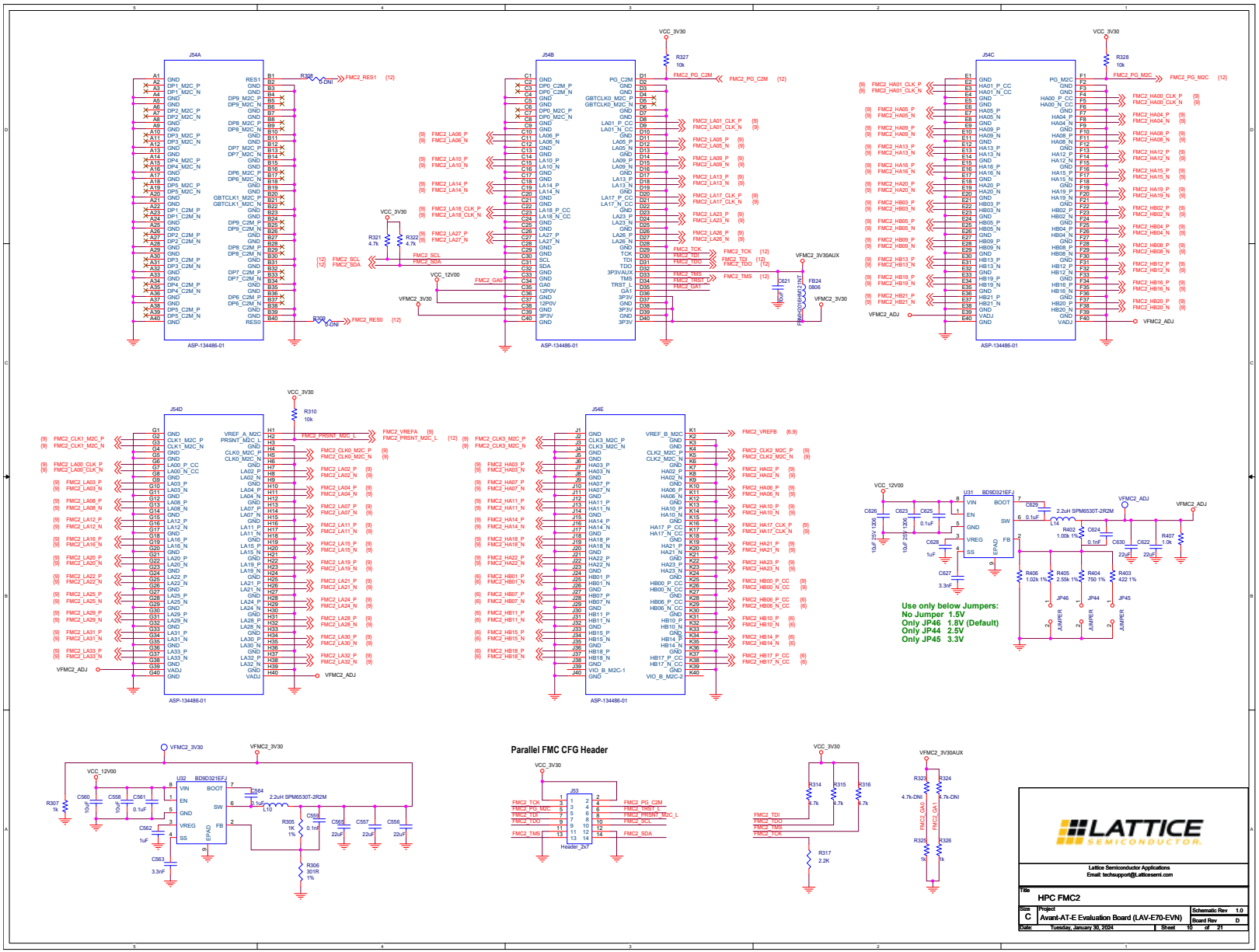

Figure A.10. HPC FMC2

© 2023-2024 Lattice Semiconductor Corp. All Lattice trademarks, registered trademarks, patents, and disclaimers are as listed at www.latticesemi.com/legal.
All other brand or product names are trademarks or registered trademarks of their respective holders. The specifications and information herein are subject to change without notice.

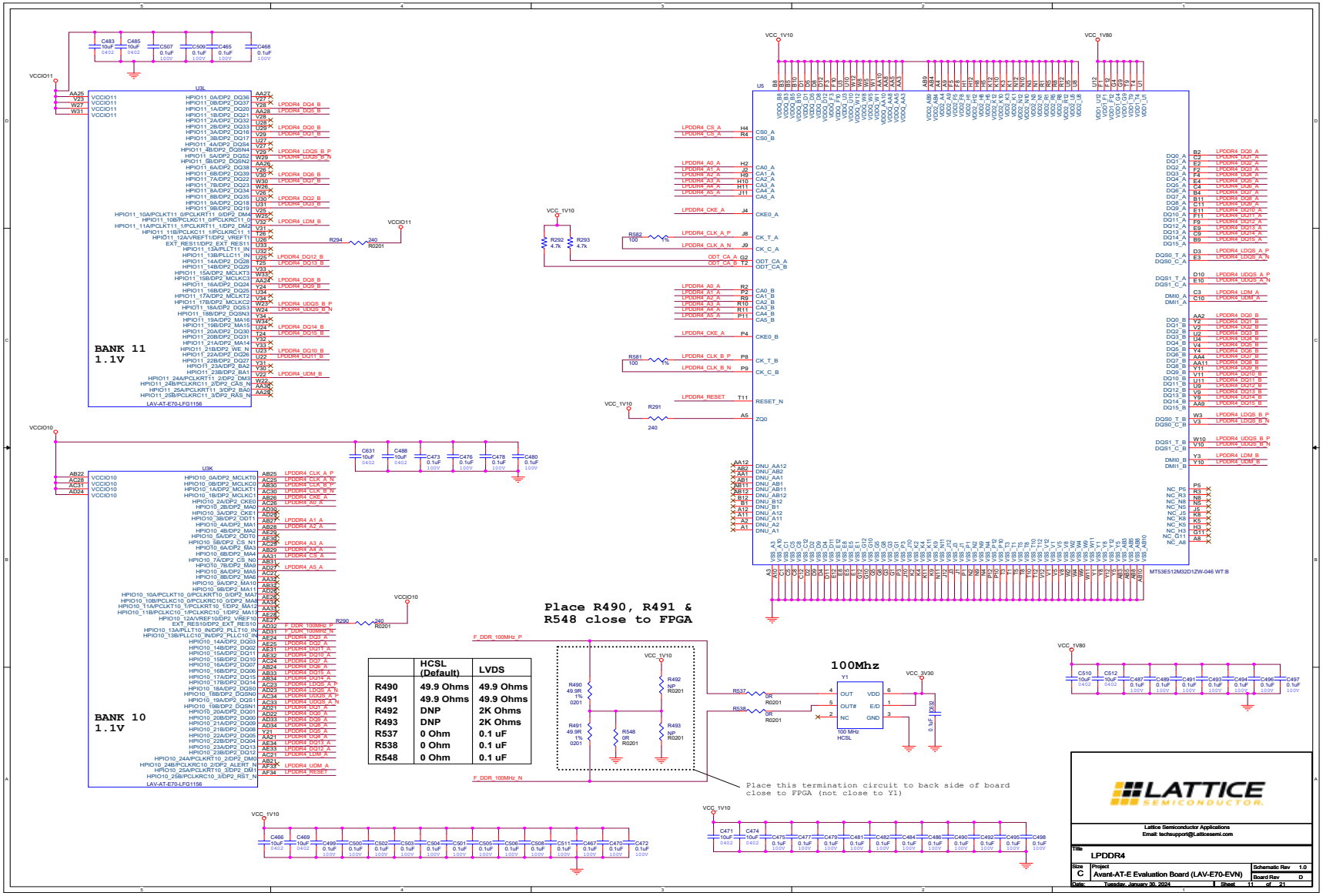

	HCSL (Default)	LVDS
R490	49.9 Ohms	49.9 Ohms
R491	49.9 Ohms	49.9 Ohms
R492	DNP	2K Ohms
R493	DNP	2K Ohms
R537	0 Ohm	0.1 uF
R538	0 Ohm	0.1 uF
R548	0 Ohm	0.1 uF

Figure A.11. LPDDR4

© 2023-2024 Lattice Semiconductor Corp. All Lattice trademarks, registered trademarks, patents, and disclaimers are as listed at www.latticesemi.com/legal.
All other brand or product names are trademarks or registered trademarks of their respective holders. The specifications and information herein are subject to change without notice.

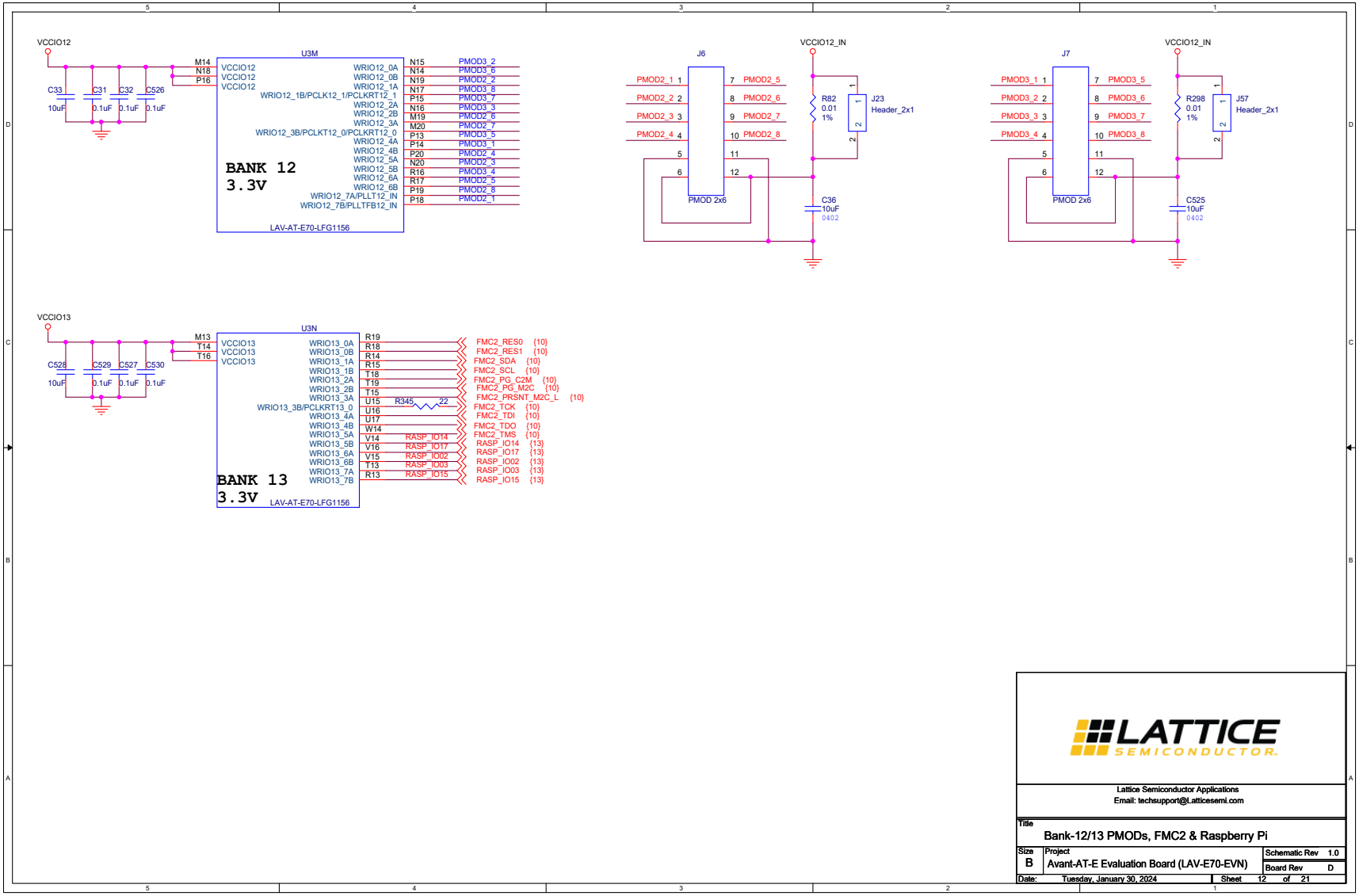

Figure A.12. Bank-12/13 PMODs, FMC2 & Raspberry Pi

© 2023-2024 Lattice Semiconductor Corp. All Lattice trademarks, registered trademarks, patents, and disclaimers are as listed at www.latticesemi.com/legal.
All other brand or product names are trademarks or registered trademarks of their respective holders. The specifications and information herein are subject to change without notice.

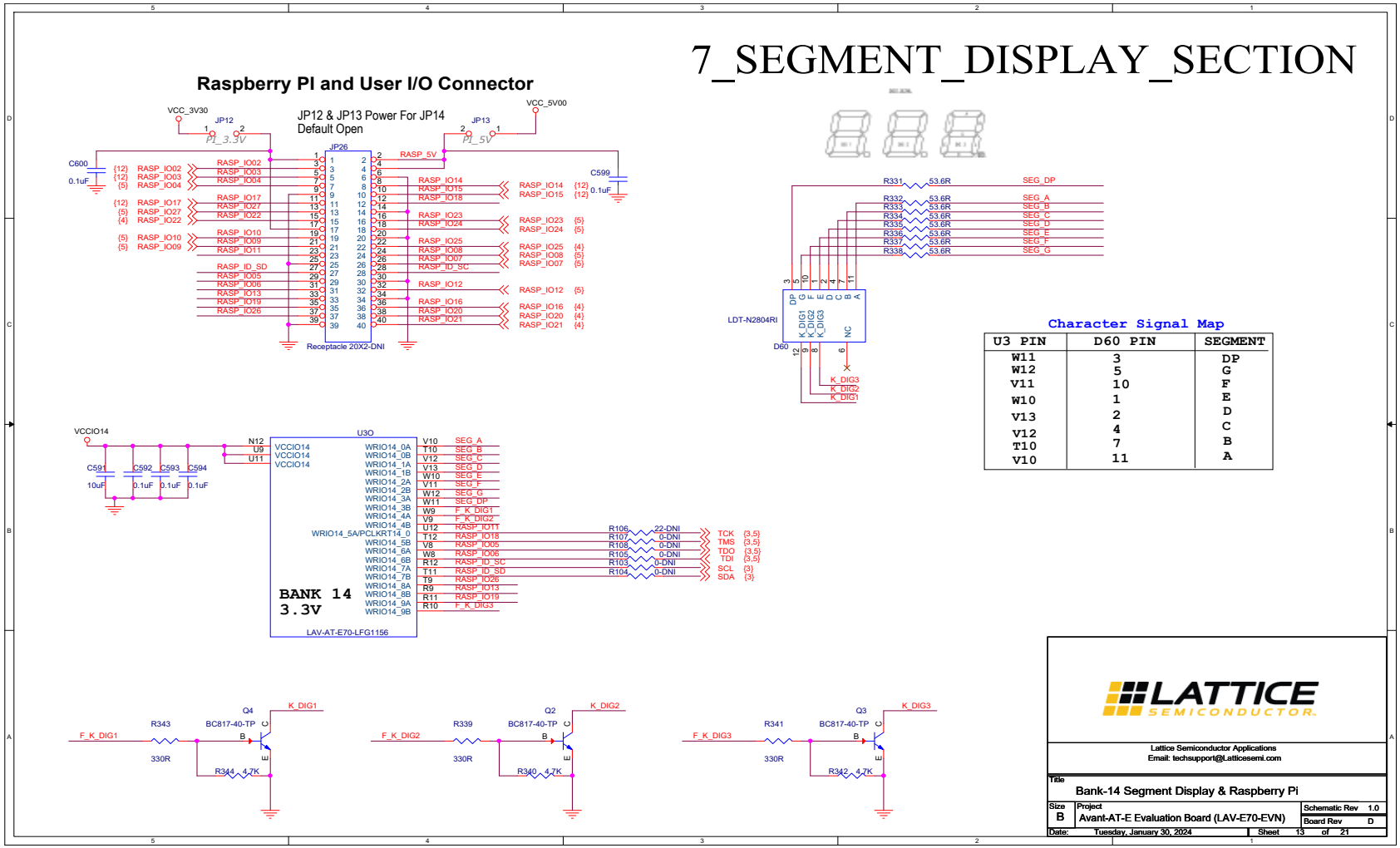

Figure A.13. Bank-14 Segment Display & Raspberry Pi

© 2023-2024 Lattice Semiconductor Corp. All Lattice trademarks, registered trademarks, patents, and disclaimers are as listed at www.latticesemi.com/legal.
All other brand or product names are trademarks or registered trademarks of their respective holders. The specifications and information herein are subject to change without notice.

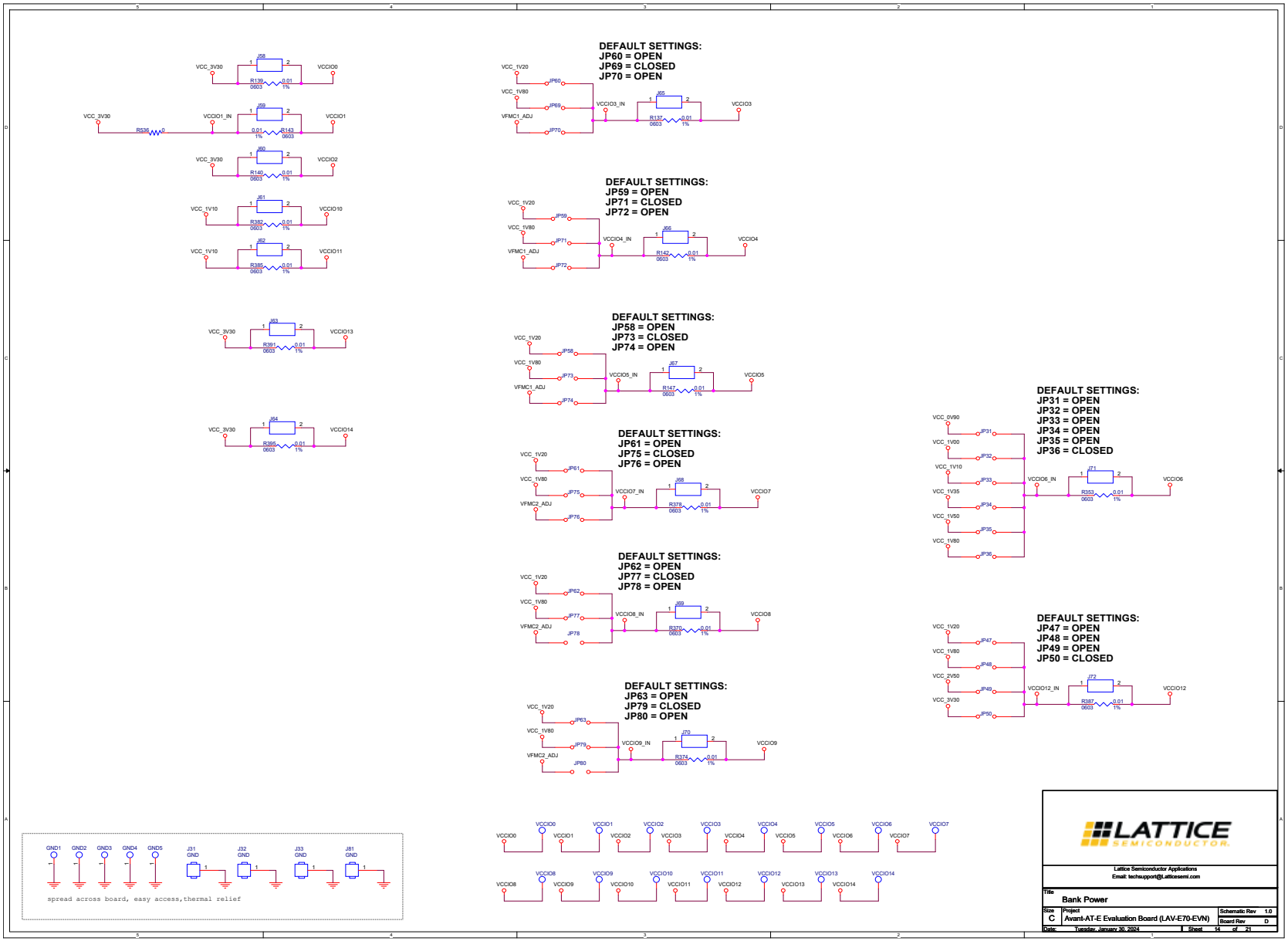

Figure A.14. Bank Power

© 2023-2024 Lattice Semiconductor Corp. All Lattice trademarks, registered trademarks, patents, and disclaimers are as listed at www.latticesemi.com/legal.
All other brand or product names are trademarks or registered trademarks of their respective holders. The specifications and information herein are subject to change without notice.

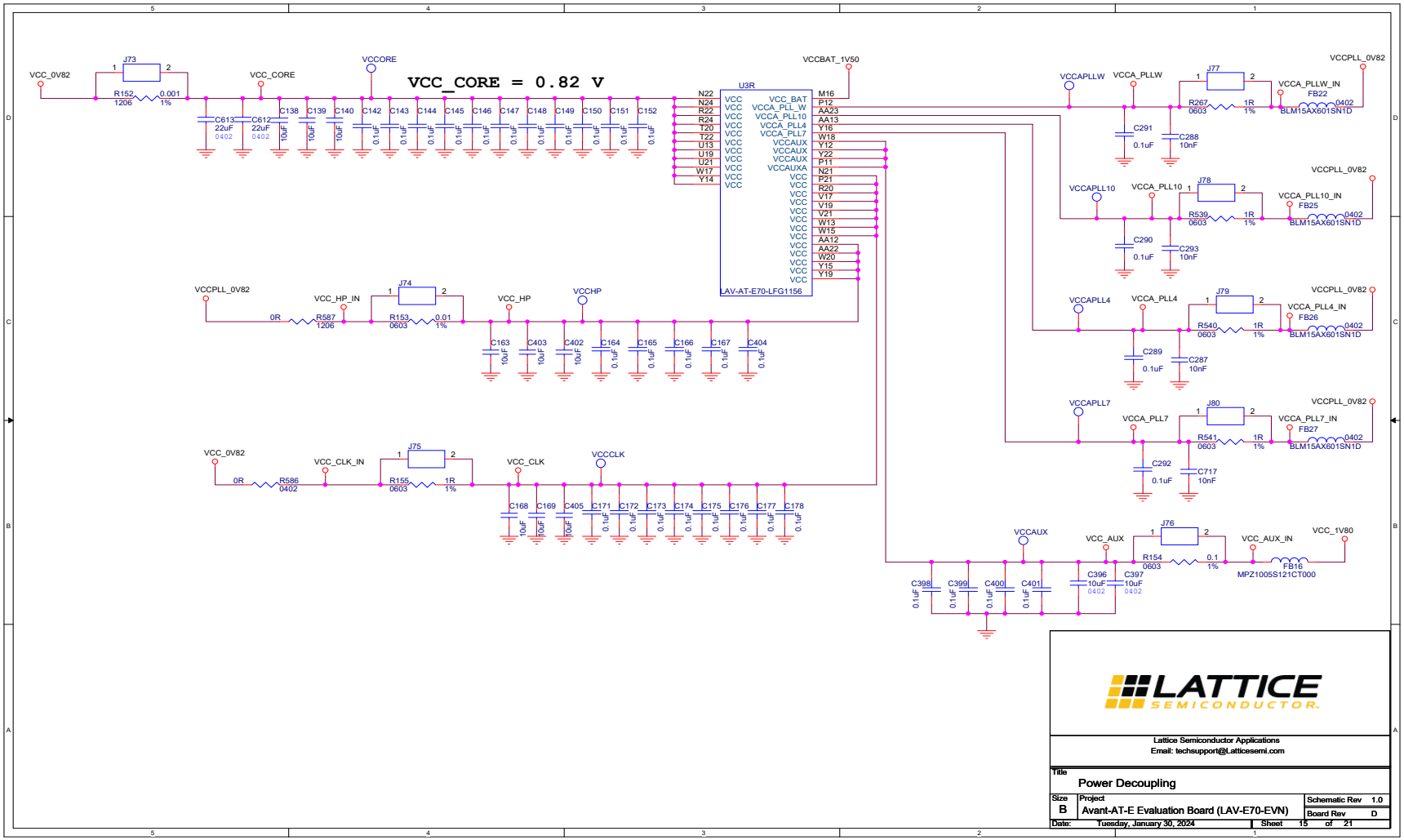

Figure A.15. Power Decoupling

© 2023-2024 Lattice Semiconductor Corp. All Lattice trademarks, registered trademarks, patents, and disclaimers are as listed at www.latticesemi.com/legal.
All other brand or product names are trademarks or registered trademarks of their respective holders. The specifications and information herein are subject to change without notice.

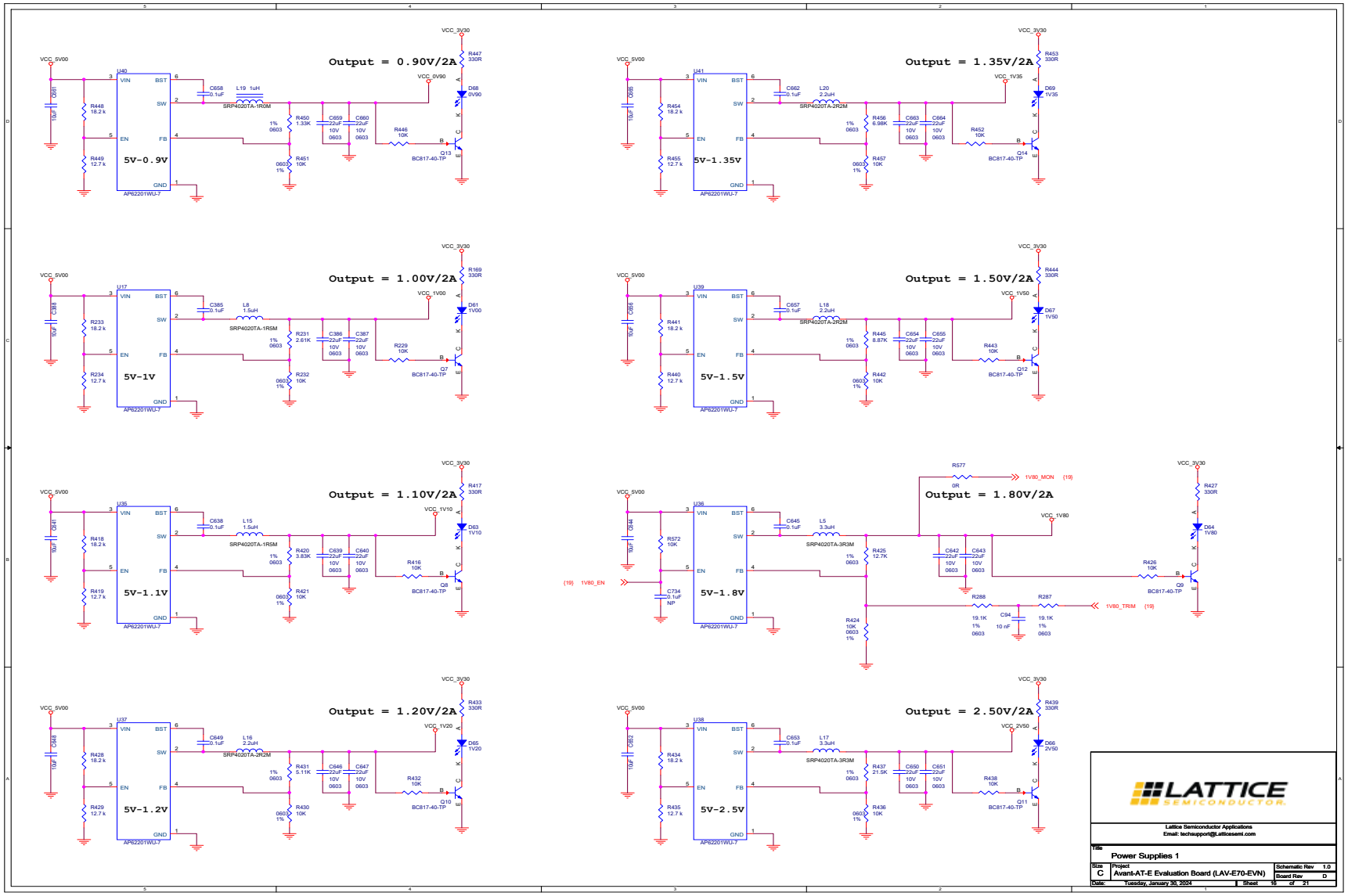

Figure A.16. Power Supplies 1

© 2023-2024 Lattice Semiconductor Corp. All Lattice trademarks, registered trademarks, patents, and disclaimers are as listed at www.latticesemi.com/legal.
All other brand or product names are trademarks or registered trademarks of their respective holders. The specifications and information herein are subject to change without notice.

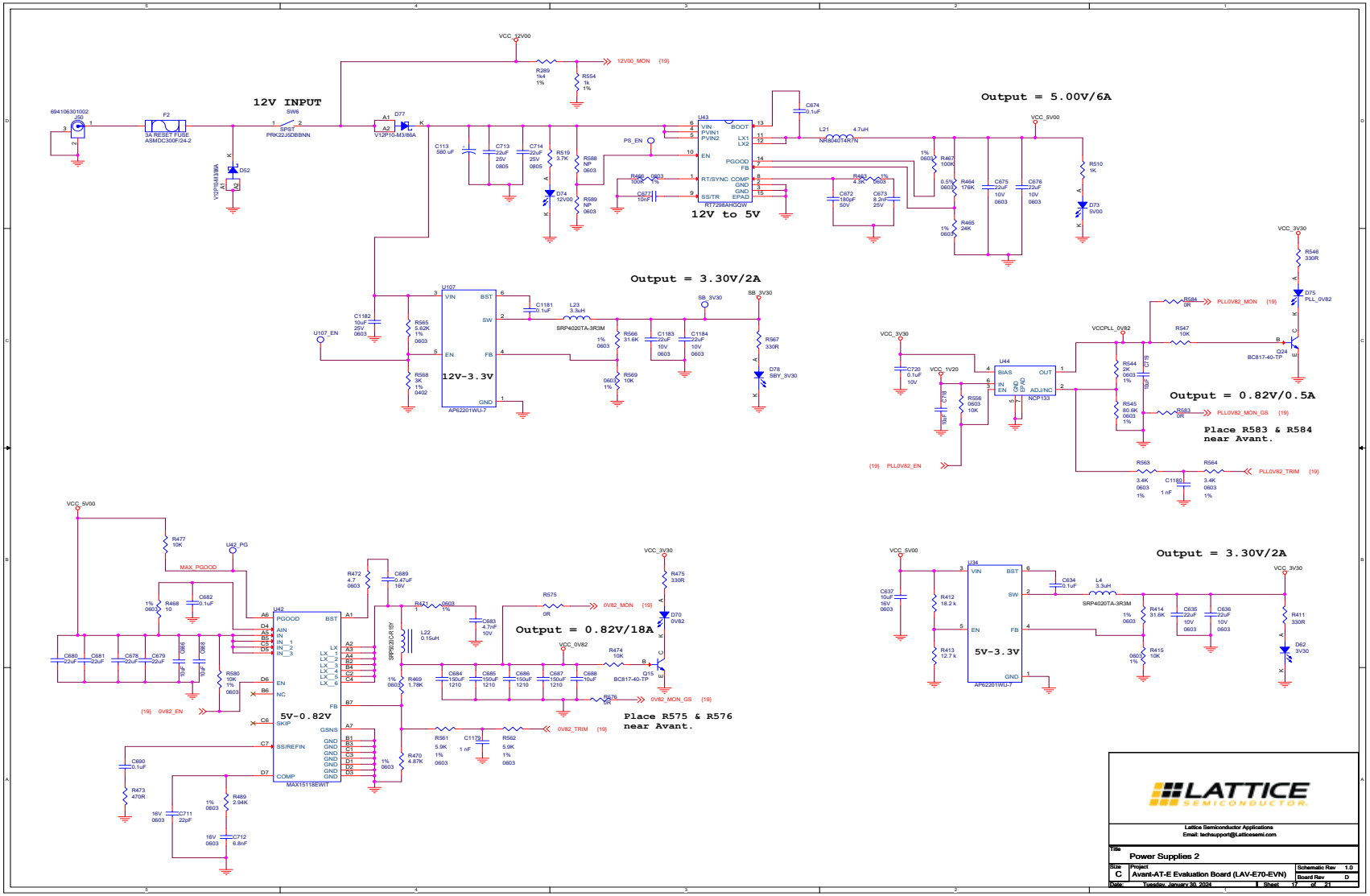

Figure A.17. Power Supplies 2

© 2023-2024 Lattice Semiconductor Corp. All Lattice trademarks, registered trademarks, patents, and disclaimers are as listed at www.latticesemi.com/legal.
All other brand or product names are trademarks or registered trademarks of their respective holders. The specifications and information herein are subject to change without notice.

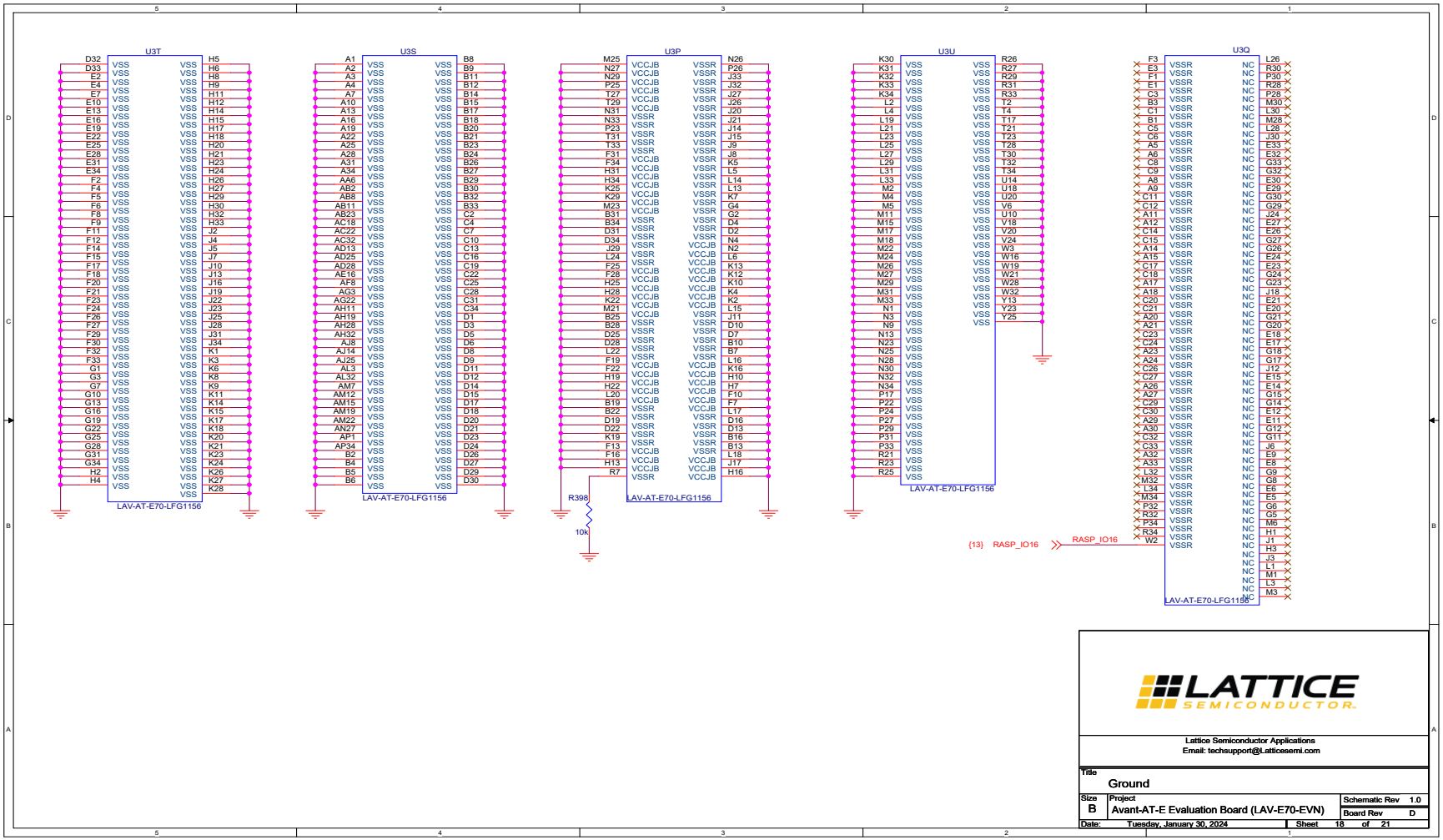

Figure A.18. Ground

© 2023-2024 Lattice Semiconductor Corp. All Lattice trademarks, registered trademarks, patents, and disclaimers are as listed at www.latticesemi.com/legal.
All other brand or product names are trademarks or registered trademarks of their respective holders. The specifications and information herein are subject to change without notice.

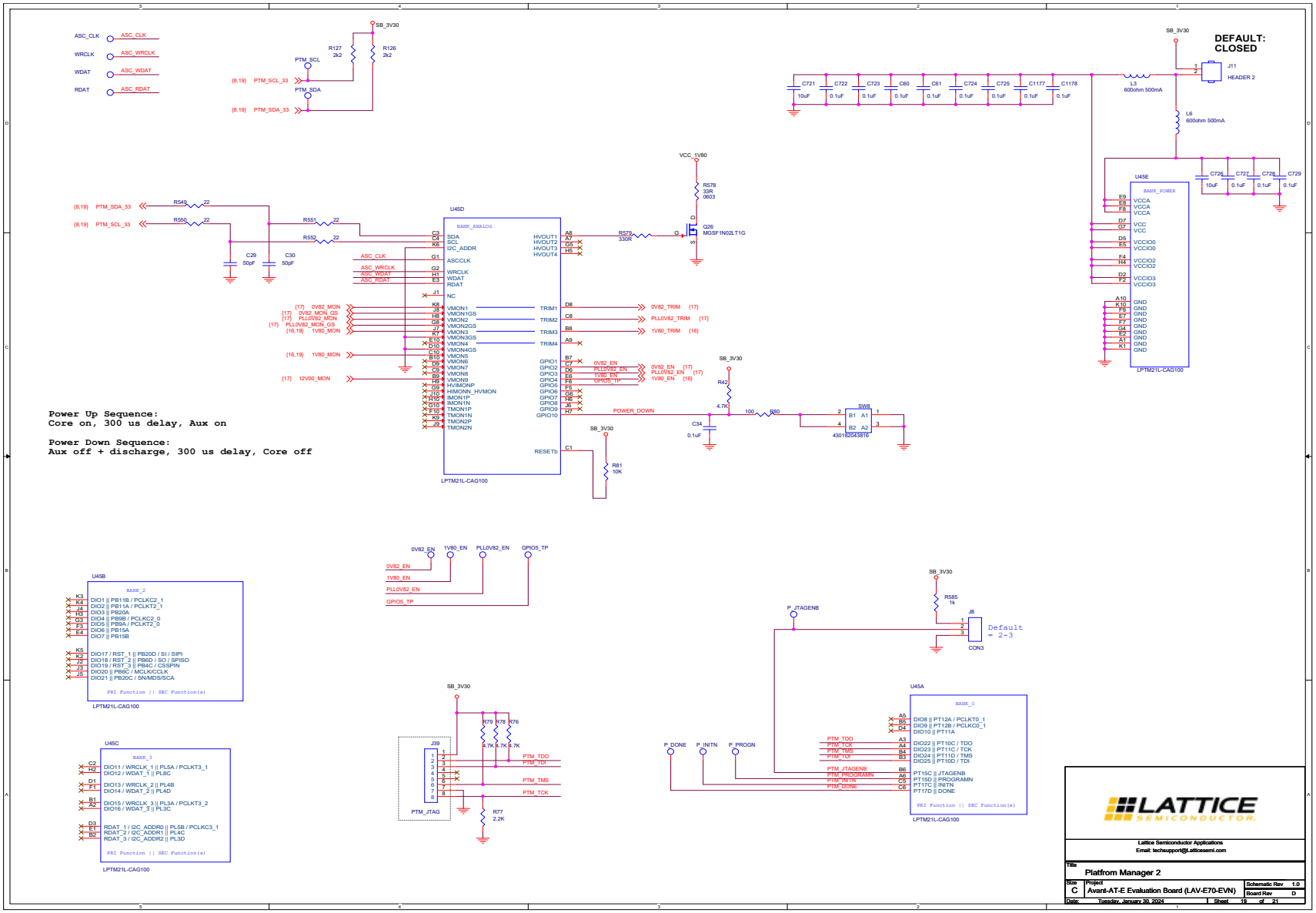

Figure A.19. Platform Manager 2

© 2023-2024 Lattice Semiconductor Corp. All Lattice trademarks, registered trademarks, patents, and disclaimers are as listed at www.latticesemi.com/legal.
All other brand or product names are trademarks or registered trademarks of their respective holders. The specifications and information herein are subject to change without notice.

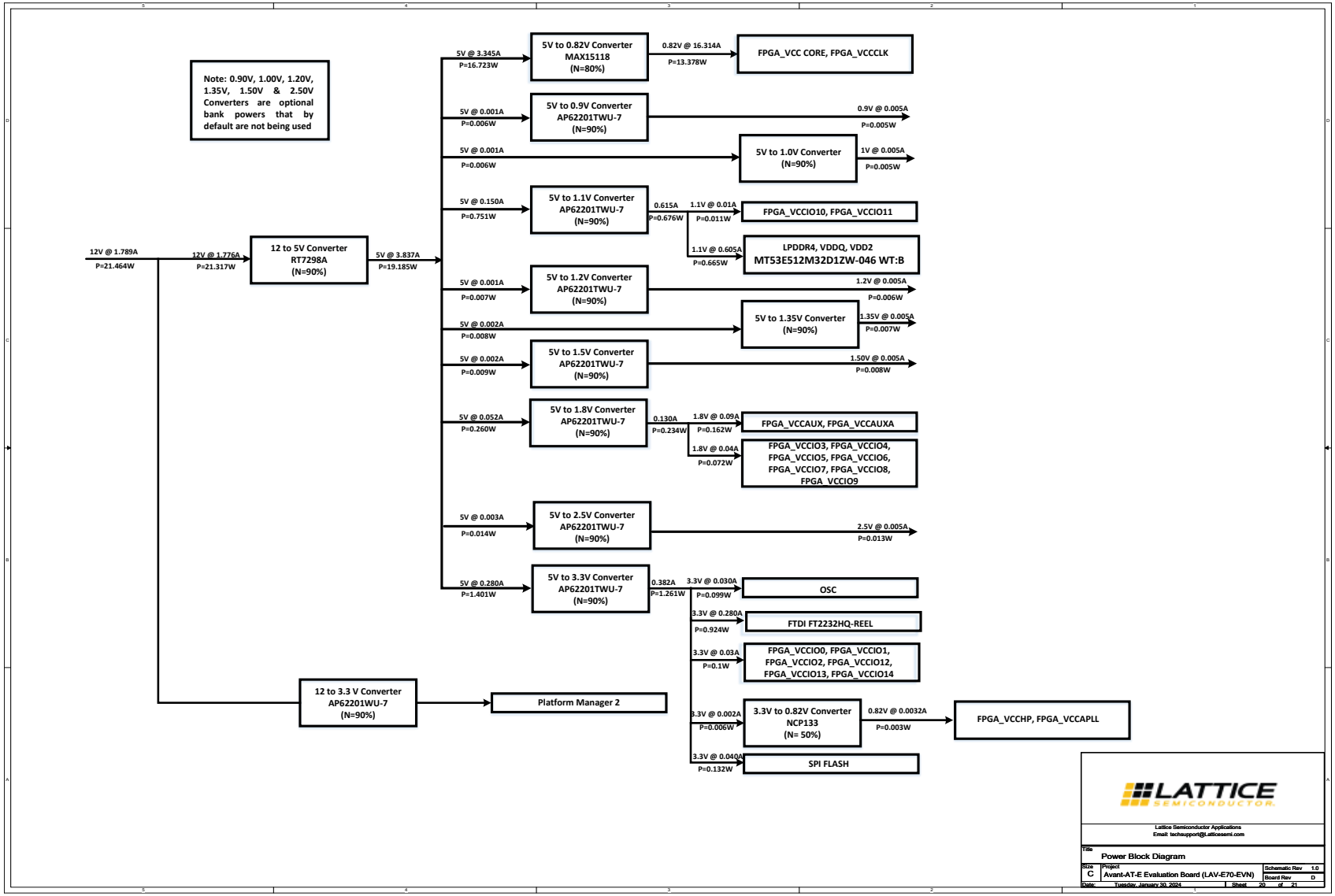

Figure A.20.Power Block Diagram

© 2023-2024 Lattice Semiconductor Corp. All Lattice trademarks, registered trademarks, patents, and disclaimers are as listed at www.latticesemi.com/legal.
All other brand or product names are trademarks or registered trademarks of their respective holders. The specifications and information herein are subject to change without notice.

Avant-AT-E Evaluation Board Revision History

Revision B

--- Initial Release

Revision C

--- Updated LPDDR4 connection to Avant FPGA

--- Added Platform Manager 2 for Avant power sequencing

--- Added 125 MHz Oscillator connected to BANK 6

--- Swapped FMC2_LA16_P/N on BANK 7

--- Swapped FMC2_HB05_P/N on BANK 8

--- Change to Switch (SW7) to control CFGMODE on BANK 2

--- Added VFMx_ADJ option to power FMC BANKs

Revision D

--- VCC_1V80 global power net is fixed on Platform Manager circuit & Regulator U36

--- Change R565 value to delay power down sequence

--- Add jumper option to disable JTAG for Platform Manager 2

--- Replaced FB15 & FB17 with 0 Ohm Resistors

--- Added J81, GND Pin

--- Added various Test Points

--- Added R588 & R589 (NPs) for U43 EN control

Lattice Semiconductor Applications
Email: techsupport@Latticesemi.com

Title	Revision History	
Size B	Project Avant-AT-E Evaluation Board (LAV-E70-EVN)	Schematic Rev 1.0 / Board Rev D
Date: Tuesday, January 30, 2024	Sheet 21 of 21	

Figure A.21.Revision History

© 2023-2024 Lattice Semiconductor Corp. All Lattice trademarks, registered trademarks, patents, and disclaimers are as listed at www.latticesemi.com/legal.
All other brand or product names are trademarks or registered trademarks of their respective holders. The specifications and information herein are subject to change without notice.

Appendix B. Avant Evaluation Board Bill of Materials

Item	Reference	Qty	Value	PCB Footprint	Comments	Part Number	Manufacturer	Description
1	VREFB1,B4_VREFA,B5_VREFB,6T,B8_VREFA, B9_VREFB,10T,VFMC1_3V30,VFMC2_3V30, WRCLK,WDAT,ST,RDAT,P_PROGN,P_JTAGENB, P_INITN,P_DONE,PTM_SDA,PTM_SCL,ASC_CLK	20	VTTVREF	TP_50	DNL	—	—	—
2	C1,C2,C3,C4,C7,C8,C10,C11,C12,C13,C16,C20, C24,C31,C32,C38,C39,C40,C42,C43,C44,C46, C48,C56,C57,C58,C65,C66,C99,C100,C142,C143 ,C144,C145,C146,C147,C148,C149,C150,C151, C152,C164,C165,C166,C167,C171,C172,C173, C174,C175,C176,C177,C178,C289,C290,C291, C292,C398,C399,C400,C401,C404,C526,C527, C529,C530,C531,C532,C533,C535,C536,C537, C538,C539,C540,C541,C542,C544,C545,C546, C548,C561,C564,C579,C580,C584,C587,C588, C589,C590,C592,C593,C594,C596,C597,C598, C599,C600,C625,C629	100	0.1uF	C0201	—	GRM033R61E104KE14J	Murata	CAP CER 0.1UF 25V 10% X5R 0201
3	C5	1	4.7uF	C0603	—	ECJ-1VB0J475K	Panasonic	CAP CER 4.7UF 6.3V 10% X5R 0603
4	C6,C9	2	4.7uF	C0603	—	ECJ-1VB0J475K	Panasonic	CAP CER 4.7UF 6.3V 10% X5R 0603
5	C14	1	10uF	C0402	—	CL05A106MP8NUB8	Samsung Electro-Mechanics	CAP CER 10UF 10V X5R 0402
6	C15,C21,C22,C26,C27,C34	6	0.1uF	C0201	—	GRM033R61E104KE14J	Murata Electronics	CAP CER 0.1UF 25V 10% X5R 0201
7	C17,C18	2	18pF	C0402	—	C0402C180K3GACTU	Kemet	CAP CER 18PF 25V 10% NP0 0402
8	C19,C33,C37,C41,C55,C64,C528,C534,C543, C547,C586,C591,C595,C614,C615,C616,C617, C618,C619	19	10uF	C0402	—	CL05A106MP8NUB8	Samsung Electro-Mechanics	CAP CER 10UF 10V X5R 0402
9	C23	1	0.1uF	C0201	—	GRM033R61E104KE14J	Murata Electronics	CAP CER 0.1UF 25V 10% X5R 0201
10	C25	1	1uF	C0603	—	TMK107B7105KA-T	Taiyo Yuden	CAP CER 1UF 25V 10% X7R 0603

© 2023-2024 Lattice Semiconductor Corp. All Lattice trademarks, registered trademarks, patents, and disclaimers are as listed at www.latticesemi.com/legal.
All other brand or product names are trademarks or registered trademarks of their respective holders. The specifications and information herein are subject to change without notice.

Item	Reference	Qty	Value	PCB Footprint	Comments	Part Number	Manufacturer	Description
11	C29,C30	2	50pF	C0603	—	06035A500JAT2A	KYOCERA AVX	CAP CER 50PF 50V NP0 0603
12	C36,C396,C397,C466,C469,C471,C474,C483, C485,C488,C510,C512,C525,C631	14	10uF	C0402	—	C1005X5R0J106M050BC	TDK Corporation	CAP CER 10UF 6.3V 20% X5R 0402
13	C45,C47,C558,C560	4	10uF	C1206	—	TMK316BJ106KL-T	Taiyo Yuden	CAP CER 10UF 25V X5R 1206
14	C49,C50,C51,C103,C104,C556,C557,C565,C622, C630,C678,C679,C680,C681	14	22uF	C0603	—	GRM188R61A226ME15D	Murata	CAP CER 22UF 10V X5R 0603
15	C52,C101,C559,C624	4	0.1nF	C0603	—	CC0603JRNPO9BN101	Yageo	CAP CER 100PF 50V C0G/NPO 0603
16	C53,C102,C562,C628	4	1uF	C0603	—	TMK107B7105KA-T	Taiyo Yuden	CAP CER 1UF 25V 10% X7R 0603
17	C54,C105,C563,C627	4	3.3nF	C0201	—	GRM033R71E332KA12D	Murata	CAP CER 3300PF 25V X7R 0201
18	C60,C61,C722,C723,C724,C725,C727,C728, C729,C1177,C1178	11	0.1uF	C0402	—	GRM155R71H104KE14J	Murata Electronics	CAP CER 0.1UF 50V X7R 0402
19	C69	1	1uF	C0603	—	TMK107B7105KA-T	Taiyo Yuden	CAP CER 1UF 25V 10% X7R 0603
20	C94	1	10 nF	C0603	—	C0603C103K3TACAUTO	KEMET	CAP CER 0603 10NF 25VDC X8G
21	C97,C98,C623,C626	4	10uF 25V 1206	C1206	—	TMK316BJ106KL-T	Taiyo Yuden	CAP CER 10UF 25V X5R 1206
22	C113	1	560 uF	RAD_CAN_A768MS	—	A768MS567M1ELAS017	KEMET	CAP ALUM POLY 560UF 20% 25V SMD
23	C138,C139,C140,C163,C168,C169,C402,C403, C405,C620,C621	11	10uF	C0402	—	C1005X5R0J106M050BC	TDK Corporation	CAP CER 10UF 6.3V 20% X5R 0402
24	C287,C288,C293,C717	4	10nF	C0402	—	GRM155R60J103KA01D	Murata Electronics	CAP CER 10000PF 6.3V X5R 0402
25	C385,C632,C634,C638,C645,C649,C653,C657, C658,C662,C674,C682,C690,C1181	14	0.1uF	cap0402	—	GRM155R71H104KE14J	Murata Electronics	CAP CER 0.1UF 50V X7R 0402
26	C386,C387,C635,C636,C639,C640,C642,C643,C646,C647,C650,C651,C654,C655,C659,C660, C663,C664,C675,C676,C1183,C1184	22	22uF	C0603	—	CL10A226MP8NUNE	Samsung Electro-Mechanics	CAP CER 22UF 10V X5R 0603
27	C388,C641,C644,C648,C652,C656,C661,C665,C666,C668,C688,C718,C719	13	10uF	cap0805	—	C2012X5R1E106M085AC	TDK Corporation	CAP CER 10UF 25V X5R 0805

© 2023-2024 Lattice Semiconductor Corp. All Lattice trademarks, registered trademarks, patents, and disclaimers are as listed at www.latticesemi.com/legal.
All other brand or product names are trademarks or registered trademarks of their respective holders. The specifications and information herein are subject to change without notice.

Item	Reference	Qty	Value	PCB Footprint	Comments	Part Number	Manufacturer	Description
28	C465,C467,C468,C470,C472,C473,C475,C476, C477,C478,C479,C480,C481,C482,C484,C486, C487,C489,C490,C491,C492,C493,C494,C495, C496,C497,C498,C499,C500,C501,C502,C503, C504,C505,C506,C507,C508,C509,C511	39	0.1uF	C0201	—	GRM033R61A104KE15D	Murata Electronics	CAP CER 0.1UF 10V X5R 0201
29	C612,C613	2	22uF	C0402	—	CM05X5R226M06AH080	KYOCERA AVX	CAP CER 22UF 6.3V X5R 0402
30	C637	1	10uF	C0603	—	EMK107BBJ106MA-T	Taiyo Yuden	CAP CER 10UF 16V X5R 0603
31	C672	1	180pF	C0402	—	04025C181KAT2A	KYOCERA AVX	CAP CER 180PF 50V X7R 0402
32	C673	1	8.2nF	C0402	—	GRM155R71E822KA01D	Murata Electronics	CAP CER 8200PF 25V X7R 0402
33	C677	1	10nF	C0402	—	CC0402KRX7R7BB103	YAGEO	CAP CER 10000PF 16V X7R 0402
34	C683	1	4.7nF	C0402	—	LMK105SD472KV-F	Taiyo Yuden	CAP CER 4700PF 10V 0402 LOW DIST
35	C684,C685,C686,C687	4	150uF	C1210	—	CL32A157MQVNNNE	Samsung Electro-Mechanics	CAP CER 150UF 6.3V X5R 1210
36	C689	1	0.47uF	C0402	—	GMC04X5R474K25NT	CAL-CHIP ELECTRONICS, INC.	CAP CER 0.47UF 25V X5R 0402
37	C711	1	22pF	C0603	—	0603YA220KAT2A	KYOCERA AVX	CAP CER 22PF 16V NP0 0603
38	C712	1	6.8nF	C0603	—	0603YC682KAT2A	KYOCERA AVX	CAP CER 6800PF 16V X7R 0603
39	C713,C714	2	22uF	C0805	—	CC0805MKX5R8BB226	Yageo	CAP CER 22UF 25V X5R 0805
40	C720,C732,C733	3	0.1uF	C0402	—	GRM155R61A104KA01J	Murata Electronics	CAP CER 0.1UF 10V X5R 0402
41	C721,C726	2	10uF	C0402	—	CL05A106MP8NUB8	Samsung Electro-Mechanics	CAP CER 10UF 10V X5R 0402
42	C734	1	0.1uF	402	**DNL**	GRM155R60J104KA01D	Murata Electronics	CAP CER 0.1UF 6.3V X5R 0402

© 2023-2024 Lattice Semiconductor Corp. All Lattice trademarks, registered trademarks, patents, and disclaimers are as listed at www.latticesemi.com/legal.
All other brand or product names are trademarks or registered trademarks of their respective holders. The specifications and information herein are subject to change without notice.

Item	Reference	Qty	Value	PCB Footprint	Comments	Part Number	Manufacturer	Description
43	C1179,C1180	2	1 nF	C0603	—	C0603C102K4RECAUTO	KEMET	CAP CER 0603 1NF 16V X7R 10%
44	C1182	1	10uF	C0603	—	C1608X5R1E106M080AC	TDK Corporation	CAP CER 10UF 25V X5R 0603
45	TP_Y1,TP_AA1,TP_AM2,TP_AL2,TP_AH2, TP_AJ3,TP_Y5,TP_AA5,TP_AA10,INIT,DONE	11	TestPoint	TP50	**DNL**	—	—	—
46	D1,D5,D6,D7,D8,D9,D10,D11,D12,D13	10	GREEN	APT1608	—	150060GS75000	Wurth Electronik	LED GREEN CLEAR 0603 SMD
47	D3	1	ESDR0502N-UDFN6	UDFN6_040	—	ESDR0502NMUTBG	onsemi	TVS DIODE 5.5VWM 6UDFN
48	D4	1	RED	LED0603	—	150060RS75000	Wurth Electronik	LED RED CLEAR 0603 SMD
49	D22,D23,D24,D25,D26,D27,D28,D29	8	RED	LED0603	—	150060RS75000	Wurth Electronik	LED RED CLEAR 0603 SMD
50	D52,D77	2	V12P10-M3/86A	TO-277A	—	V12P10-M3/86A	Vishay Semiconductor Diodes Division	DIODE SCHOTTKY 100V 12A TO277A
51	D60	1	LDT-N2804RI	display_12P-PTH	—	LDT-N2804RI	Lumex Opto/Components Inc.	DISPLAY 7SEG 0.28" TRP RED 12DIP
52	D61	1	1V00	led_0603	—	SML-D12M8WT86	Rohm Semiconductor	LED GREEN DIFFUSED 0603 SMD
53	D62	1	3V30	led_0603	—	SML-D12M8WT86	Rohm Semiconductor	LED GREEN DIFFUSED 0603 SMD
54	D63	1	1V10	led_0603	—	SML-D12M8WT86	Rohm Semiconductor	LED GREEN DIFFUSED 0603 SMD
55	D64	1	1V80	led_0603	—	SML-D12M8WT86	Rohm Semiconductor	LED GREEN DIFFUSED 0603 SMD
56	D65	1	1V20	led_0603	—	SML-D12M8WT86	Rohm Semiconductor	LED GREEN DIFFUSED 0603 SMD
57	D66	1	2V50	led_0603	—	SML-D12M8WT86	Rohm Semiconductor	LED GREEN DIFFUSED 0603 SMD
58	D67	1	1V50	led_0603	—	SML-D12M8WT86	Rohm Semiconductor	LED GREEN DIFFUSED 0603 SMD
59	D68	1	0V90	led_0603	—	SML-D12M8WT86	Rohm Semiconductor	LED GREEN DIFFUSED 0603 SMD

© 2023-2024 Lattice Semiconductor Corp. All Lattice trademarks, registered trademarks, patents, and disclaimers are as listed at www.latticesemi.com/legal.
All other brand or product names are trademarks or registered trademarks of their respective holders. The specifications and information herein are subject to change without notice.

Item	Reference	Qty	Value	PCB Footprint	Comments	Part Number	Manufacturer	Description
60	D69	1	1V35	led_0603	—	SML-D12M8WT86	Rohm Semiconductor	LED GREEN DIFFUSED 0603 SMD
61	D70	1	0V82	led_0603	—	SML-D12M8WT86	Rohm Semiconductor	LED GREEN DIFFUSED 0603 SMD
62	D73	1	5V00	led_0603	—	SML-D12M8WT86	Rohm Semiconductor	LED GREEN DIFFUSED 0603 SMD
63	D74	1	12V00	led_0603	—	SML-D12M8WT86	Rohm Semiconductor	LED GREEN DIFFUSED 0603 SMD
64	D75	1	PLL_0V82	led_0603	—	SML-D12M8WT86	Rohm Semiconductor	LED GREEN DIFFUSED 0603 SMD
65	D78	1	SBY_3V30	led_0603	—	SML-D12M8WT86	Rohm Semiconductor	LED GREEN DIFFUSED 0603 SMD
66	FB1,FB2,FB3,FB6,FB16	5	MPZ1005S 121CT000	FB0402	—	MPZ1005S121CT000	TDK Corporation	FERRITE BEAD 120 OHM 0402 1LN
67	FB4,FB24	2	FBMH2016 HM121NT	806	—	FBMH2016HM121NT	Taiyo Yuden	FERRITE BEAD 120 OHM 0806 1LN
68	FB22,FB25,FB26,FB27	4	BLM15AX6 01SN1D	402	—	BLM15AX601SN1D	Murata Electronics	FERRITE BEAD 600 OHM 0402 1LN
69	F1_ADJ,1V,F2_ADJ,GPIO5_TP,5V,GND6,GND7, GND8,GND9,0V9,TP_AP10,GND10,TP_AP11,GND11,1V1,TP_AP12,TP_AN12,TP_AK12,GND12,1V2,12V,TP_AP13,TP_AN13,TP_AM13,TP_AL13, TP_AK13,GND13,TP_AK14,TP_AH14,TP_AG14, GND14,TP_AK15,TP_AH15,TP_AG15,TP_AF15, GND15,1V5,TP_AK16,TP_AJ16,TP_AF16,1V8,2V5,3V3,PLL0V82_EN,0V82_EN,0V82,U107_EN,F1_3V3AUX,F1_3V3,1V35,1V80_EN,F2_3V3AUX, F2_3V3,SB_3V30	54	T POINT R	TP	**DNL**	—	—	—
70	F2	1	ASMDC300 F/24-2	SMTFUSE	—	ASMDC300F/24-2	Littelfuse Inc	PTC RESET FUSE 24V 3A 2SMD
71	GND1,GND2,GND3,GND4,GND5	5	TestPoint_ Hole	TP	**DNL**	—	—	Square test point, 40mil inner diameter, 63mil outer diameter
72	JP1,JP2,JP3,JP4,JP5,JP6,JP7,JP8,JP17,JP43,JP44, JP45,JP46	13	JUMPER	Header_1x 2	**Regular 100mil Header**	—	—	—

© 2023-2024 Lattice Semiconductor Corp. All Lattice trademarks, registered trademarks, patents, and disclaimers are as listed at www.latticesemi.com/legal.
All other brand or product names are trademarks or registered trademarks of their respective holders. The specifications and information herein are subject to change without notice.

Item	Reference	Qty	Value	PCB Footprint	Comments	Part Number	Manufacturer	Description
73	JP12,JP13	2	JUMPER-DNI	Header_1x2	**DNL/Regular 100mil Header**	—	—	—
74	JP15	1	JUMPER	Header_1x2	**Regular 100mil Header**	—	—	—
75	JP26	1	Receptacle 20X2-DNI	HDR254-2X20_socket	**DNL**	—	—	—
76	JP28	1	3-PIN	HDR254M-1X3	**Default : Pin 2 & 3**	PEC03SAAN	Sullins Connector Solutions	CONN HEADER VERT 3POS 2.54MM
77	JP65	1	3-PIN	HDR254M-1X3	**Default : Pin 1 & 2**	PEC03SAAN	Sullins Connector Solutions	CONN HEADER VERT 3POS 2.54MM
78	JP64	1	3-PIN	HDR254M-1X3	—	PEC03SAAN	Sullins Connector Solutions	CONN HEADER VERT 3POS 2.54MM
79	JP31,JP32,JP33,JP34,JP35,JP37,JP38,JP39,JP40,JP41,JP42,JP47,JP48,JP49,JP51,JP52,JP58,JP59,JP60,JP61,JP62,JP63,JP66,JP70,JP72,JP74,JP76,JP78,JP80	29	J-2 Pin Jumper	0p1_2-Pin_TH	—	0022284020	Molex	CONN HEADER VERT 2POS 2.54MM
80	JP36,JP50,JP69,JP71,JP73,JP75,JP77,JP79	8	J-2 Pin Jumper	0p1_2-Pin_TH	**Default : Pin 1 & 2**	0022284020	Molex	CONN HEADER VERT 2POS 2.54MM
81	J1	1	Header 1x8	hdr_amp_87220_8_1x8_100	—	0022284081	Molex	CONN HEADER VERT 8POS 2.54MM
82	J2	1	USB_MINI_B	USB_MINI_B-1734035-2	—	1734035-2	TE Connectivity AMP Connectors	CONN RCPT USB2.0 MINI B SMD R/A
83	J3,J10,J53	3	Header_2x7	Header_2x7	**Regular 100mil Header**	—	—	—
84	J6,J7	2	PMOD 2x6	PPPC062LJBN-RC	-	PPPC062LJBN-RC	Sullins	CONN HDR 12POS 0.1 GOLD PCB R/A
85	J8	1	CON3	HDR1X3	**Default : Pin 2 & 3**	PEC03SAAN	Sullins Connector Solutions	CONN HEADER VERT 3POS 2.54MM

© 2023-2024 Lattice Semiconductor Corp. All Lattice trademarks, registered trademarks, patents, and disclaimers are as listed at www.latticesemi.com/legal.
All other brand or product names are trademarks or registered trademarks of their respective holders. The specifications and information herein are subject to change without notice.

Item	Reference	Qty	Value	PCB Footprint	Comments	Part Number	Manufacturer	Description
86	J11	1	HEADER 2	22284024	—	22284024	Molex	CONN HEADER VERT 2POS 2.54MM
87	J23,J57	2	Header_2x1	Header_2x1	**Regular 100mil Header**	—	—	—
88	J31,J32,J33,J81	4	GND	TUR_TH	—	1573-2	Keystone Electronics	TERM TURRET SINGLE L=4.72MM TIN
89	J39	1	PTM_JTAG	hdr_amp_87220_8_1x8_100	—	22284081	Molex	CONN HEADER 8POS .100 VERT TIN
90	J48,J54	2	ASP-134486-01	ASP-134486-01	—	ASP-134486-01	Samtec Inc.	CONN ARRAY RCPT 400POS SMD GOLD
91	J50	1	694106301002	694106301002	—	694106301002	Würth Elektronik	CONN PWR JACK 2.1X5.5MM SOLDER
92	J58,J59,J60,J61,J62,J63,J64,J65,J66,J67,J68,J69,J70,J71,J72,J73,J74,J75,J76,J77,J78,J79,J80	23	J-Header_2x1	Header_2X1_100MIL	**Regular 100mil Header**	—	—	—
93	L1,L10,L13,L14	4	2.2uH SPM6530T-2R2M	SPM6530T-2R2M	—	SPM6530T-2R2M	TDK Corporation	FIXED IND 2.2UH 8.2A 19 MOHM SMD
94	L3,L6	2	600ohm 500mA	fb0603	—	BLM18AG601SN1D	Murata Electronics	FERRITE BEAD 600 OHM 0603 1LN
95	L4,L5,L17,L23	4	3.3uH	SRP4020TA-3R3M	—	SRP4020TA-3R3M	Bourns Inc.	FIXED IND 3.3UH 3.5A 76 MOHM SMD
96	L8,L15	2	1.5uH	SRP4020TA-1R5M	—	SRP4020TA-1R5M	Bourns Inc.	FIXED IND 1.5UH 4.5A 42 MOHM SMD
97	L16,L18,L20	3	2.2uH	SRP4020TA-2R2M	—	SRP4020TA-2R2M	Bourns Inc.	FIXED IND 2.2UH 4A 61 MOHM SMD
98	L19	1	1uH	SMD	—	SRP4020TA-1R0M	Bourns Inc.	FIXED IND 1UH 5A 27 MOHM SMD
99	L21	1	4.7uH	8mmx8mm	—	NR8040T4R7N	Taiyo Yuden	FIXED IND 4.7UH 4.1A 23.4MOHM SM
100	L22	1	0.15uH	SMD	—	SRP5020C-R15Y	Bourns Inc.	FIXED IND 150NH 18A 4 MOHM SMD

© 2023-2024 Lattice Semiconductor Corp. All Lattice trademarks, registered trademarks, patents, and disclaimers are as listed at www.latticesemi.com/legal.
All other brand or product names are trademarks or registered trademarks of their respective holders. The specifications and information herein are subject to change without notice.

Item	Reference	Qty	Value	PCB Footprint	Comments	Part Number	Manufacturer	Description
101	VFMC1_ADJ,VCCIO1,PB1,VFMC2_ADJ,VCCIO2, PB2,VCCIO3,PB3,VCCIO4,VCCAPLL4,VCCIO5, VCCIO6,VCCIO7,VCCAPLL7,VCCIO8,VCCIO9, VCCIO10,VCCAPLL10,VCCIO11,VCCIO12, VCCIO13,VCCIO14,U42_PG,VCCORE,VCCIO0, VCCHP,VCCCLK,VCCAUX,VCCAPLLW,PS_EN, PROGRAMN	31	TestPoint_ SMT	TPC32	**DNL**	—	—	—
102	Q1	1	MMBT2222 ALT1G	MMBT2222 ALT-1	—	MMBT2222ALT1G	onsemi	TRANS NPN 40V 0.6A SOT23-3
103	Q2,Q3,Q4,Q7,Q8,Q9,Q10,Q11,Q12,Q13,Q14, Q15,Q16,Q17,Q18,Q19,Q20,Q21,Q22,Q23,Q24	21	BC817-40-TP	SOT23-3	—	BC817-40-TP	Micro Commercial Co	TRANS NPN 45V 0.8A SOT-23
104	Q26	1	MGSF1N02 LT1G	SOT23_MG SF1N02L	**Alternate Part # MVGSF1N02L T1G**	MGSF1N02LT1G	onsemi	MOSFET N-CH 20V 750MA SOT23-3
105	R1,R19	2	2.2K	R0603	—	RC0603FR-072K2L	Yageo	RES SMD 2.2K OHM 1% 1/10W 0603
106	R2,R3,R4,R21,R27,R30,R31,R32,R33,R34,R35, R36,R37,R42,R47,R48,R76,R78,R79	19	4.7K	R0603	—	CRCW06034K70FKEA	Vishay	RES 4.70K OHM 1/10W 1% 0603 SMD
107	R5,R11,R77,R92,R317	5	2.2K	R0603	—	CRCW06032K20FKEA	Vishay	RES SMD 2.2K OHM 1% 1/10W 0603
108	R6	1	22	R0402	—	ERJ-2RKF22R0X	Panasonic Electronic Components	RES SMD 22 OHM 1% 1/10W 0402
109	R7,R8,R9	3	0	R0402	—	RC0402FR-070RL	Yageo	RES 0 OHM JUMPER 1/16W 0402
110	R10	1	0-DNI	R0402	**DNL**	RC0402FR-070RL	Yageo	RES 0 OHM JUMPER 1/16W 0402
111	R12,R13,R14	3	10K	R0603	—	RMCF0603JT10K0	Stackpole Electronics Inc	RES 10K OHM 1/10W 5% 0603
112	R15	1	12K	R0603	—	RC0603FR-0712KL	Yageo	RES 12K OHM 1/10W 1% 0603 SMD
113	R16,R17	2	10K	R0603	—	RMCF0603JT10K0	Stackpole Electronics Inc	RES 10K OHM 1/10W 5% 0603
114	R20,R408	2	0	R0402	—	RC0402FR-070RL	Yageo	RES 0 OHM JUMPER 1/16W 0402

© 2023-2024 Lattice Semiconductor Corp. All Lattice trademarks, registered trademarks, patents, and disclaimers are as listed at www.latticesemi.com/legal.
All other brand or product names are trademarks or registered trademarks of their respective holders. The specifications and information herein are subject to change without notice.

Item	Reference	Qty	Value	PCB Footprint	Comments	Part Number	Manufacturer	Description
115	R22,R26,R28	3	10k	R0603	—	RC0603FR-0710KL	Yageo	RES SMD 10K OHM 1% 1/10W 0603
116	R23,R29,R50,R51,R80	5	100	R0402	—	ERJ-2RKF1000X	Pansonic	RES SMD 100 OHM 1% 1/10W 0402
117	R24,R25,R56,R57,R58,R59,R60,R61,R62,R63	10	1K	R0603	—	RC0603FR-071KL	Yageo	RES 1K OHM 1/10W 1% 0603 SMD
118	R38,R477	2	10K	R0402	—	CRCW040210K0JNED	Vishay Dale	RES SMD 10K OHM 5% 1/16W 0402
119	R39,R40,R41	3	10K_NP	402	**DNL**	ERJ-2GEJ103X	Panasonic Electronic Components	RES SMD 10K OHM 5% 1/10W 0402
120	R43,R44,R45,R46,R536	5	0	R0402	—	ERJ-2GE0R00X	Panasonic	RES SMD 0.0OHM JUMPER 1/10W 0402
121	R55,R345	2	22	R0402	—	ERJ-2RKF22R0X	Panasonic Electronic Components	RES SMD 22 OHM 1% 1/10W 0402
122	R81	1	10K	R0603	—	RC0603FR-0710KL	Yageo	RES SMD 10K OHM 1% 1/10W 0603
123	R82,R298	2	0.01	R0402	—	PE0402FRF070R01L	Yageo	RES 0.01 OHM 1% 1/16W 0402
124	R83,R84,R217,R310,R327,R328	6	10k	R0603	—	RMCF0603JT10K0	Stackpole Electronics Inc	RES 10K OHM 1/10W 5% 0603
125	R85,R86,R87,R91,R314,R315,R316,R322,R543	9	4.7k	R0603	—	RC0603FR-074K7L	Yageo	RES 4.7K OHM 1% 1/10W 0603
126	R90,R321,R542	3	4.7k	R0603	—	RC0603FR-074K7L	Yageo	RES 4.7K OHM 1% 1/10W 0603
127	R95,R251,R252,R307,R325,R326	6	1k	R0603	—	RC0603FR-071KL	Yageo	RES 1K OHM 1/10W 1% 0603 SMD
128	R96,R305	2	1K	402	—	RC0402FR-071KL	Yageo	RES 1K OHM 1% 1/16W 0402
129	R100,R306	2	301R	402	—	RC0402FR-07301RL	Yageo	RES 301 OHM 1% 1/16W 0402
130	R103,R104	2	0-DNI	R0603	**DNL**	RC0603JR-070RL	Yageo	RES 0.0 OHM 1/10W JUMP 0603 SMD
131	R105,R107,R108	3	0-DNI	R0402	**DNL**	ERJ-2GE0R00X	Panasonic Electronic Components	RES SMD 0 OHM JUMPER 1/10W 0402

© 2023-2024 Lattice Semiconductor Corp. All Lattice trademarks, registered trademarks, patents, and disclaimers are as listed at www.latticesemi.com/legal.
All other brand or product names are trademarks or registered trademarks of their respective holders. The specifications and information herein are subject to change without notice.

Item	Reference	Qty	Value	PCB Footprint	Comments	Part Number	Manufacturer	Description
132	R106	1	22-DNI	R0402	**DNL**	ERJ-2RKF22R0X	Panasonic Electronic Components	RES SMD 22 OHM 1% 1/10W 0402
133	R109	1	10K	R0603	—	RC0603FR-0710KL	Yageo	RES SMD 10K OHM 1% 1/10W 0603
134	R110	1	22	R0402	—	ERJ-2RKF22R0X	Panasonic Electronic Components	RES SMD 22 OHM 1% 1/10W 0402
135	R111,R404	2	750 1%	R0402	—	ERJ-2RKF7500X	Panasonic Electronic Components	RES SMD 750 OHM 1% 1/10W 0402
136	R112,R403	2	422 1%	R0402	—	ERJ-2RKF4220X	Panasonic Electronic Components	RES SMD 422 OHM 1% 1/10W 0402
137	R126,R127	2	2k2	R0603	—	CRCW06032K20FKEA C	Vishay Dale	RES 2.2K OHM 1% 1/10W 0603
138	R137,R139,R140,R142,R143,R147,R153,R353, R370,R374,R378,R382,R385,R387,R391,R395	16	0.01	R0603	—	PF0603FRE7T0R01Z	Yageo	RES 0.01 OHM 1% 0.3W 0603
139	R152	1	0.001	R1206	—	PMR18EZPFV1L00	Rohm Semiconductor	1 mOhms ±1% 1W Chip Resistor 1206
140	R154	1	0.1	603	—	RCWE0603R100FNEA	Vishay Dale	RES 0.1 OHM 1% 1/5W 0603
141	R155,R267,R539,R540,R541	5	1R	603	—	ERJ-3BQF1R0V	Panasonic Electronic Components	RES SMD 1 OHM 1% 1/4W 0603
142	R169,R339,R341,R343,R411,R417,R427,R433, R439,R444,R447,R453,R475,R521,R523,R524, R526,R528,R529,R532,R533,R546,R567	23	330R	res0603	—	ERJ-3EKF3300V	Panasonic Electronic Components	RES SMD 330 OHM 1% 1/10W 0603
143	R171,R407	2	1.0k	R0402	—	RC0402FR-071KL	Yageo	RES 1K OHM 1% 1/16W 0402
144	R179,R180,R398	3	10k	R0402	—	RC0402FR-0710KL	Yageo	RES SMD 10K OHM 1% 1/16W 0402
145	R215,R216,R308,R309	4	0-DNI	R0603	**DNL**	RC0603JR-070RL	Yageo	RES 0 OHM JUMPER 1/10W 0603
146	R229,R416,R426,R432,R438,R443,R446,R452, R474,R520,R522,R525,R527,R530,R531,R534, R535,R547	18	10K	res0603	—	RC1608F103CS	Samsung Electro-Mechanics	RES SMD 10K OHM 1% 1/10W 0603

© 2023-2024 Lattice Semiconductor Corp. All Lattice trademarks, registered trademarks, patents, and disclaimers are as listed at www.latticesemi.com/legal.
All other brand or product names are trademarks or registered trademarks of their respective holders. The specifications and information herein are subject to change without notice.

Item	Reference	Qty	Value	PCB Footprint	Comments	Part Number	Manufacturer	Description
147	R231	1	2.61K	603	—	RC0603FR-072K61L	Yageo	RES 2.61K OHM 1% 1/10W 0603
148	R232,R415,R421,R424,R430,R436,R442,R451, R457,R569	10	10K	603	—	RC0603FR-0710KL	Yageo	RES SMD 10K OHM 1% 1/10W 0603
149	R233,R412,R418,R428,R434,R441,R448,R454	8	18.2 k	res0402	—	RT0402BRD0718K2L	YAGEO	RES SMD 18.2KOHM 0.1% 1/16W 0402
150	R234,R413,R419,R429,R435,R440,R449,R455	8	12.7 k	res0402	—	ERJ-2RKF1272X	Panasonic Electronic Components	RES SMD 12.7K OHM 1% 1/10W 0402
151	R245	1	DNI	R0402	**DNL**	ERJ-2GE0R00X	Panasonic Electronic Components	RES SMD 0 OHM JUMPER 1/10W 0402
152	R249,R250,R323,R324	4	4.7k-DNI	R0603	**DNL**	ERJ-U03F4701V	Panasonic Electronic Components	RES 4.7K OHM 1% 1/10W 0603 SMD
153	R287,R288	2	19.1K	603	—	RC0603FR-0719K1L	Yageo	RES 19.1K OHM 1% 1/10W 0603
154	R289	1	1k4	R0603	—	RC0603FR-071K4L	Yageo	RES 1.4K OHM 1% 1/10W 0603
155	R290,R294	2	240	R0201	—	RC0201FR-07240RL	Yageo	RES 240 OHM 1% 1/20W 0201
156	R291	1	240	R0402	—	RC0402JR-07240RL	Yageo	Resistor 5% 240ohm 1/16W 0402
157	R292,R293	2	4.7k	R0402	—	RC0402FR-074K7L	Yageo	RES SMD 4.7K OHM 1% 1/16W 0402
158	R331,R332,R333,R334,R335,R336,R337,R338	8	53.6R	res0402	—	RC0402FR-0753R6L	Yageo	RES SMD 53.6 OHM 1% 1/16W 0402
159	R340,R342,R344	3	4.7K	res0603	—	RC0603JR-074K7L	Yageo	RES SMD 4.7K OHM 5% 1/10W 0603
160	R399,R402	2	1.00k 1%	R0402	—	ERJ-U02F1001X	Panasonic Electronic Components	RES 1K OHM 1% 1/10W 0402 SMD
161	R400,R405	2	2.55k 1%	R0402	—	RK73H1ETTP2551F	KOA Speer Electronics, Inc.	RES 2.55K OHM 1% 1/10W 0402
162	R401,R406	2	1.02k 1%	R0402	—	RK73H1ETTP1021F	KOA Speer Electronics, Inc.	RES 1.02K OHM 1% 1/10W 0402

© 2023-2024 Lattice Semiconductor Corp. All Lattice trademarks, registered trademarks, patents, and disclaimers are as listed at www.latticesemi.com/legal.
All other brand or product names are trademarks or registered trademarks of their respective holders. The specifications and information herein are subject to change without notice.

Item	Reference	Qty	Value	PCB Footprint	Comments	Part Number	Manufacturer	Description
163	R414,R566	2	31.6K	603	—	RC0603FR-0731K6L	Yageo	RES 31.6K OHM 1% 1/10W 0603
164	R420	1	3.83K	603	—	RC0603FR-073K83L	Yageo	RES 3.83K OHM 1% 1/10W 0603
165	R425	1	12.7K	603	—	RC0603FR-0712K7L	Yageo	RES 12.7K OHM 1% 1/10W 0603
166	R431	1	5.11K	603	—	RC0603FR-135K11L	Yageo	RES 5.11K OHM 1% 1/10W 0603
167	R437	1	21.5K	603	—	RC0603FR-0721K5L	Yageo	RES 21.5K OHM 1% 1/10W 0603
168	R445	1	8.87K	603	—	RC0603FR-078K87L	Yageo	RES 8.87K OHM 1% 1/10W 0603
169	R450	1	1.33K	603	—	RC0603FR-071K33L	Yageo	RES 1.33K OHM 1% 1/10W 0603
170	R456	1	6.98K	603	—	RC0603FR-076K98L	Yageo	RES 6.98K OHM 1% 1/10W 0603
171	R460,R461,R462	3	240	R0402	—	RC0402JR-07240RL	Yageo	RES 240 OHM 5% 1/16W 0402
172	R463	1	4.3K	603	—	RC0603FR-074K3L	Yageo	RES 4.3K OHM 1% 1/10W 0603
173	R464	1	176K	603	—	RT0603DRE07176KL	Yageo	RES SMD 176K OHM 0.5% 1/10W 0603
174	R465	1	24K	603	—	RC0603FR-0724KL	Yageo	RES 24K OHM 1% 1/10W 0603
175	R466,R467	2	100K	603	—	RC0603FR-07100KL	Yageo	RES 100K OHM 1% 1/10W 0603
176	R468	1	10	603	—	RC0603FR-0710RL	Yageo	RES 10 OHM 1% 1/10W 0603
177	R469	1	1.78K	603	—	RC0603FR-071K78L	Yageo	RES SMD 1.78K OHM 1% 1/10W 0603
178	R470	1	4.87K	603	—	RC0603FR-074K87L	Yageo	RES 4.87K OHM 1% 1/10W 0603
179	R471	1	1	603	—	RC0603FR-071RL	Yageo	RES 1 OHM 1% 1/10W 0603
180	R472	1	4.7	603	—	RC0603JR-074R7L	Yageo	RES 4.7 OHM 5% 1/10W 0603

© 2023-2024 Lattice Semiconductor Corp. All Lattice trademarks, registered trademarks, patents, and disclaimers are as listed at www.latticesemi.com/legal.
All other brand or product names are trademarks or registered trademarks of their respective holders. The specifications and information herein are subject to change without notice.

Item	Reference	Qty	Value	PCB Footprint	Comments	Part Number	Manufacturer	Description
181	R473	1	470R	402	—	RC0402FR-07470RL	Yageo	RES 470 OHM 1% 1/16W 0402
182	R489	1	2.94K	603	—	RC0603FR-072K94L	Yageo	RES 2.94K OHM 1% 1/10W 0603
183	R490,R491	2	49.9R	R0201	—	RC0201FR-0749R9L	Yageo	RES 49.9 OHM 1% 1/20W 0201
184	R492,R493	2	NP	R0201	**DNL**	CRCW02010000Z0ED	Vishay Dale	RES SMD 0 OHM JUMPER 1/20W 0201
185	R510	1	1K	R0402	—	CRCW04021K00JNED	Vishay Dale	RES 1.0K OHM 1/16W 5% 0402 SMD
186	R519	1	3.7K	R0402	**Used 3.6K**	RC0402JR-073K6L	YAGEO	RES 3.6K OHM 5% 1/16W 0402
187	R537,R538,R548	3	0R	R0201	—	CRCW02010000Z0ED	Vishay Dale	RES SMD 0 OHM JUMPER 1/20W 0201
188	R544	1	2K	603	—	RC0603FR-072KL	Yageo	RES 2K OHM 1% 1/10W 0603
189	R545	1	80.6K	603	—	RC0603FR-0780K6L	Yageo	RES 80.6K OHM 1% 1/10W 0603
190	R549,R550,R551,R552	4	22	R0603	—	RC0603JR-0722RL	Yageo	RES 22 OHM 5% 1/10W 0603
191	R554	1	1k	R0603	—	RC0603FR-071KL	Yageo	RES 1K OHM 1% 1/10W 0603
192	R556	1	10K	603	—	RC0603FR-0710KL	Yageo	RES SMD 10K OHM 1% 1/10W 0603
193	R561,R562	2	5.9K	603	—	RC0603FR-075K9L	Yageo	RES 5.9K OHM 1% 1/10W 0603
194	R563,R564	2	3.4K	603	—	RC0603FR-073K4L	Yageo	RES 3.4K OHM 1% 1/10W 0603
195	R565	1	5.62K	603	—	RC0603FR-075K62L	Yageo	RES 5.62K OHM 1% 1/10W 0603
196	R568	1	3K	402	**Used 3.01K**	RC0402FR-073K01L	Yageo	RES 3.01K OHM 1% 1/16W 0402
197	R572	1	10K	R0402	—	CRCW040210K0JNED	Vishay Dale	RES SMD 10K OHM 5% 1/16W 0402
198	R575,R576,R577,R583,R584	5	0R	R0402	—	ERJ-2GE0R00X	Panasonic	Resistor 5% 1/10W 0ohm

© 2023-2024 Lattice Semiconductor Corp. All Lattice trademarks, registered trademarks, patents, and disclaimers are as listed at www.latticesemi.com/legal.
All other brand or product names are trademarks or registered trademarks of their respective holders. The specifications and information herein are subject to change without notice.

Item	Reference	Qty	Value	PCB Footprint	Comments	Part Number	Manufacturer	Description
199	R578	1	33R	603	—	RC0603JR-0733RL	Yageo	RES 33 OHM 5% 1/10W 0603
200	R579	1	330R	402	—	RC0402JR-07330RL	Yageo	Resistor 5% 1/16W 330ohm 0402 SMT
201	R580	1	10K	603	—	RC0603FR-0710KL	Yageo	RES SMD 10K OHM 1% 1/10W 0603
202	R581,R582	2	100	402	—	RC0402FR-7W100RL	Yageo	RES 100 OHM 1% 1/8W 0402
203	R585	1	1k	R0402	—	RC0402FR-071KL	Yageo	RES SMD 1K OHM 1% 1/16W 0402
204	R586	1	0R	402	—	RC0402JR-070RL	Yageo	RES 0 OHM JUMPER 1/16W 0402
205	R587	1	0R	1206	—	RC1206FR-070RL	Yageo	RES 0 OHM JUMPER 1/4W 1206
206	R588,R589	2	NP	603	**DNL**	RC0603JR-070RL	Yageo	RES 0 OHM JUMPER 1/10W 0603
207	SW1,SW2,SW4,SW5,SW8	5	430182043816	430182043816	—	430182043816	Würth Elektronik	SWITCH TACTILE SPST-NO 0.05A 12V
208	SW3	1	TDA DIP-8	TDA08H0SB1	—	TDA08H0SB1	C&K	SWITCH SLIDE DIP SPST 25MA 24V
209	SW6	1	SPST	SWR	—	PRK22J5DBBNN	ZF Electronics	SWITCH ROCKER SPST 6A 125V
210	SW7	1	SW-Wurth_452403012014	4.52403E+11	—	452403012014	Würth Elektronik	SWITCH SLIDE DPDT 300MA 6V
211	U1	1	FT2232HL	tqfp64_0p5_12p2x12p2_h1p6	**Customer Supplied**	FT2232HL	FTDI	IC USB HS DUAL UART/FIFO 64-LQFP
212	U2	1	93LC56C-I/SN	so8_50_244	—	93LC56C-I/SN	Microchip	IC EEPROM 2KBIT 3MHZ 8SOIC
213	U3	1	LAV-AT-500-E_1156	LAV-AT-500-L_1156	**Customer Supplied**	—	—	—
214	U4	1	W25Q512JVEIM	8-WSON	—	W25Q512JVEIM	Winbond Electronics	IC FLASH 512MBIT SPI/QUAD 8WSON

© 2023-2024 Lattice Semiconductor Corp. All Lattice trademarks, registered trademarks, patents, and disclaimers are as listed at www.latticesemi.com/legal.
All other brand or product names are trademarks or registered trademarks of their respective holders. The specifications and information herein are subject to change without notice.

Item	Reference	Qty	Value	PCB Footprint	Comments	Part Number	Manufacturer	Description
215	U5	1	MT53E512M32D1ZW-046 WT:B	BGA_SDRAM_200	**used PN from 305-PD-22-0022**	MT53E512M32D1NP-046	Micron Technology Inc.	IC MEMORY DRAM 16G 512MX32 FBGA
216	U6,U10,U31,U32	4	BD9D321EFJ	HTSOP_8_BD9D321	**Customer Supplied**	BD9D321EFJ-E2	Rohm Semiconductor	IC REG BUCK ADJ 3A 8HTSOP-J
217	U17,U34,U35,U36,U37,U38,U39,U40,U41,U107	10	AP62201WU-7	TSOT26_AP62201WU-7	—	AP62201WU-7	Diodes Incorporated	DCDC CONV HV BUCK TSOT26 T&R 3K
218	U42	1	MAX15118EWIT	BGA28N50P4X7_206X352X69N	—	MAX15118EWI+T	Analog Devices Inc./Maxim Integrated	IC REG BUCK ADJUSTABLE 18A 28WLP
219	U43	1	RT7298AHGQW	14-WQFN	—	RT7298AHGQW	Richtek USA Inc.	IC REG BUCK ADJUSTABLE 6A 14WQFN
220	U44	1	NCP133	XFDFN6	—	NCP133AMXADJTCG	Onsemi	IC REG LIN POS ADJ 500MA 6XDFN
221	U45	1	LPTM21L-CAG100	LPTM21L-CAG100	**Customer Supplied**	—	—	—
222	U46	1	PI4ULS3V204ZBEX	TQFN-14	—	PI4ULS3V204ZBEX	Diodes Incorporated	IC TRANSLTR BIDIRECTIONAL 14TQFN
223	X1	1	SXT32418BB16-12.000M	xtal_4p_SXT32418BB16_12000M	—	SXT32418BB16-12.000MT	Suntsu Electronics, Inc.	CRYSTAL 12MHZ 18PF SMD
224	X3	1	LVCMOS_CLOCK	SIT8009AC-31-18E-125_000MHZ	—	SIT8009AC-31-18E-125.000000	SiTime	MEMS OSC XO 125.0000MHZ LVCMOS
225	Y1	1	100 MHz	SMD6_AX3HAF1	—	AX3HAF1-100.0000	Abracon	Oscillators 153fs 100.00MHZ HCSL XO

© 2023-2024 Lattice Semiconductor Corp. All Lattice trademarks, registered trademarks, patents, and disclaimers are as listed at www.latticesemi.com/legal.
All other brand or product names are trademarks or registered trademarks of their respective holders. The specifications and information herein are subject to change without notice.

Item	Reference	Qty	Value	PCB Footprint	Comments	Part Number	Manufacturer	Description
226	Shunt for Headers	83	—	—	Load the shunts mentioned in the BoM & The remaining are Bag & tag	SNT-100-BK-T	Samtec Inc.	2 (1 x 2) Position Shunt Connector Black Open Top 0.100" (2.54mm) Tin
227	Avant-AT-E Evaluation Board RevD PCB	1	—	—	—	305-PD-23-0976	Pactron	—

© 2023-2024 Lattice Semiconductor Corp. All Lattice trademarks, registered trademarks, patents, and disclaimers are as listed at www.latticesemi.com/legal.
All other brand or product names are trademarks or registered trademarks of their respective holders. The specifications and information herein are subject to change without notice.

Appendix C. Known Limitations

Ball W2 needs to be tied to GND. This results in RASP_IO16 on JP26 not being available.

© 2023-2024 Lattice Semiconductor Corp. All Lattice trademarks, registered trademarks, patents, and disclaimers are as listed at www.latticesemi.com/legal.
All other brand or product names are trademarks or registered trademarks of their respective holders. The specifications and information herein are subject to change without notice.

References

- Avant-E web page
- Platform Manager 2 and L-ASC10 web page
- Programming Cables User Guide (FPGA-UG-02042)
- Lattice Avant sysCONFIG User Guide (FPGA-TN-02299)
- Lattice Avant Platform Data Sheet – Overview (FPGA-DS-02107)
- Lattice Avant Platform Data Sheet – Specifications (FPGA-DS-02112)
- Development Kits & Boards for Avant-E
- IP and Reference Designs for Avant-E
- Lattice Diamond FPGA design software
- Lattice Radiant FPGA design software
- Lattice Insights for Lattice Semiconductor training courses and learning plans.

© 2023-2024 Lattice Semiconductor Corp. All Lattice trademarks, registered trademarks, patents, and disclaimers are as listed at www.latticesemi.com/legal.
All other brand or product names are trademarks or registered trademarks of their respective holders. The specifications and information herein are subject to change without notice.

Technical Support Assistance

Submit a technical support case through www.latticesemi.com/techsupport.

For frequently asked questions, refer to the Lattice Answer Database at www.latticesemi.com/Support/AnswerDatabase.

© 2023-2024 Lattice Semiconductor Corp. All Lattice trademarks, registered trademarks, patents, and disclaimers are as listed at www.latticesemi.com/legal.
All other brand or product names are trademarks or registered trademarks of their respective holders. The specifications and information herein are subject to change without notice.

Revision History

Revision 1.4, March 2024

Section	Change Summary
All	• Updated the part number of the Avant-E FPGA from *LAV-AT-500E* to *LAV-AT-E70*. • Updated the part number of the Avant-E Evaluation board from *LAV-500E-EVN* to *LAV-E70-EVN*. • Changed the term *Master* to *Controller*. • Changed the term *Slave* to *Target*.
Inclusive language	Added this section.
Introduction	• Updated the list of items included in the Avant-E Evaluation Board Kit. • Included Platform Manager 2 in the feature's list of the Avant-E Evaluation board. • Updated Figure 1.1. Top View of Avant-E Evaluation Board and Figure 1.2. Bottom View of Avant Evaluation Board.

Jumper Definition	• Updated Figure 2.1. Top View of Avant Evaluation Board – Jumper Locations.
	• Updated Table 2.1. Jumper Setting.
	  • Added JP11, JP15, JP69 to JP80.
	  • Removed JP25.
	  • Updated JP57 to JP63.

Power Scheme	• Added U107 and U45 to Figure 3.1. Board Power Scheme (1). • Updated part number of the Avant-E FPGA from *LAV-AT-500E* to *LAV-AT-E70* in Figure 3.2. Board Power Scheme (2). • Added FMC_ADJ column to Table 3.1. VCCIO Supply Options.
Programming Platform Manager 2	Added this section.
Programming Avant-E	• Removed the old subsection *SPI Flash Device Selection in Programmer*. • Updated the steps on how to program the Avant SRAM (Section 5.5). • Updated Figure 5.5. Radiant Programmer and Figure 5.6. Radiant Programmer – Device Properties. • Added the Programming of Flash subsection. • Added the Boot of Flash subsection.
Avant Clock Sources	• Updated the Avant Evaluation board option from *two* to *three*. • Added a 125 MHz clock frequency to Table 6.1. Clock Sources.

Headers/Connectors and Avant Device Ball Mapping	• Added the following statement to the introduction of Section 9: *Bank 5 shares signals between FMC1 and FMC2. If both FMC connectors are used, ensure the signals on Bank 5 are the same voltage level*.
	• Updated Table 9.1. FMC1 Pin Connections.
	  • Mapped FMC1_HA08N (F10) to *AG1*.
	  • Mapped FMC1_HA08P (F11) to *AG2*.
	• Updated table note 2 in Table 9.5. Raspberry PI header Pin Connections.
	• Updated table note 1 in Table 9.6. SPI Flash Configuration Header Pin Connections.

Software Requirements	• Updated the Lattice Radiant Software and Programmer to *version 2023.2 or later*. • Updated the Lattice Diamond Software and Programmer to *version 3.13 or later*.
Appendix A	Updated the Avant Evaluation Board Schematics for Rev. D.
Appendix B	Updated the Avant Evaluation Board BOM for Rev. D.
Appendix C	Added this section.

Revision 1.3, September 2023

Section	Change Summary
Headers/Connectors and Avant Device Ball Mapping	Changed the Avant Ball Location pin from AA10 to AK22 in Table 9.2. FMC2 Pin Connections.

© 2023-2024 Lattice Semiconductor Corp. All Lattice trademarks, registered trademarks, patents, and disclaimers are as listed at www.latticesemi.com/legal.
All other brand or product names are trademarks or registered trademarks of their respective holders. The specifications and information herein are subject to change without notice.

Revision 1.2, March 2023

Section	Change Summary
Avant Evaluation Board Schematics	Updated the board schematics.

Revision 1.1, February 2023

Section	Change Summary
Programming	Newly added the Programming of Avant SRAM section.

Revision 1.0, January 2023

Section	Change Summary
All	Production release.
Introduction	Updated Figure 1.1. Top View of Avant-E Evaluation Board and Figure 1.2. Bottom View of Avant Evaluation Board reflecting the most recent revision of the Board.

Revision 0.80, December 2022

Section	Change Summary
All	Initial Preliminary release.

© 2023-2024 Lattice Semiconductor Corp. All Lattice trademarks, registered trademarks, patents, and disclaimers are as listed at www.latticesemi.com/legal.
All other brand or product names are trademarks or registered trademarks of their respective holders. The specifications and information herein are subject to change without notice.

www.latticesemi.com