EVL1654N-TF-00A

16V, 4A, Synchronous Step-Down Converter in SOT563 Package Evaluation Board

DESCRIPTION

The EVL1654N-TF-00A evaluation board is designed to demonstrate the capabilities of the MP1654N, a synchronous, rectified, step-down, switch-mode converter with built-in, internal power MOSFETs.

The MP1654N can achieve up to 4A of continuous output current (I_{OUT}) from a 4.5V to 16V input voltage (V_{IN}) range, with excellent load and line regulation. The output voltage (V_{OUT}) can be regulated to as low as 0.6V.

Constant-on-time (COT) control provides fast transient response, easy loop design, and tight output regulation. Full protection features include short-circuit protection (SCP), over-current protection (OCP), under-voltage protection (UVP), and thermal shutdown.

The MP1654N requires a minimal number of readily available, standard external components, and is available in an ultra-small SOT563 package.

PERFORMANCE SUMMARY

Specifications are at T_A = 25°C, unless otherwise noted.

Parameters	Conditions	Value
Input voltage (V_{IN}) range		4.5V to 16V
Output voltage (V_{OUT})	V_{IN} = 4.5V to 16V, I_{OUT} = 0A to 4A	V_{OUT} = 3.3V
Maximum output current (I_{OUT})	V_{IN} = 4.5V to 16V	4A
Full load efficiency	V_{IN} = 12V, V_{OUT} = 3.3V, I_{OUT} = 4A	89.7%
Peak efficiency	V_{IN} = 12V, V_{OUT} = 3.3V, I_{OUT} = 1A	94.0%
Switching frequency (f_{SW})		1100kHz

MPL Optimized Performance with MPS Inductor MPL-AL6050 Series

EVL1654N-TF-00A EVALUATION BOARD

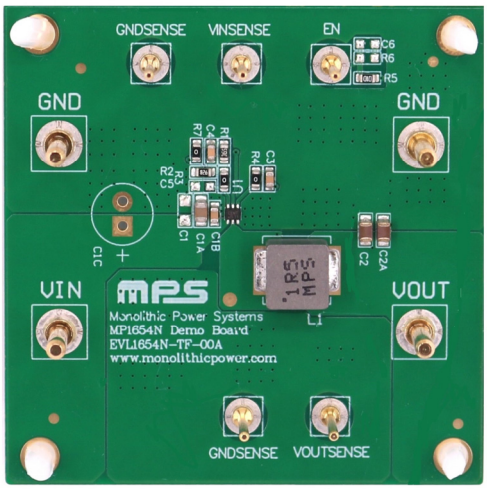

LxWxH (50mmx50mmx1.6mm)

2 Layers, 2oz/2oz

Board Number	MPS IC Number
EVL1654N-TF-00A	MP1654NGTF

MPS Proprietary Information. Patent Protected. Unauthorized Photocopy and Duplication Prohibited.
© 2025 MPS. All Rights Reserved.

QUICK START GUIDE

The EVL1654N-TF-00A evaluation board is easy to set up and use to evaluate the performance of the MP1654N. For proper measurement equipment set-up, refer to Figure 1 and follow the steps below:

1. Preset the power supply to 12V, then turn off the power supply. (1)
2. Connect the power supply terminals to:
   a. Positive (+): VIN
   b. Negative (-): GND
3. Connect the load terminals to:
   a. Positive (+): VOUT
   b. Negative (-): GND
4. After making the connections, turn on the power supply. The board should automatically start up.
5. Check for the proper output voltage (V_{OUT}) between the VOUTSENSE and GNDSENSE terminals.
6. Once the proper V_{OUT} is established, adjust the load within the operating range and measure the efficiency, V_{OUT} ripple, and other parameters. (2)
7. After completing all tests, adjust the load to 0A, then turn off the input power supply.

Notes:

1) Ensure that V_{IN} does not exceed 16V.
2) When measuring the V_{OUT} or V_{IN} ripple, do not use the long ground lead on the oscilloscope probe.

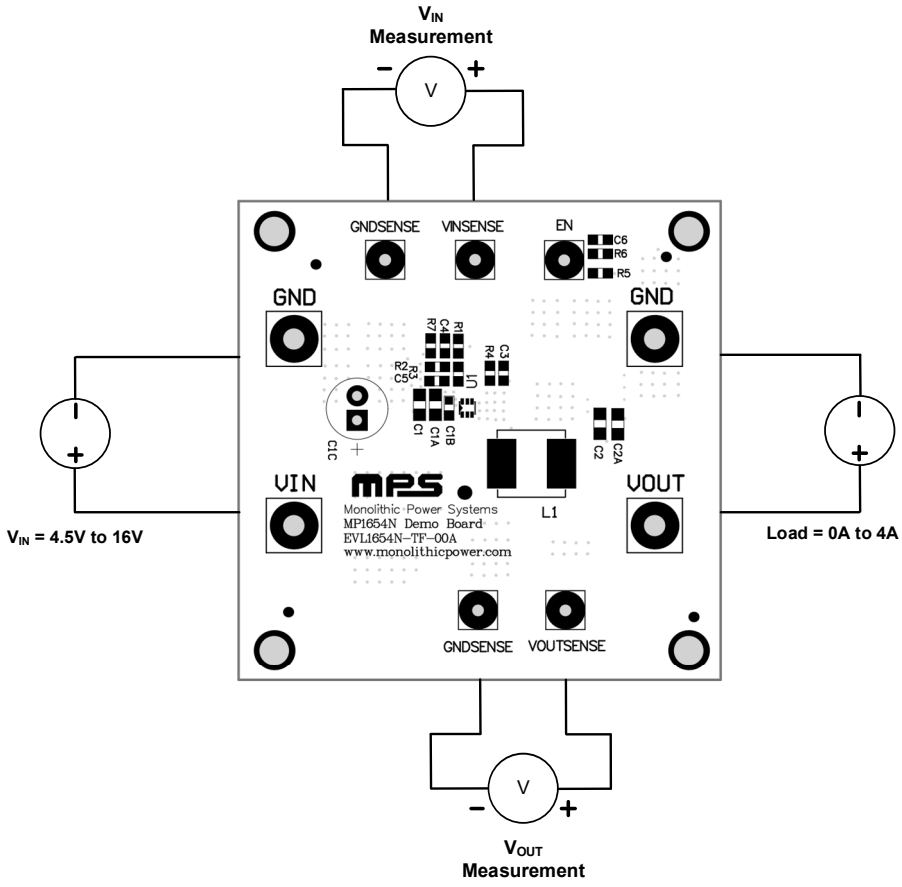

Figure 1: Proper Measurement Equipment Set-Up

MPS Proprietary Information. Patent Protected. Unauthorized Photocopy and Duplication Prohibited.
© 2025 MPS. All Rights Reserved.

EVALUATION BOARD SCHEMATIC

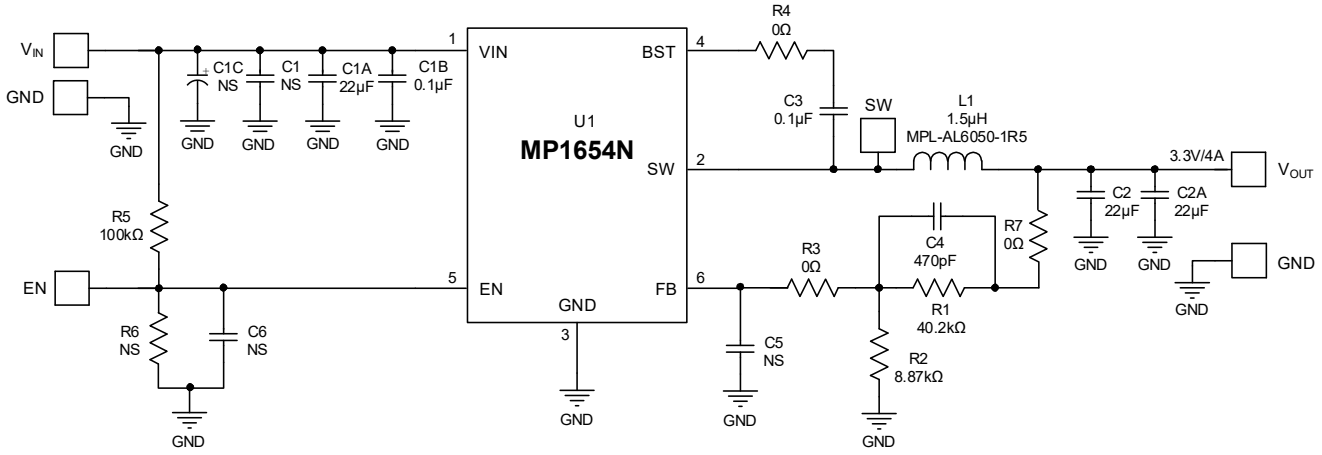

Figure 2: Evaluation Board Schematic

MPS Proprietary Information. Patent Protected. Unauthorized Photocopy and Duplication Prohibited.
© 2025 MPS. All Rights Reserved.

EVL1654N-TF-00A BILL OF MATERIALS

Qty	Ref	Value	Description	Package	Manufacturer	Manufacturer PN
1	C1A	22µF	Ceramic capacitor, 25V, X5R	0805	Murata	GRM21BR61E226ME44L
0	C1, C1C, C5, C6	NS				
2	C2, C2A	22µF	Ceramic capacitor, 16V, X5R	0805	Murata	GRM21BR61C226ME44L
2	C1B, C3	0.1µF	Ceramic capacitor, 25V, X7R	0603	Wurth	885012206071
1	C4	470pF	Ceramic capacitor, 50V, X7R	0603	Wurth	885012206081
1	R1	40.2kΩ	Thick film resistor, 1%	0603	Yageo	RC0603FR-0740K2L
1	R2	8.87kΩ	Thick film resistor, 1%	0603	Yageo	RC0603FR-078K87L
3	R3, R4, R7	0Ω	Thick film resistor, 1%	0603	Yageo	RC0603FR-070RL
1	R5	100kΩ	Thick film resistor, 1%	0603	Yageo	RC0603FR-07100KL
0	R6	NS				
1	L1	1.5µH	Inductor, D_{CR} = 6mΩ, I_{SAT} = 18A	6.6mmx 6.4mmx 4.8mm	MPS	MPL-AL6050-1R5
1	U1	MP1654N	16V,4A, 1MHz, synchronous step-down converter	SOT563 (1.6mmx 1.6mm)	MPS	MP1654NGTF

MPS Proprietary Information. Patent Protected. Unauthorized Photocopy and Duplication Prohibited.
© 2025 MPS. All Rights Reserved.

EVB TEST RESULTS

Performance curves and waveforms are tested on the evaluation board. V_{IN} = 12V, V_{OUT} = 3.3V, T_A = 25°C, unless otherwise noted.

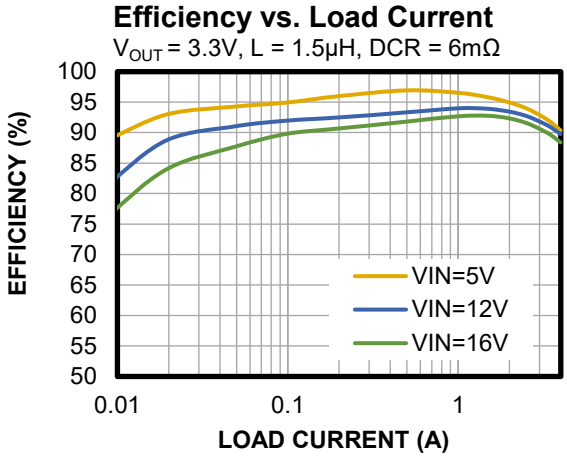

MPS Proprietary Information. Patent Protected. Unauthorized Photocopy and Duplication Prohibited.
© 2025 MPS. All Rights Reserved.

EVB TEST RESULTS *(continued)*

Performance curves and waveforms are tested on the evaluation board. V_{IN} = 12V, V_{OUT} = 3.3V, T_A = 25°C, unless otherwise noted.

Steady State and Output Ripple

I_{OUT} = 0A

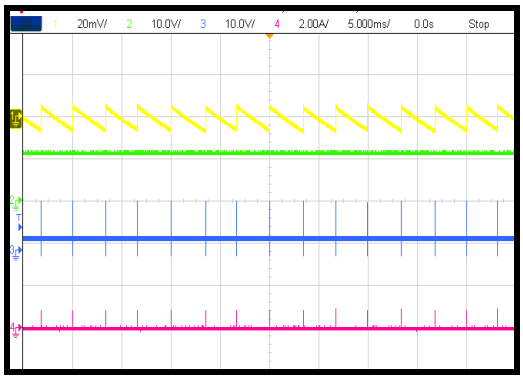

Steady State and Output Ripple

I_{OUT} = 4A

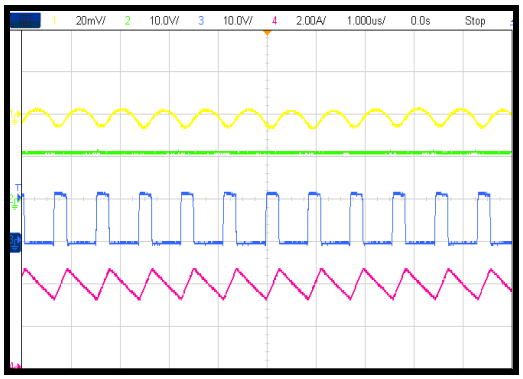

Load Transient Output Ripple

I_{OUT} = 2A to 4A, slew rate = 2.5A/μs (e-load)

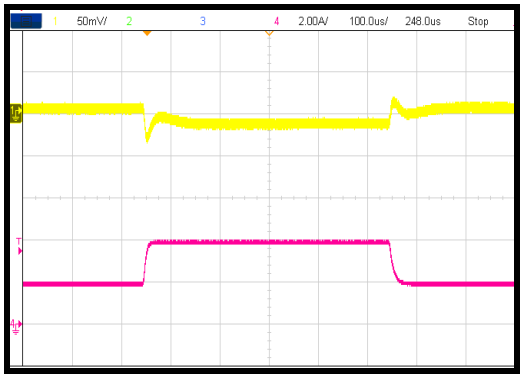

MPS Proprietary Information. Patent Protected. Unauthorized Photocopy and Duplication Prohibited.
© 2025 MPS. All Rights Reserved.

PCB LAYOUT

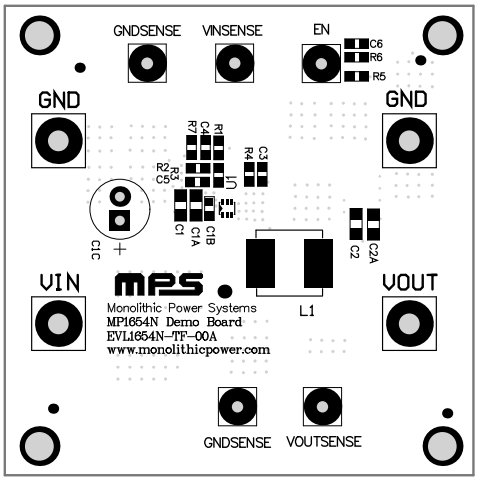

Figure 3: Top Silk

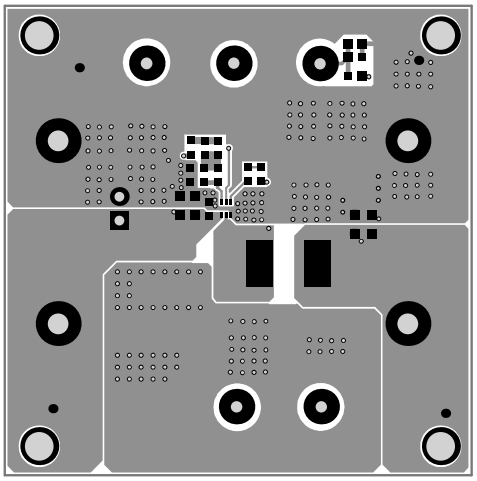

Figure 4: Top Layer

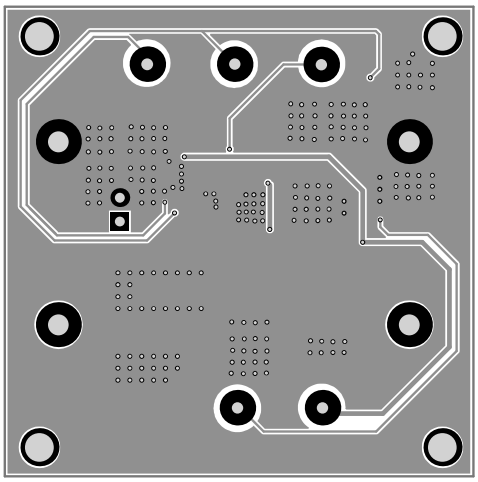

Figure 5: Bottom Layer

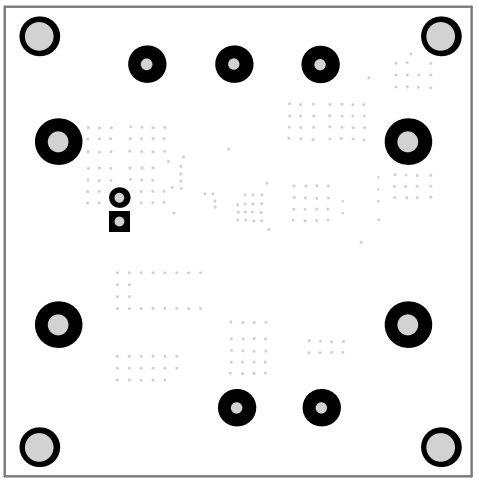

Figure 6: Bottom Silk

MPS Proprietary Information. Patent Protected. Unauthorized Photocopy and Duplication Prohibited.
© 2025 MPS. All Rights Reserved.

REVISION HISTORY

Revision #	Revision Date	Description	Pages Updated
1.0	9/19/2025	Initial Release	-

Notice: The information in this document is subject to change without notice. Please contact MPS for current specifications. Users should warrant and guarantee that third-party Intellectual Property rights are not infringed upon when integrating MPS products into any application. MPS will not assume any legal responsibility for any said applications.

MPS Proprietary Information. Patent Protected. Unauthorized Photocopy and Duplication Prohibited.
© 2025 MPS. All Rights Reserved.