FIGURE A-1: EVB-LAN8770-RMII™ EVALUATION BOARD SCHEMATIC

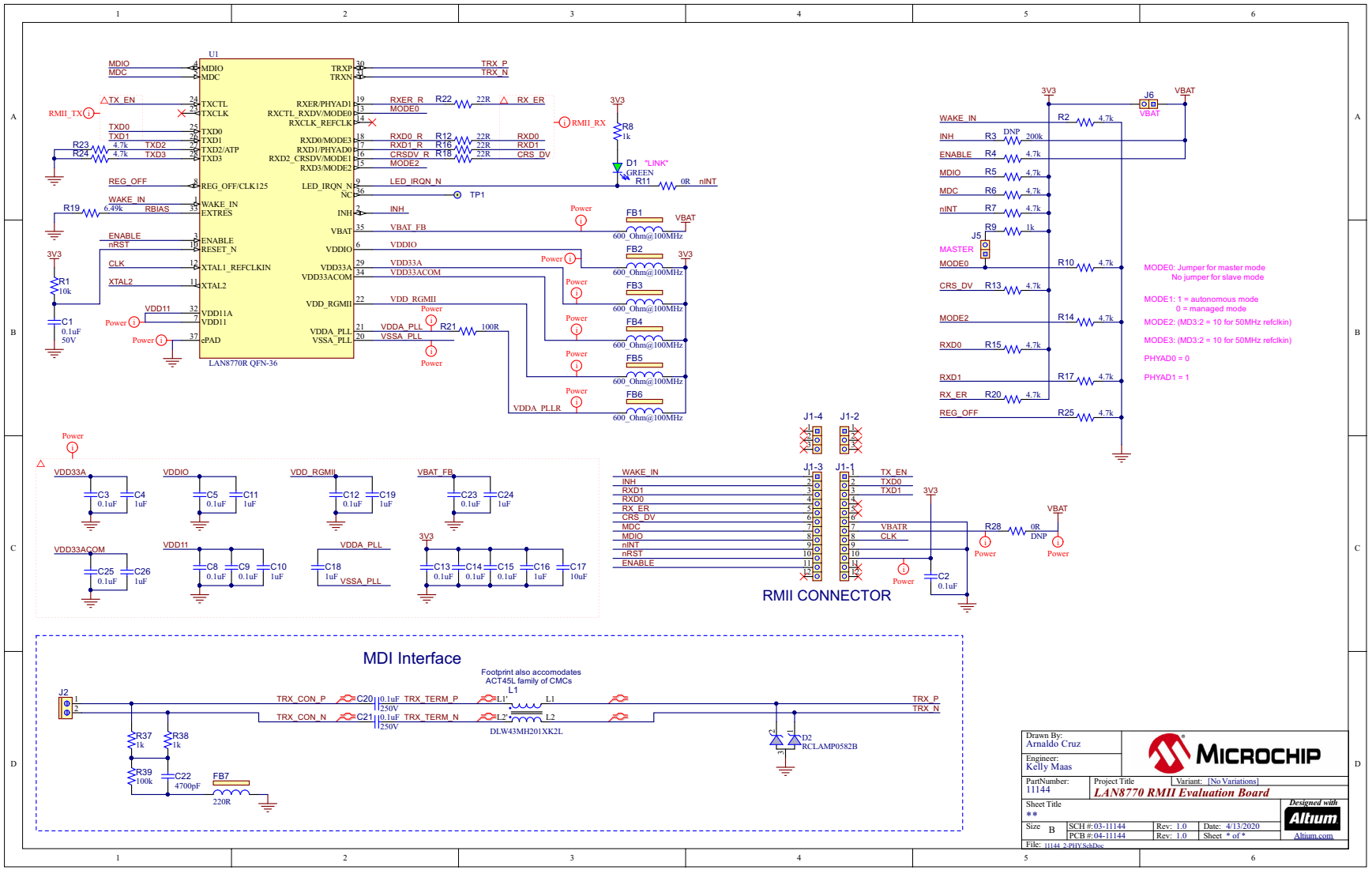

© 2020 Microchip Technology Inc.