EVB_KSZ9131RNX

Table of Contents

Sheet	Description
1	Title Page
2	KSZ9131RNX Power
3	KSZ9131RNX
4	KSZ9131RNX Hi-Speed RGMII Interface

Revision History

Revision	Date	Revision Summary	Author
1	12/19/2019	Initial release of design	J. MacKay

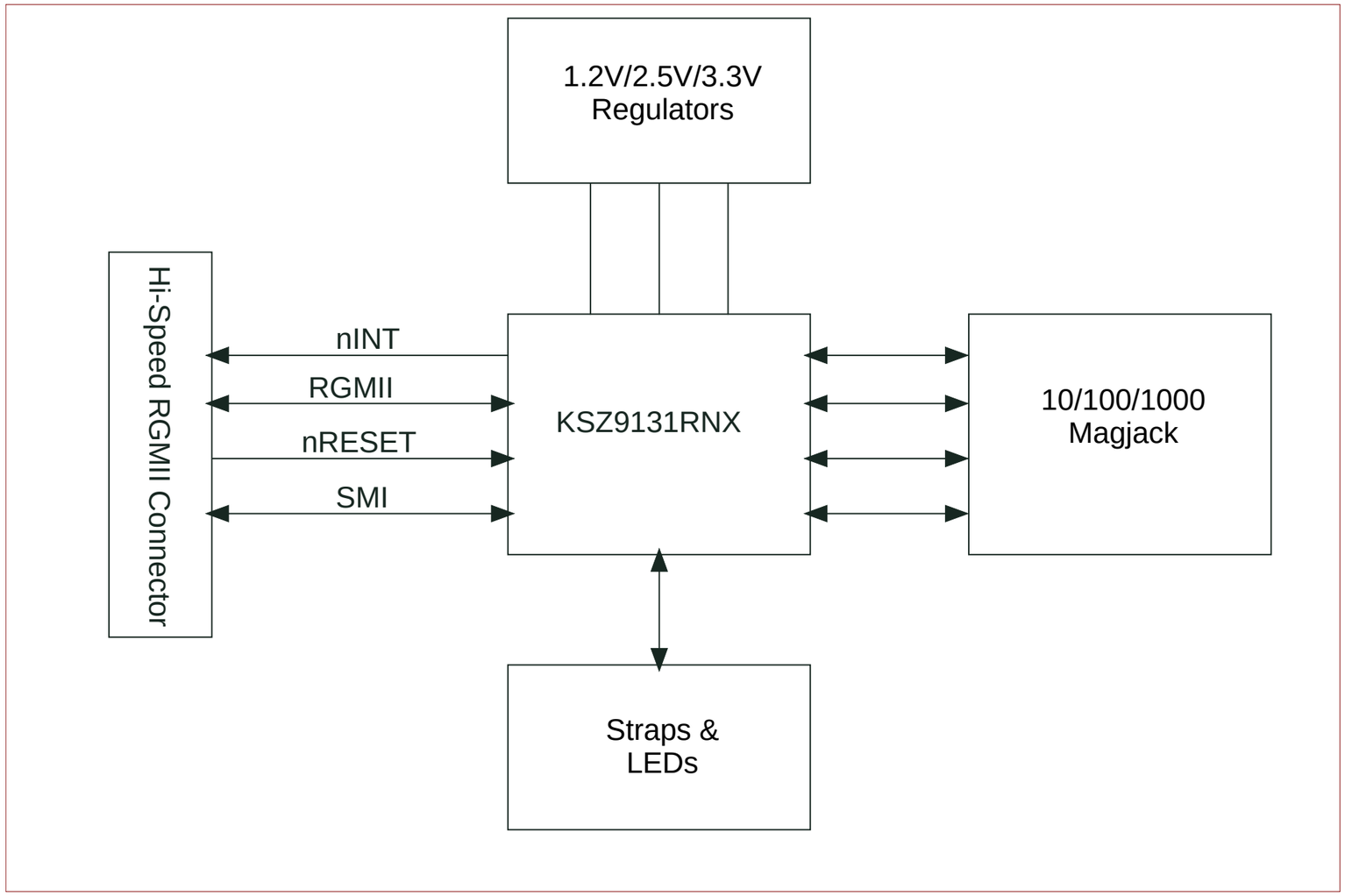

Notes

MICROCHIP	Microchip Technology, Inc. USB/Network Group - UNG www.Microchip.com	Designed with Altium Altium.com	
Description: EVB_KSZ9131RNX			
Page Title: Title Page			
Project Name: EVB_KSZ9131RNX		PN: 03-11073	
Size: B	Date: 12/19/2019	Designer: John MacKay	Sheet 1 of 4	Rev 1

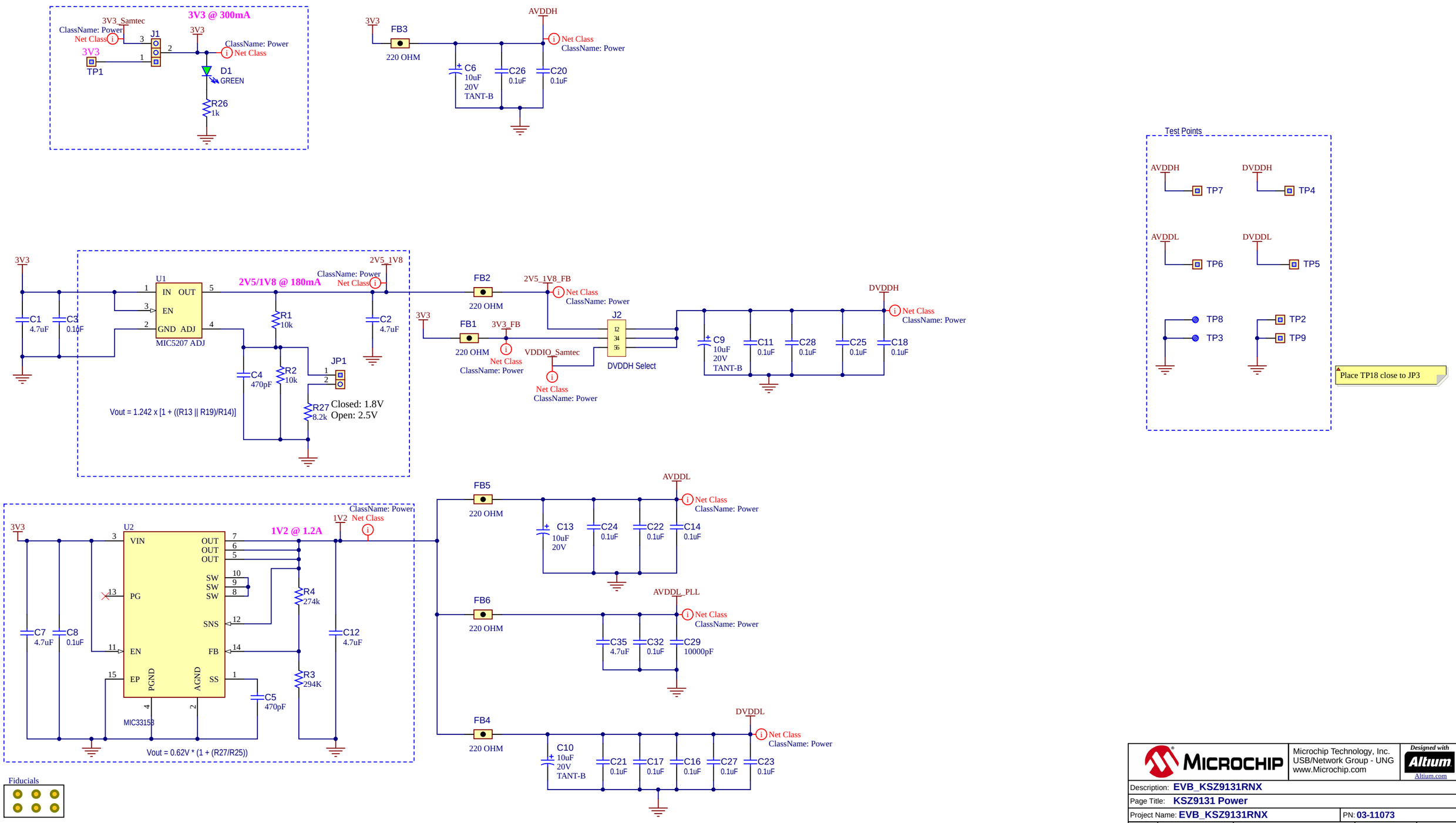

MICROCHIP	Microchip Technology, Inc. USB/Network Group - UNG www.Microchip.com	Designed with Altium Altium.com
Description: EVB_KSZ9131RNX		
Page Title: KSZ9131 Power		
Project Name: EVB_KSZ9131RNX	PN: 03-11073	
Size: B Date: 12/19/2019	Designer: J. MacKay	Sheet 2 of 4 Rev 1

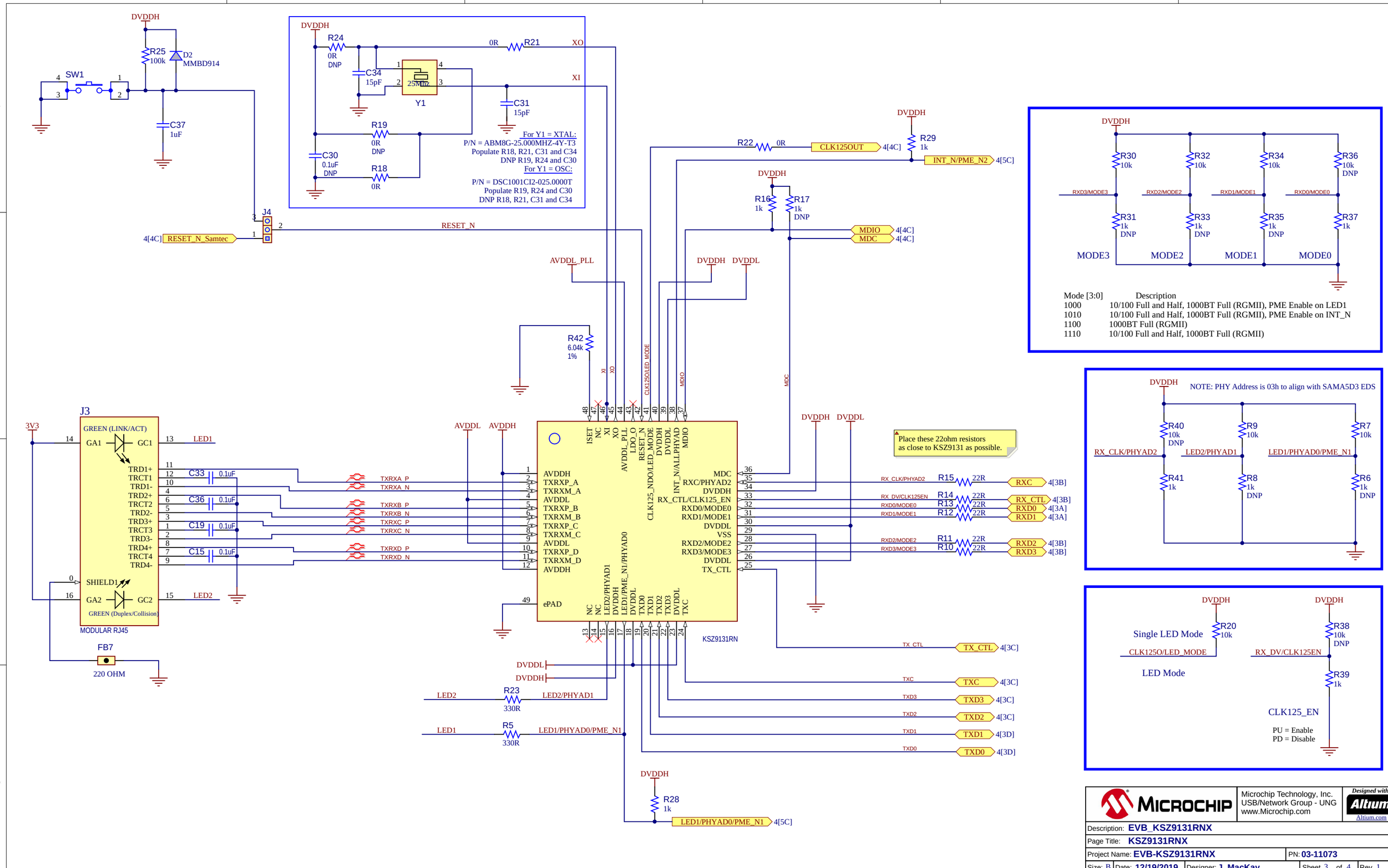
DVDDH
R25
100k
D2
MMBD914
SW1
C37
1uF
R24
0R
DNP
C34
15pF
25MHz
Y1
0R
R21
XO
XI
C31
15pF
R19
0R
DNP
C30
0.1uF
DNP
R18
0R
For Y1 = XTAL:
P/N = ABM8G-25.000MHZ-4Y-T3
Populate R18, R21, C31 and C34
DNP R19, R24 and C30
For Y1 = OSC:
P/N = DSC1001CI2-025.0000T
Populate R19, R24 and C30
DNP R18, R21, C31 and C34
J4
4[4C] RESET_N_Samtec
RESET_N
R22
0R
CLK125OUT
4[4C]
R29
1k
INT_N/PME_N2
4[5C]
R16
1k
R17
1k
DNP
MDIO
MDC
AVDDL_PLL
DVDDL
R42
6.04k
1%
3V3
J3
GREEN (LINK/ACT)
GA1
GC1
LED1
TRD1+
TRCT1
TRD1-
TRD2+
TRCT2
TRD2-
TRD3+
TRCT3
TRD3-
TRD4+
TRCT4
TRD4-
C33
C36
C19
C15
0.1uF
SHIELD1
GA2
GC2
LED2
GREEN (Duplex/Collision)
MODULAR RJ45
FB7
220 OHM
TXRXA_P
TXRXA_N
TXRXB_P
TXRXB_N
TXRXC_P
TXRXC_N
TXRXD_P
TXRXD_N
AVDDL
AVDDH
ISET
NC
XI
XO
AVDDL_PLL
LDO_O
RESET_N
CLK125_NDO/LED_MODE
DVDDH
DVDDL
INT_N/ALLPHYAD
MDIO
AVDDH
TXRXP_A
TXRXM_A
AVDDL
TXRXP_B
TXRXM_B
TXRXP_C
TXRXM_C
AVDDL
TXRXP_D
TXRXM_D
AVDDH
ePAD
MDC
RXC/PHYAD2
DVDDH
RX_CTL/CLK125_EN
RXD0/MODE0
RXD1/MODE1
DVDDL
VSS
RXD2/MODE2
RXD3/MODE3
DVDDL
TX_CTL
NC
NC
LED2/PHYAD1
DVDDH
LED1/PME_N1/PHYAD0
DVDDL
TXD0
TXD1
TXD2
TXD3
DVDDL
TXC
KSZ9131RN
Place these 22ohm resistors
as close to KSZ9131 as possible.
RX_CLK/PHYAD2
R15
22R
RXC
4[3B]
RX_DV/CLK125EN
R14
22R
RX_CTL
4[3B]
RXD0/MODE0
R13
22R
RXD0
4[3A]
RXD1/MODE1
R12
22R
RXD1
4[3A]
RXD2/MODE2
R11
22R
RXD2
4[3B]
RXD3/MODE3
R10
22R
RXD3
4[3B]
TX_CTL
TX_CTL
4[3C]
TXC
TXC
4[3C]
TXD3
TXD3
4[3C]
TXD2
TXD2
4[3C]
TXD1
TXD1
4[3D]
TXD0
TXD0
4[3D]
LED2
R23
330R
LED2/PHYAD1
LED1
R5
330R
LED1/PHYAD0/PME_N1
R28
1k
LED1/PHYAD0/PME_N1
4[5C]
R30
10k
R32
10k
R34
10k
R36
10k
DNP
RXD3/MODE3
RXD2/MODE2
RXD1/MODE1
RXD0/MODE0
R31
1k
DNP
R33
1k
DNP
R35
1k
DNP
R37
1k
MODE3
MODE2
MODE1
MODE0
Mode [3:0] Description
1000 10/100 Full and Half, 1000BT Full (RGMII), PME Enable on LED1
1010 10/100 Full and Half, 1000BT Full (RGMII), PME Enable on INT_N
1100 1000BT Full (RGMII)
1110 10/100 Full and Half, 1000BT Full (RGMII)
NOTE: PHY Address is 03h to align with SAMA5D3 EDS
R40
10k
DNP
R9
10k
R7
10k
RX_CLK/PHYAD2
LED2/PHYAD1
LED1/PHYAD0/PME_N1
R41
1k
R8
1k
DNP
R6
1k
DNP
Single LED Mode
R20
10k
CLK125O/LED_MODE
LED Mode
R38
10k
DNP
RX_DV/CLK125EN
R39
1k
CLK125_EN
PU = Enable
PD = Disable
MICROCHIP
Microchip Technology, Inc.
USB/Network Group - UNG
www.Microchip.com
Designed with
Altium
Altium.com
Description: EVB_KSZ9131RNX
Page Title: KSZ9131RNX
Project Name: EVB-KSZ9131RNX
PN: 03-11073
Size: B
Date: 12/19/2019
Designer: J. MacKay
Sheet 3 of 4
Rev 1

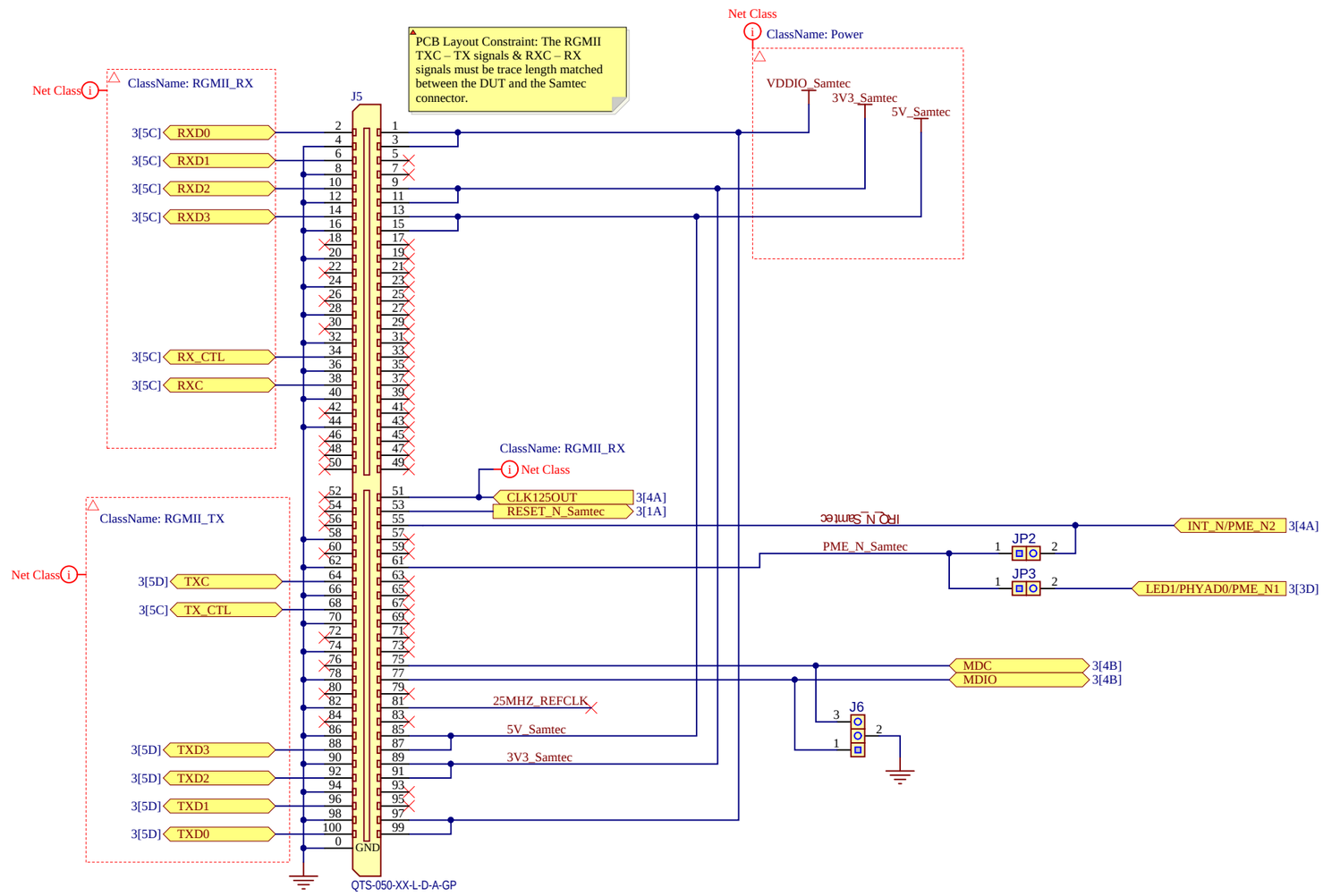

Samtec mounted on bottom side.

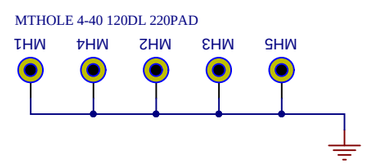

MICROCHIP	Microchip Technology, Inc. USB/Network Group - UNG www.Microchip.com
Description: **EVB_KSZ9131RNX**	
Page Title: **KSZ9131 Hi-Speed RGMII Interface**	
Project Name: **EVB_KSZ9131RNX**	PN: **03-11073**
Size: B Date: **12/19/2019** Designer: **J. MacKay**	Sheet 4 of 4 Rev 1