© 2023 TE Connectivity. All Rights Reserved.

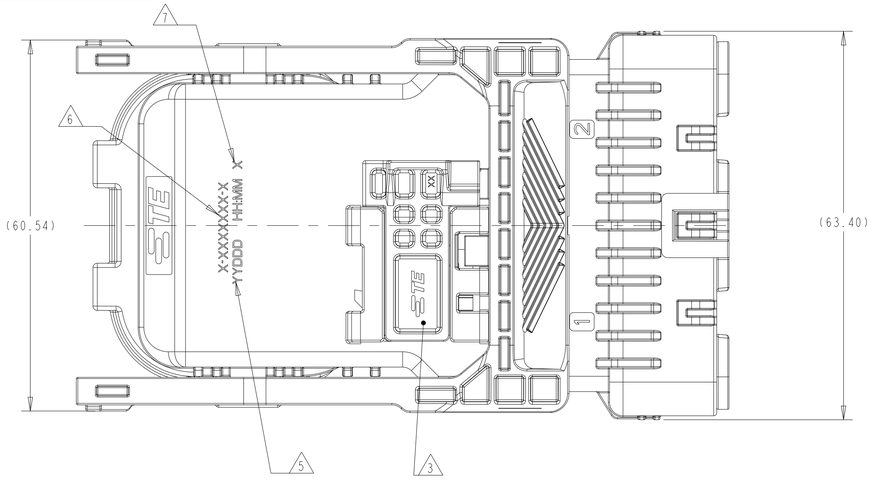

REVISIONS					
P	LTR	DESCRIPTION	DATE	DWN	APVD
	1	INITIAL RELEASE	04OCT2021	GTG	DR
	2	ECN-22-141989	04MAR2022	GTG	LG
	A	ECN-22-167201	29JUL2022	GTG	LG
	B	ECN-23-228065	08NOV2023	GTG	LG

1. 2843111-1 SHOWN IN GENERAL VIEWS.
2. SUPPLY CONDITION: LEVER IN CLOSED POSITION.
3. SUPPLY CONDITION: CPA IN CLOSED POSITION.
4. SUPPLY CONDITION: TPA IN OPEN POSITION.
5. LASER MARK DATE CODE YYDDD HH:MM FORMAT.
6. LASER MARK TE PART NUMBER.
7. LASER MARK WORK CENTER.
8. (B) THIS PRODUCT HAS NOT COMPLETED VALIDATION TESTING.

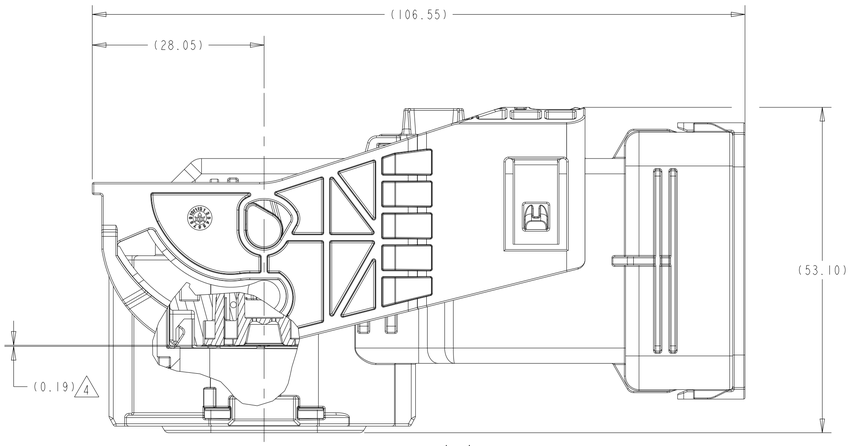

SECTION A-A

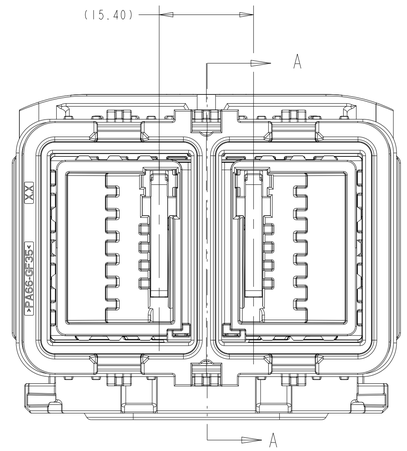

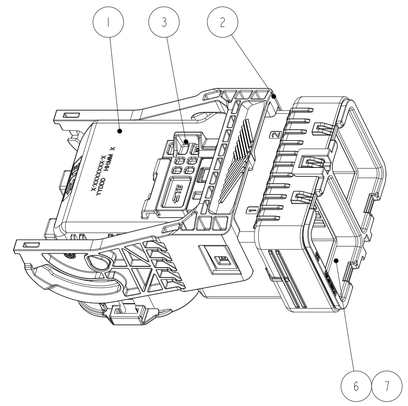

ISO VIEW
SCALE 1:1

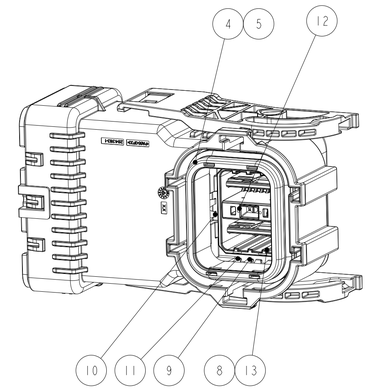

ISO VIEW
SCALE 1:1

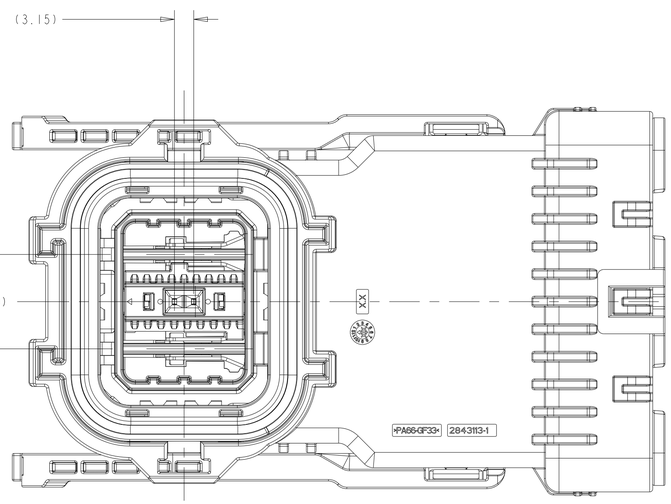

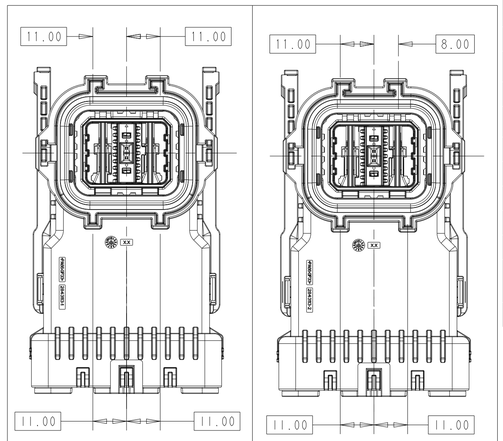

CODE A (2843111-1) | CODE B (2843111-2)

(B)	(B)	(B)					
-	-	1	1	ORANGE	-	PLUG INNR HVIL ASSY. HC-STAK 25 XE, 090	13
1	1	1	1	RED	PA66-GF30	TPA, PLG, HC-STAK 25-2PHI, XE	12
2	2	2	2	-	STAINLESS STEEL	TAB RETAINER, PLG, HC-STAK 25, XE	11
1	1	1	1	-	CuNiSi PLATING:Ag OVER Ni	LOWER SHLD, 090 PLG, HC-STAK 25-2PHI, XE	10
1	1	1	1	-	CuNiSi PLATING:Ag OVER Ni	UPPER SHLD, 090 PLG, HC-STAK 25-2PHI, XE	9
1	1	-	-	NATURAL	PA66-GF30	PLG INR HSG WITHOUT HVIL, HC-STAK 25-2PHI, XE	8
1	1	1	1	YELLOW	40 DUROMETER SILICONE, LUBRICATED	CABLE SEAL, PERIPH, HC-STAK 25-2PHI, XE	7
1	1	1	1	BLACK	PA66-GF35	CABLE SEAL HSG, HC-STAK 25-2PHI, XE	6
1	1	1	1	BLUE	40 DUROMETER SILICONE, LUBRICATED	PERIPHERAL SEAL, PLG, HC-STAK 25-2PHI, XE	5
1	1	1	1	BLACK	PA66-GF35	SEAL RETAINER, PLG, HC-STAK 25-2PHI, XE	4
1	1	1	1	RED	PA66-GF35	CPA, VX10	3
1	1	1	1	BLACK	PA66-GF35	LEVER, 090 PLG, HC-STAK 25-2PHI, XE	2
1	-	1	-	ORANGE	PA66-GF33	PLG HSG, OUTER, HC-STAK 25-2PHI, XE, CODE B	1
-	1	-	1	ORANGE	PA66-GF33	PLG HSG, OUTER, HC-STAK 25-2PHI, XE, CODE A	
1-2843111-2	1-2843111-1	(B) 2843111-2	(B) 2843111-1	COLOR	MATERIAL	DESCRIPTION	ITEM NO
QTY REQD PER ASSY				PARTS LIST			

THIS DRAWING IS A CONTROLLED DOCUMENT.

DIMENSIONS: mm

TOLERANCES UNLESS OTHERWISE SPECIFIED:
0 PLC ±-
1 PLC ±
2 PLC ±0.50
3 PLC ±-
4 PLC ±-
ANGLES ±5°

MATERIAL - -
FINISH - -

DWN GIRISH T G 04OCT2021
CHK L. GATESMAN 04OCT2021
APVD D. RHEIN 05OCT2021
PRODUCT SPEC 108-160678
APPLICATION SPEC 114-160204
WEIGHT 144 g

TE Connectivity

NAME PLUG ASSEMBLY, 2POS, HC-STAK25, XE

SIZE	CAGE CODE	DRAWING NO	RESTRICTED TO
A1	00779	C-2843111	-

CUSTOMER DRAWING | SCALE 2:1 | SHEET 1 OF 1 | REV B

4805 (3/13)