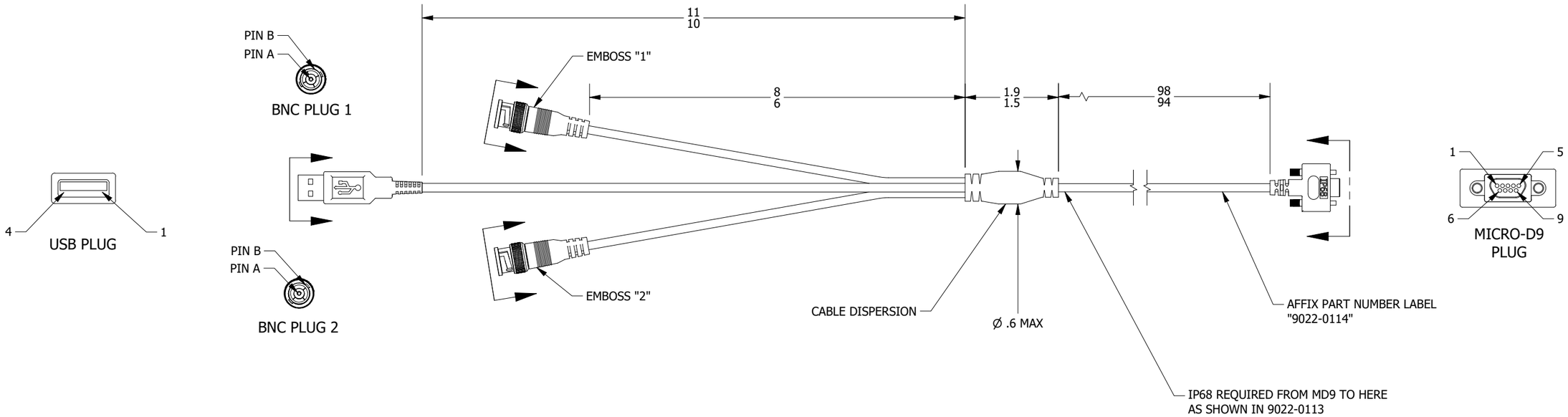

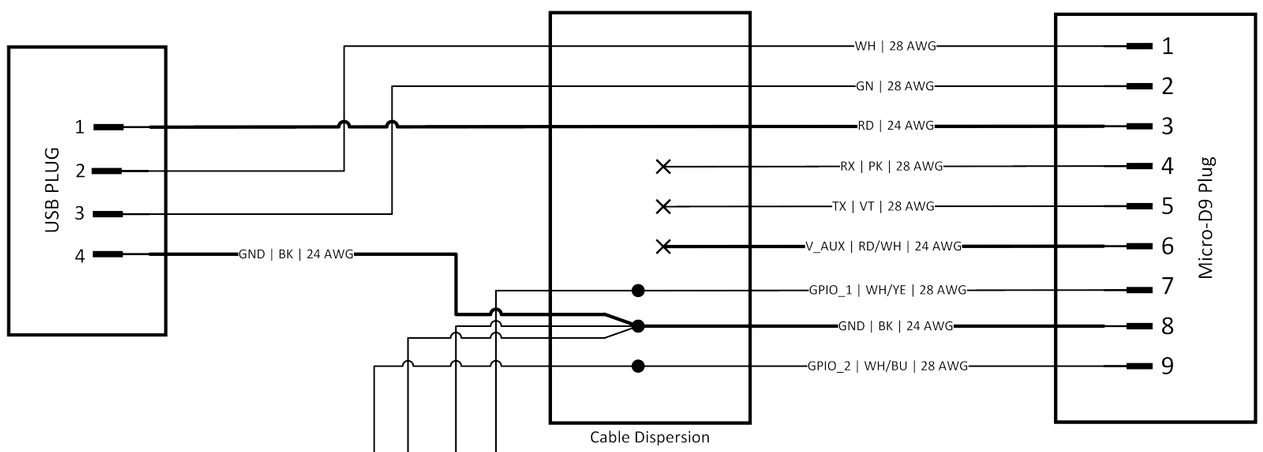

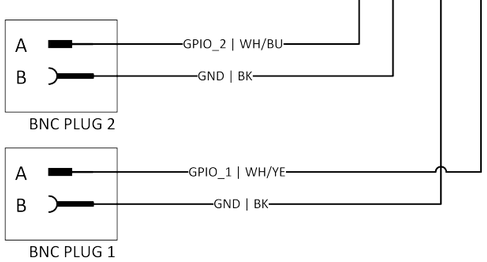

NOTES:

PIN NUMBERS NOT LISTED ARE NOT CONNECTED

UNUSED WIRES (X) SHOULD BE ISOLATED AND SEALED UNDER OVERMOLD

SPLICED WIRES SHOULD BE ISOLATED AND SEALED UNDER OVERMOLD

UNLESS OTHERWISE SPECIFIED
ALL DIMENSIONS ARE IN INCHES.
TOLERANCES:(UOS):
.X = ± .02
.XX = ± .01
.XXX = ± .005
HOLE DIAMETERS: ± .002
ANGLES: ± 0.5°
SURFACE FINISH: 63
MICROINCHES
MATERIAL:

DRAWN S. SMITH 10/26/22

REFERENCE PLM SYSTEM
FOR APPROVALS

HEREIN IS CONFIDENTIAL AND PROPRIETARY TO LORD CORPORATION, A SUBSIDIARY OF PARKER HANNIFIN, AND SHALL NOT BE REPRODUCED OR DISCLOSED IN WHOLE OR IN PART OR USED FOR ANY UNAUTHORIZED PURPOSE UNLESS EXPRESSLY AUTHORIZED IN WRITING BY LORD CORPORATION, A SUBSIDIARY OF PARKER HANNIFIN

Parker LORD
459 HURRICANE LN.
WILLISTON VT
802-862-6629

TITLE
USB_IO_HARNESS

DWG NO	REVISION	CAGE CODE
9022-0114	-	OXYZ9

SIZE: B | SHEET 1 OF 1 | WWW.MICROSTRAIN.COM