1LSb INL Dual DAC Evaluation Board User's Guide

© 2023 Microchip Technology Inc. and its subsidiaries

Note the following details of the code protection feature on Microchip products:

- Microchip products meet the specifications contained in their particular Microchip Data Sheet.
- Microchip believes that its family of products is secure when used in the intended manner, within operating specifications, and under normal conditions.
- Microchip values and aggressively protects its intellectual property rights. Attempts to breach the code protection features of Microchip product is strictly prohibited and may violate the Digital Millennium Copyright Act.
- Neither Microchip nor any other semiconductor manufacturer can guarantee the security of its code. Code protection does not mean that we are guaranteeing the product is "unbreakable" Code protection is constantly evolving. Microchip is committed to continuously improving the code protection features of our products.

This publication and the information herein may be used only with Microchip products, including to design, test, and integrate Microchip products with your application. Use of this information in any other manner violates these terms. Information regarding device applications is provided only for your convenience and may be superseded by updates. It is your responsibility to ensure that your application meets with your specifications. Contact your local Microchip sales office for additional support or, obtain additional support at https://www.microchip.com/en-us/support/design-help/client-support-services.

THIS INFORMATION IS PROVIDED BY MICROCHIP "AS IS". MICROCHIP MAKES NO REPRESENTATIONS OR WARRANTIES OF ANY KIND WHETHER EXPRESS OR IMPLIED, WRITTEN OR ORAL, STATUTORY OR OTHERWISE, RELATED TO THE INFORMATION INCLUDING BUT NOT LIMITED TO ANY IMPLIED WARRANTIES OF NON-INFRINGEMENT, MERCHANTABILITY, AND FITNESS FOR A PARTICULAR PURPOSE, OR WARRANTIES RELATED TO ITS CONDITION, QUALITY, OR PERFORMANCE.

IN NO EVENT WILL MICROCHIP BE LIABLE FOR ANY INDIRECT, SPECIAL, PUNITIVE, INCIDENTAL, OR CONSEQUENTIAL LOSS, DAMAGE, COST, OR EXPENSE OF ANY KIND WHATSOEVER RELATED TO THE INFORMATION OR ITS USE, HOWEVER CAUSED, EVEN IF MICROCHIP HAS BEEN ADVISED OF THE POSSIBILITY OR THE DAMAGES ARE FORESEEABLE. TO THE FULLEST EXTENT ALLOWED BY LAW, MICROCHIP'S TOTAL LIABILITY ON ALL CLAIMS IN ANY WAY RELATED TO THE INFORMATION OR ITS USE WILL NOT EXCEED THE AMOUNT OF FEES, IF ANY, THAT YOU HAVE PAID DIRECTLY TO MICROCHIP FOR THE INFORMATION.

Use of Microchip devices in life support and/or safety applications is entirely at the buyer's risk, and the buyer agrees to defend, indemnify and hold harmless Microchip from any and all damages, claims, suits, or expenses resulting from such use. No licenses are conveyed, implicitly or otherwise, under any Microchip intellectual property rights unless otherwise stated.

For information regarding Microchip's Quality Management Systems, please visit www.microchip.com/quality.

Trademarks

The Microchip name and logo, the Microchip logo, Adaptec, AVR, AVR logo, AVR Freaks, BesTime, BitCloud, CryptoMemory, CryptoRF, dsPIC, flexPWR, HELDO, IGLOO, JukeBlox, KeeLoq, Kleer, LANCheck, LinkMD, maXStylus, maXTouch, MediaLB, megaAVR, Microsemi, Microsemi logo, MOST, MOST logo, MPLAB, OptoLyzer, PIC, picoPower, PICSTART, PIC32 logo, PolarFire, Prochip Designer, QTouch, SAM-BA, SenGenuity, SpyNIC, SST, SST Logo, SuperFlash, Symmetricom, SyncServer, Tachyon, TimeSource, tinyAVR, UNI/O, Vectron, and XMEGA are registered trademarks of Microchip Technology Incorporated in the U.S.A. and other countries.

AgileSwitch, APT, ClockWorks, The Embedded Control Solutions Company, EtherSynch, Flashtec, Hyper Speed Control, HyperLight Load, Libero, motorBench, mTouch, Powermite 3, Precision Edge, ProASIC, ProASIC Plus, ProASIC Plus logo, Quiet-Wire, SmartFusion, SyncWorld, Temux, TimeCesium, TimeHub, TimePictra, TimeProvider, TrueTime, and ZL are registered trademarks of Microchip Technology Incorporated in the U.S.A.

Adjacent Key Suppression, AKS, Analog-for-the-Digital Age, Any Capacitor, AnyIn, AnyOut, Augmented Switching, BlueSky, BodyCom, Clockstudio, CodeGuard, CryptoAuthentication, CryptoAutomotive, CryptoCompanion, CryptoController, dsPICDEM, dsPICDEM.net, Dynamic Average Matching, DAM, ECAN, Espresso T1S, EtherGREEN, GridTime, IdealBridge, In-Circuit Serial Programming, ICSP, INICnet, Intelligent Paralleling, IntelliMOS, Inter-Chip Connectivity, JitterBlocker, Knob-on-Display, KoD, maxCrypto, maxView, memBrain, Mindi, MiWi, MPASM, MPF, MPLAB Certified logo, MPLIB, MPLINK, MultiTRAK, NetDetach, Omniscient Code Generation, PICDEM, PICDEM.net, PICkit, PICtail, PowerSmart, PureSilicon, QMatrix, REAL ICE, Ripple Blocker, RTAX, RTG4, SAM-ICE, Serial Quad I/O, simpleMAP, SimpliPHY, SmartBuffer, SmartHLS, SMART-I.S., storClad, SQI, SuperSwitcher, SuperSwitcher II, Switchtec, SynchroPHY, Total Endurance, Trusted Time, TSHARC, USBCheck, VariSense, VectorBlox, VeriPHY, ViewSpan, WiperLock, XpressConnect, and ZENA are trademarks of Microchip Technology Incorporated in the U.S.A. and other countries.

SQTP is a service mark of Microchip Technology Incorporated in the U.S.A.

The Adaptec logo, Frequency on Demand, Silicon Storage Technology, and Symmcom are registered trademarks of Microchip Technology Inc. in other countries.

GestIC is a registered trademark of Microchip Technology Germany II GmbH & Co. KG, a subsidiary of Microchip Technology Inc., in other countries.

All other trademarks mentioned herein are property of their respective companies.

© 2023, Microchip Technology Incorporated and its subsidiaries.

All Rights Reserved.

ISBN:

© 2023 Microchip Technology Inc. and its subsidiaries

Table of Contents

Chapter 1. Product Overview
1.1 Introduction 9
1.2 1LSb INL Dual DAC Evaluation Board Overview 9
1.3 1LSb INL Dual DAC Evaluation Board Features 11
1.4 1LSb INL Dual DAC Evaluation Board Kit Contents 11
Chapter 2. Installation and Operation
2.1 Getting Started 13
2.2 SPI Demo 19
2.3 I2C Demo 21
Chapter 3. Code
3.1 Code 23
Appendix A. Schematics
A.1 Introduction 25
A.2 Board – Schematics 26
A.3 Board – Top Assembly Drawing 27
A.4 Board – Bottom Assembly Drawing 27
Appendix B. Bill of Materials (BOM) 30

© 2023 Microchip Technology Inc. and its subsidiaries

© 2023 Microchip Technology Inc. and its subsidiaries

Preface

NOTICE TO CUSTOMERS

All documentation becomes dated, and this manual is no exception. Microchip tools and documentation are constantly evolving to meet customer needs, so some actual dialogs and/or tool descriptions may differ from those in this document. Please refer to our website (www.microchip.com) to obtain the latest documentation available.

Documents are identified with a "DS" number. This number is located on the bottom of each page, in front of the page number. The numbering convention for the DS number is "DSXXXXXXXXA", where "XXXXXXXX" is the document number and "A" is the revision level of the document.

For the most up-to-date information on development tools, see the MPLAB® IDE online help. Select the Help menu, and then Topics to open a list of available online help files.

INTRODUCTION

This chapter contains general information that will be useful to know before using the 1LSb INL Dual DAC Evaluation Board. Items discussed in this chapter include:

- Document Layout
- Conventions Used in this Guide
- Recommended Reading
- The Microchip Website
- Customer Support
- Document Revision History

DOCUMENT LAYOUT

This document describes how to use the 1LSb INL Dual DAC Evaluation Board to demonstrate the performance of the MCP47CXDX2/MCP48CXDX2 DAC family. The manual layout is as follows:

- **Chapter 1. "Product Overview"** – Provides quick, step-by-step information on setting up the 1LSb INL Dual DAC Evaluation Board.
- **Chapter 2. "Installation and Operation"** – Important information about the 1LSb INL Dual DAC Evaluation Board.
- **Chapter 3. "Code"** – Refer to the board's web page for complete Code.
- **Appendix A. "Schematics"** – Refer to the board's web page for the complete Schematics.
- **Appendix B. "Bill of Materials (BOM)"** – Refer to the board's web page for the complete Bill of Materials.

© 2023 Microchip Technology Inc. and its subsidiaries

CONVENTIONS USED IN THIS GUIDE

This manual uses the following documentation conventions:

DOCUMENTATION CONVENTIONS

Description	Represents	Examples
Arial font:		
Italic characters	Referenced books	*MPLAB® IDE User's Guide*
	Emphasized text	...is the *only* compiler...
Initial caps	A window	the Output window
	A dialog	the Settings dialog
	A menu selection	select Enable Programmer
Quotes	A field name in a window or dialog	"Save project before build"
Underlined, Italic text with right angle bracket	A menu path	*File>Save*
Bold characters	A dialog button	Click **OK**
	A tab	Click the **Power** tab
N'Rnnnn	A number in verilog format, where N is the total number of digits, R is the radix and n is a digit.	4'b0010, 2'hF1
Text in angle brackets < >	A key on the keyboard	Press <Enter>, <F1>
Courier New font:		
Plain Courier New	Sample source code	`#define START`
	Filenames	`autoexec.bat`
	File paths	`c:\mcc18\h`
	Keywords	`_asm, _endasm, static`
	Command-line options	`-Opa+, -Opa-`
	Bit values	`0, 1`
	Constants	`0xFF, 'A'`
Italic Courier New	A variable argument	*`file`*`.o`, where *`file`* can be any valid filename
Square brackets [ ]	Optional arguments	`mcc18 [options]` *`file`* `[options]`
Curly brackets and pipe character: { | }	Choice of mutually exclusive arguments; an OR selection	`errorlevel {0|1}`
Ellipses...	Replaces repeated text	`var_name [, var_name...]`
	Represents code supplied by user	`void main (void) { ... }`

© 2023 Microchip Technology Inc. and its subsidiaries

RECOMMENDED READING

This user's guide describes how to use the 1LSb INL Dual DAC Evaluation Board. Other useful documents are listed below. The following Microchip documents are available and recommended as supplemental reference resources.

- **MCP47CXDX1/2 Data Sheet – *"8/10/12-Bit Digital-to-Analog Converters, 1 LSb INL, Single/Dual Voltage Output with I^2C Interface"* (DS20006666)**
- **MCP48CXDX1/2 Data Sheet – *"8/10/12-Bit Digital-to-Analog Converters, 1 LSb INL, Single/Dual Voltage Outputs with SPI Interface"* (DS20006556)**

THE MICROCHIP WEBSITE

Microchip provides online support via our website at www.microchip.com. This website is used as a means to make files and information easily available to customers. Accessible by using your favorite Internet browser, the website contains the following information:

- **Product Support** – Data sheets and errata, application notes and sample programs, design resources, user's guides and hardware support documents, latest software releases and archived software
- **General Technical Support** – Frequently Asked Questions (FAQs), technical support requests, online discussion groups, Microchip consultant program member listing
- **Business of Microchip** – Product selector and ordering guides, latest Microchip press releases, listing of seminars and events, listings of Microchip sales offices, distributors and factory representatives

CUSTOMER SUPPORT

Users of Microchip products can receive assistance through several channels:

- Distributor or Representative
- Local Sales Office
- Embedded System Engineer (ESE)
- Technical Support

Customers should contact their distributor, representative or field application engineer (FAE) for support. Local sales offices are also available to help customers. A listing of sales offices and locations is included in the back of this document.

Technical support is available through the website at: https://www.microchip.com/support.

DOCUMENT REVISION HISTORY

Revision A (May 2023)

- Initial release of this document.

© 2023 Microchip Technology Inc. and its subsidiaries

NOTES:

© 2023 Microchip Technology Inc. and its subsidiaries

Chapter 1. Product Overview

1.1 INTRODUCTION

This chapter provides an overview of the 1LSb INL Dual DAC Evaluation Board.

The MCP47CXDX2/MCP48CXDX2 is a 12-bit, 1 LSb DAC. The devices offer two memory options: MCP47CVDX2/MCP48CVDX2 devices have volatile memory, while the MCP47CMDX2/MCP48CMDX2 have 32-times programmable nonvolatile memory (MTP).The devices operate from a single-supply voltage of 2.7V to 5.5V for full specified operation and 1.8V to 5.5V for digital operation.

The devices populated on the 1LSb INL Dual DAC Evaluation Board are the nonvolatile I^2C DAC (MCP47CMD22) and the nonvolatile SPI DAC (MCP48CMD22).

1.2 1LSB INL DUAL DAC EVALUATION BOARD OVERVIEW

The Microchip 1LSb INL Dual DAC Evaluation Board is used to evaluate the MCP47CXDX2 and MCP48CXDX2 DAC families. Users can now easily evaluate features of the MCP47CXDX2/MCP48CXDX2 devices by connecting the evaluation board to any of the Microchip Curiosity microcontroller development boards. The 1LSb INL Dual DAC Evaluation Board supports the mikroBUS™ click board™ and can be mounted on any of the mikroBUS supported MCU boards. The 1LSb INL Dual DAC Evaluation Board supports both the I^2C family (MCP47CXDX2) of devices and the SPI DAC family (MCP48CXDX2).

Figure 1-1 shows the top view of the 1LSb INL Dual DAC Evaluation Board. Figure 1-2 shows the bottom view of the board.

© 2023 Microchip Technology Inc. and its subsidiaries

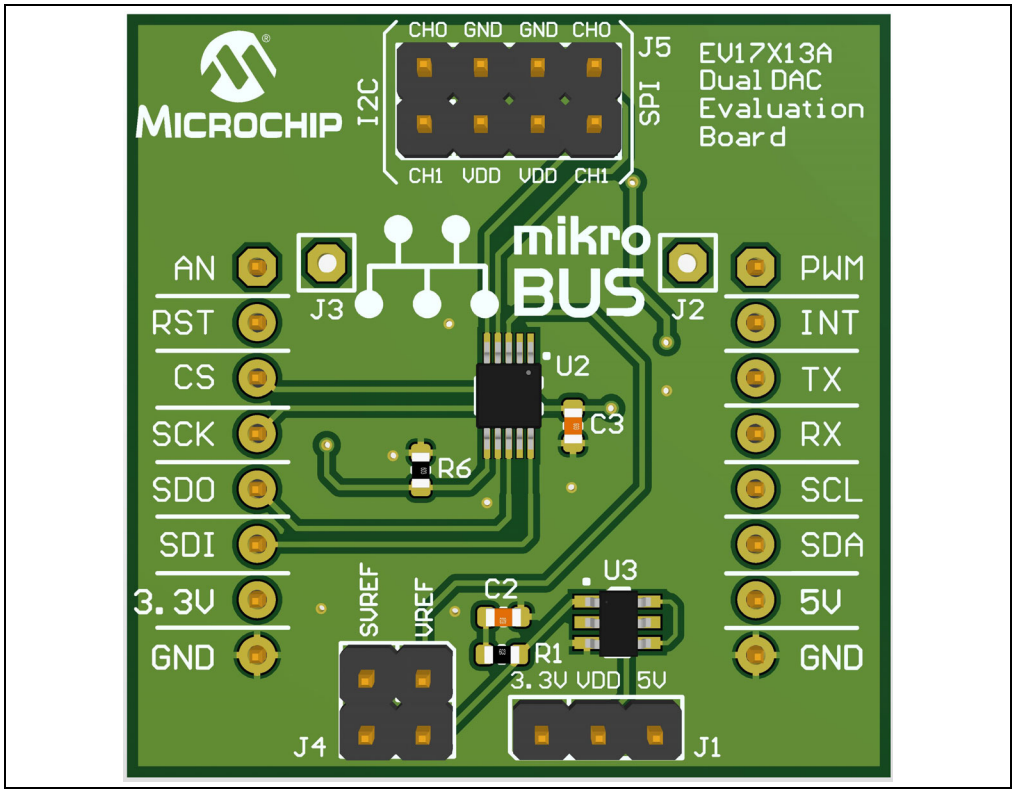

FIGURE 1-1: *1LSb INL Dual DAC Evaluation Board (Top View).*

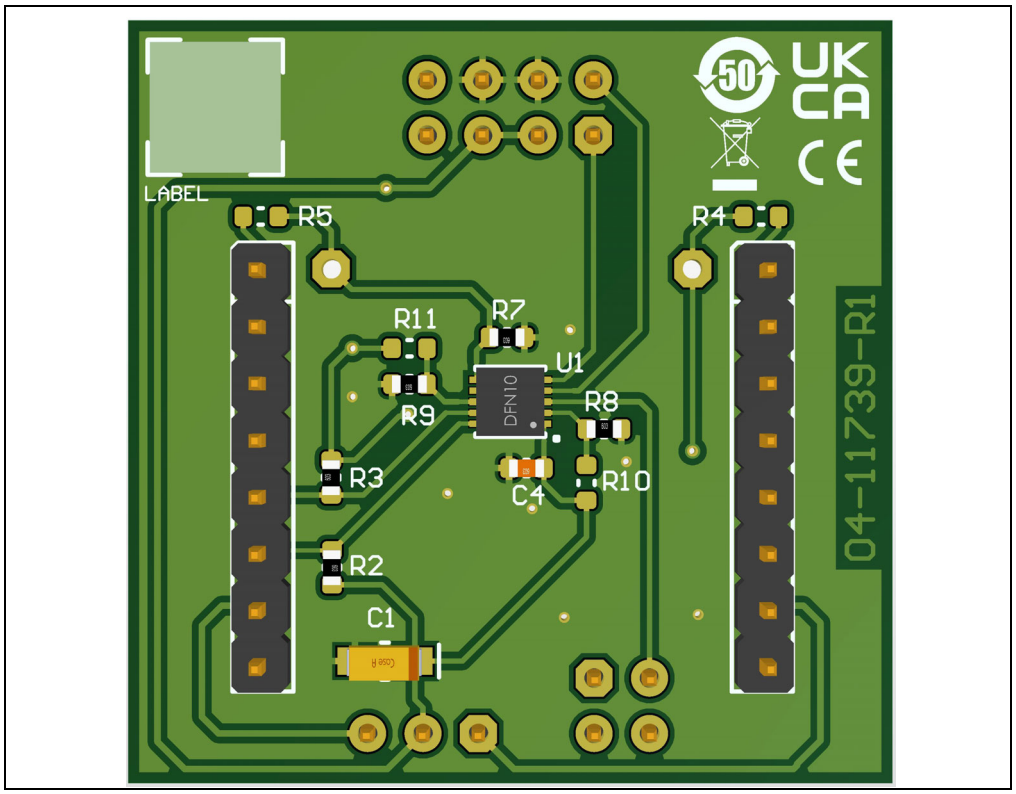

FIGURE 1-2: *1LSb INL Dual DAC Evaluation Board (Bottom View).*

© 2023 Microchip Technology Inc. and its subsidiaries

Figure 1-3 shows the 1LSb INL Dual DAC Evaluation Board mounted on the Curiosity microcontroller board, using the mikroBUS™ connector.

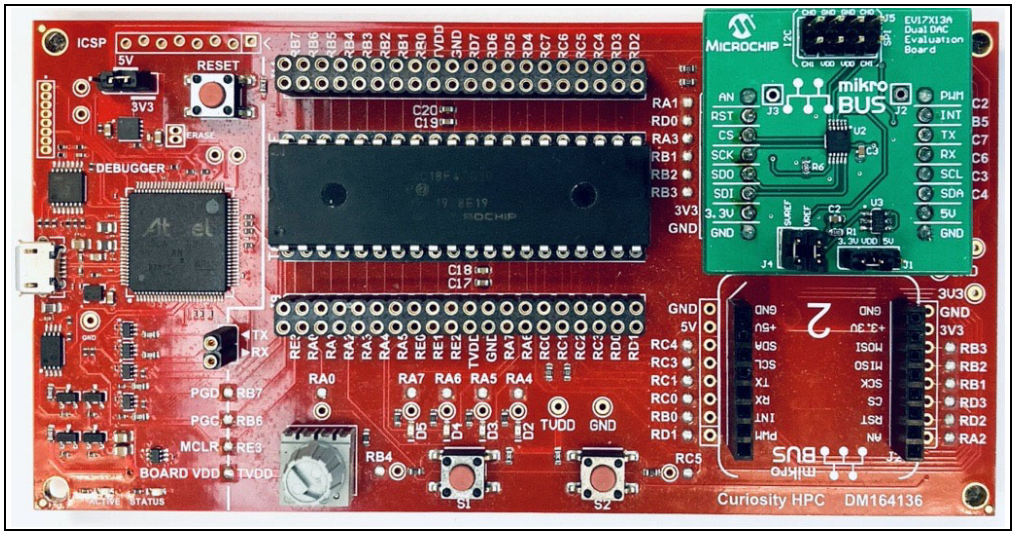

FIGURE 1-3: *1LSb INL Dual DAC Evaluation Board Mounted on the mikrobus™ Click Board™ of the Curiosity HPC Development Board (DM164136).*

1.3 1LSB INL DUAL DAC EVALUATION BOARD FEATURES

The 1LSb INL Dual DAC Evaluation Board is a fully-assembled board. The board can be mounted on any of the Microchip MCU boards that feature the mikroBUS connector (MCU board not included with this board). The MCU board can be programmed to evaluate and demonstrate the operating performance of the MCP47CXDX2 and MCP48CXDX2 DAC family.

The product page provides the code required to communicate with the MCP47CXDX2 and MCP48CXDX2 DAC family and is intended for use with the Microchip Curiosity HPC Development Board (DM164136).

The 1LSb INL Dual DAC Evaluation Board has the following features:

- Supports both SPI and I^2C devices
- Supports 5V and 3.3V options
- mikroBUS support makes it easy to evaluate with any of the Microchip MCU boards
- External voltage reference option for the DAC
- MCP1501-25 on-board voltage reference for external V_{REF} option.

1.4 1LSB INL DUAL DAC EVALUATION BOARD KIT CONTENTS

The 1LSb INL Dual DAC Evaluation Board includes the following items:

- 1LSb INL Dual DAC Evaluation Board (EV17X13A).

NOTES:

© 2023 Microchip Technology Inc. and its subsidiaries

Chapter 2. Installation and Operation

2.1 GETTING STARTED

The 1LSb INL Dual DAC Evaluation Board can be used by following the three steps listed below.

> **Note:** The code provided on the product page enables use of the 1LSb INL Dual DAC Evaluation Board with the Curiosity HPC Development Board (DM164136). Once the Curiosity HPC board has been programmed with this code, the DAC's output can be monitored on the V_{OUT} pin using an oscilloscope.

Step 1. Connect the 1LSb INL Dual DAC Evaluation Board to the top-right mikroBUS header on the Curiosity HPC Board, as shown in Figure 1-3.

Step 2. Compile the code provided on the product page and program the on-board PIC18F47Q10 microcontroller. Steps to compile and program are explained below.

> **Note:** Download and install MPLAB® IDE and XC18 compiler from www.microchip.com.

2a) Open MPLAB IDE, go to the File menu and select "New Project...".

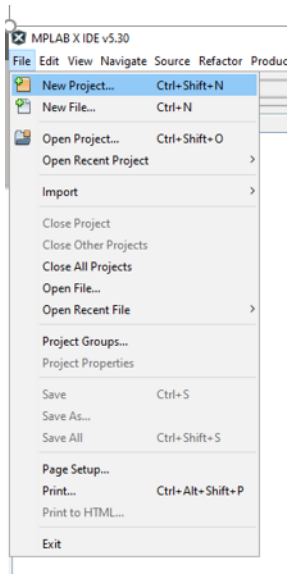

FIGURE 2-1: *Start a New Project in the MPLAB IDE.*

2b) Select "Standalone Project" and click **Next**.

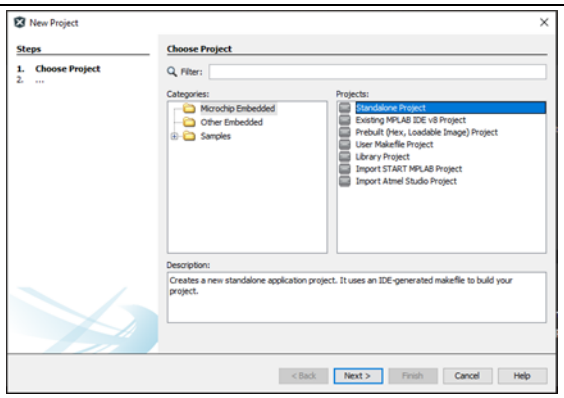

FIGURE 2-2: *Select Standalone Project.*

2c) Select PIC18F47Q10 as the device and click **Next**.

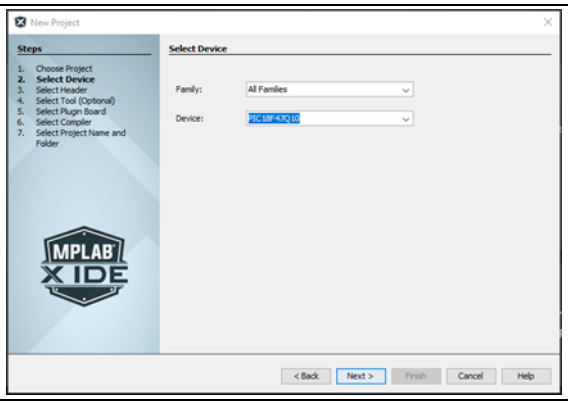

FIGURE 2-3: *Select the Device.*

2d) From the "Select Tool" menu, choose "Curiosity/Starter Kits (PKOB4)" and click **Next**.

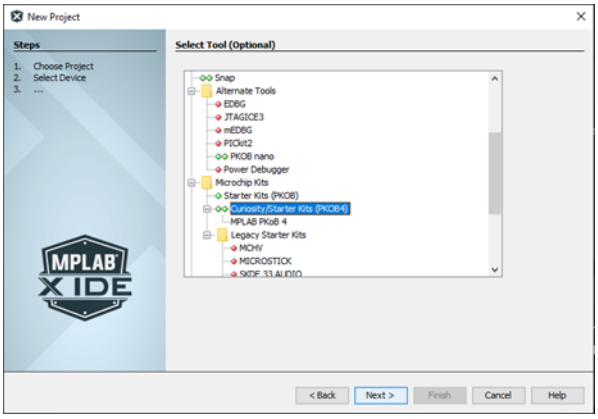

FIGURE 2-4: *Select the Tool.*

© 2023 Microchip Technology Inc. and its subsidiaries

2e) Select XC8 as the Compiler and click **Next**.

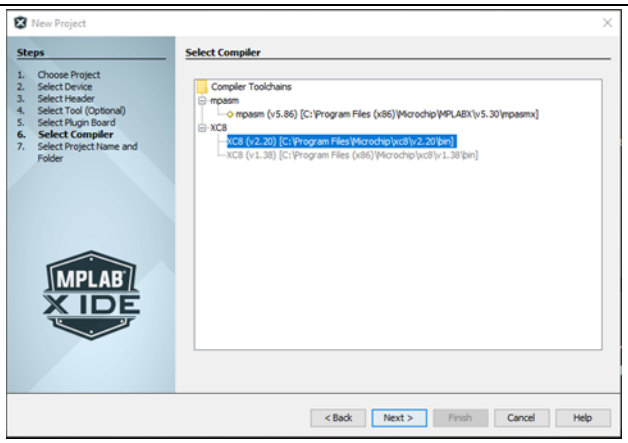

FIGURE 2-5: *Select the Compiler.*

2f) Name the project, provide the project location and click **Finish**.

2g) From the File menu, select “New File...”.

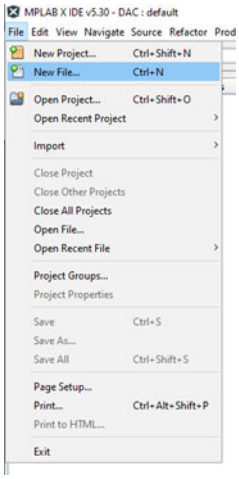

FIGURE 2-6: *New File.*

2h) From Categories, select "C" and, from File Types, select "C Source File" and click **Next**.

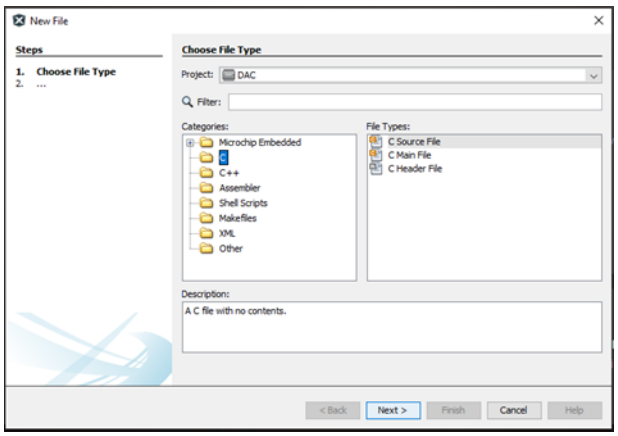

FIGURE 2-7: *New File.*

2i) Name the file ("DAC_SAMPLE" in the example shown in Figure j) and click **Finish**.

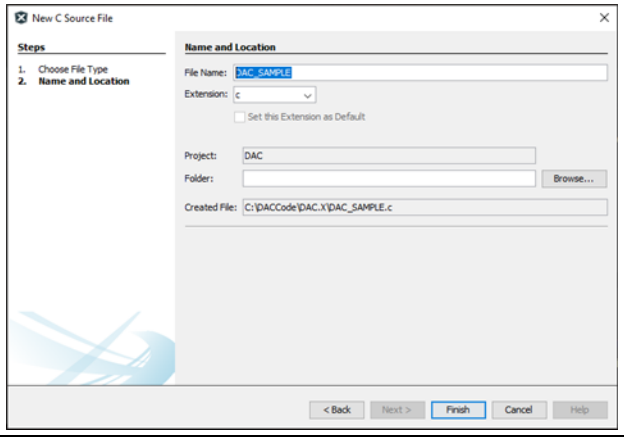

FIGURE 2-8: *Name the File.*

2j) From the file, right click Source File and select "Add Existing Item...".

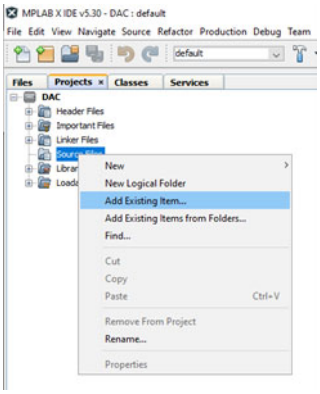

FIGURE 2-9: *Add a Source File.*

© 2023 Microchip Technology Inc. and its subsidiaries

2k) Navigate to the project folder, then select the `DAC_SAMPLE.c` file and click the **Select** button.

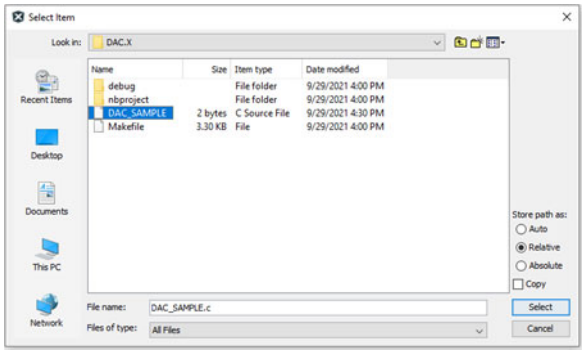

FIGURE 2-10: *Add a Source File.*

2l) This will add the code contained within the `DAC_SAMPLE.c` file to the source code, as shown in Figure 2-11.

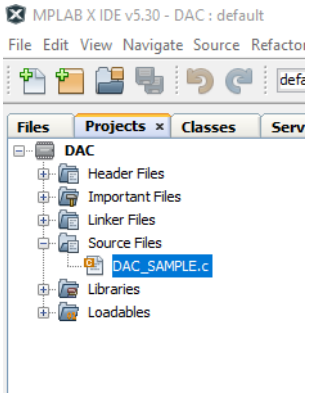

FIGURE 2-11: *Add a Source File.*

2m) Copy and paste the code to the `DAC_SAMPLE.c` file (make sure the code and comments are copied correctly). Connect the micro-USB cable to the micro-USB header on the left side of the Curiosity HPC Board using a micro-USB cable to provide power to the board. Press the icon shown in Figure 2-12 to compile and program the code.

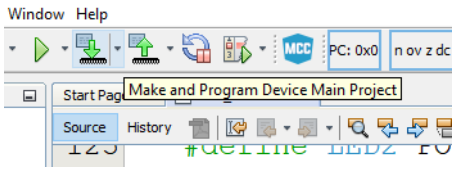

FIGURE 2-12: *Compile and Program the Code.*

Step 3. The LEDs on the Curiosity HPC Board will blink based on which code is running, and the user can monitor the DAC's output using the V_{OUT} pin (see Figure 2-13 and Figure 2-14).

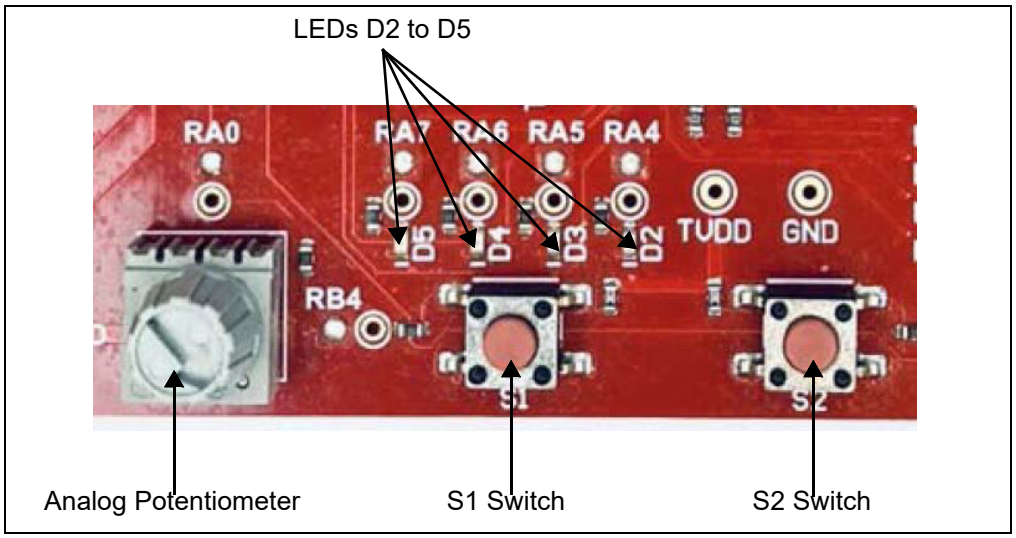

FIGURE 2-13: *The LEDs, Switches and the Analog Potentiometer of the Curiosity HPC Board Used for the 1LSb INL Dual DAC Evaluation Board Demo.*

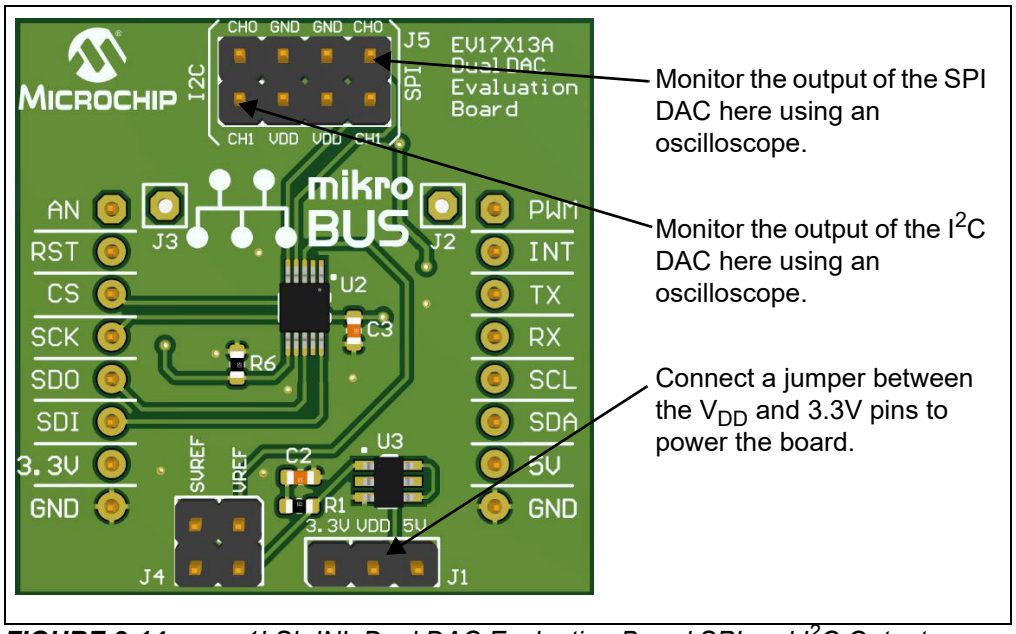

FIGURE 2-14: *1LSb INL Dual DAC Evaluation Board SPI and I^2C Output Waveform Monitoring.*

© 2023 Microchip Technology Inc. and its subsidiaries

2.2 SPI DEMO

Once the Curiosity board is programmed and running, LED D4 will blink, while the other LEDs will remain off. This indicates that the SPI DAC is working and the output can be monitored on CH0 of the SPI output. When LED D4 is blinking, Channel 0 will output a sine wave as shown in Figure 2-15.

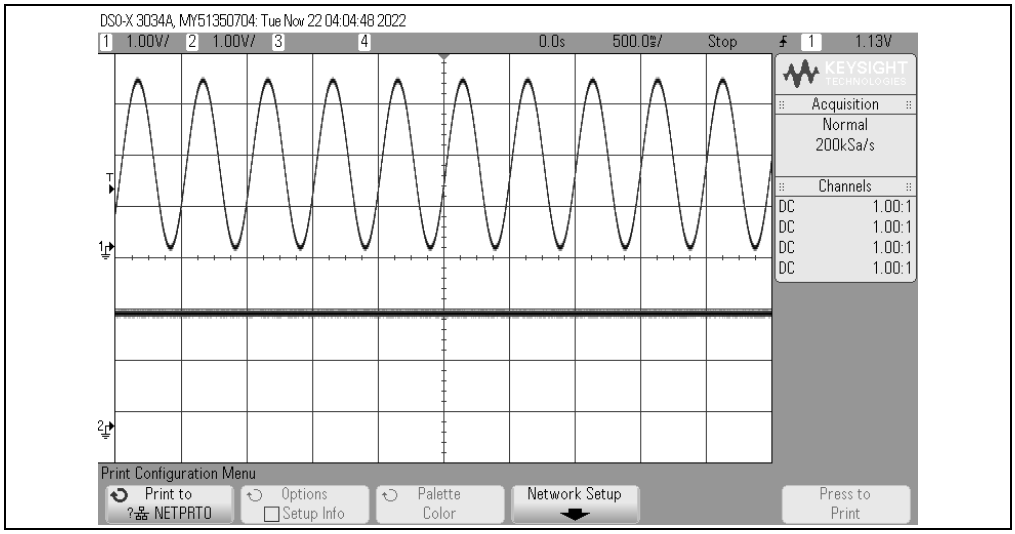

FIGURE 2-15: *SPI Output Sine Wave (LED D4 Blinking, LEDs D2, D3 and D5 OFF, Channel 1 - SPI, Channel 2 - I^2C).*

The frequency of the sine wave can be modified by rotating the potentiometer on the Curiosity board, as shown in Figure 2-16. Rotating the potentiometer will also change the blink rate of LED D4.

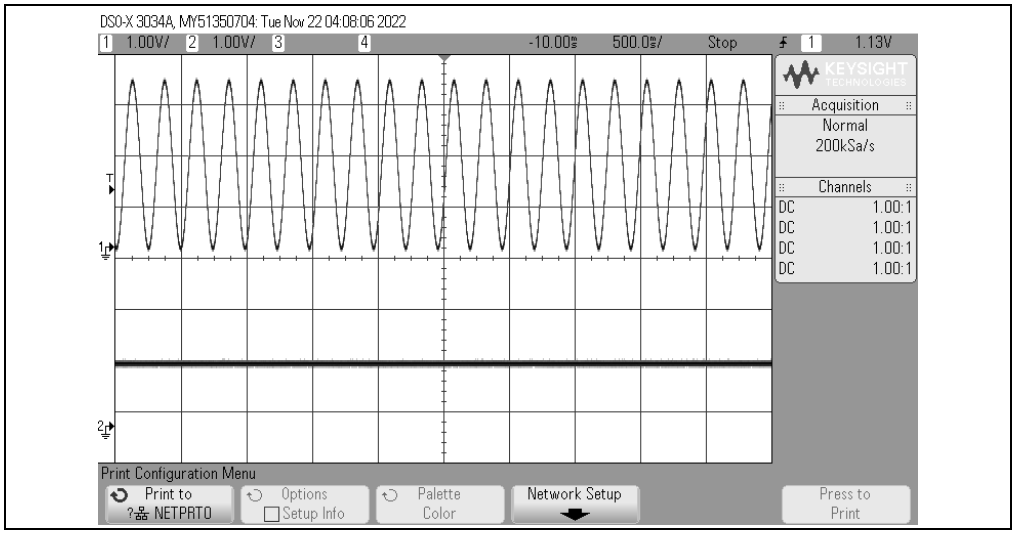

FIGURE 2-16: *SPI Output Sine Wave with Varying Frequency using the Potentiometer (LED D4 Blinking, LEDs D2, D3 and D5 OFF, Channel 1 - SPI, Channel 2 - I^2C).*

When the S1 switch is pressed, the SPI output waveform will be a saw-tooth shape, as shown in Figure 2-17. LED D5 will blink, while LEDs D2, D3 and D4 will be off. This indicates SPI DAC is working and the output can be monitored on CH0 of the SPI output. The frequency of the waveform can be modified using the potentiometer on the curiosity board (see Figure 2-18).

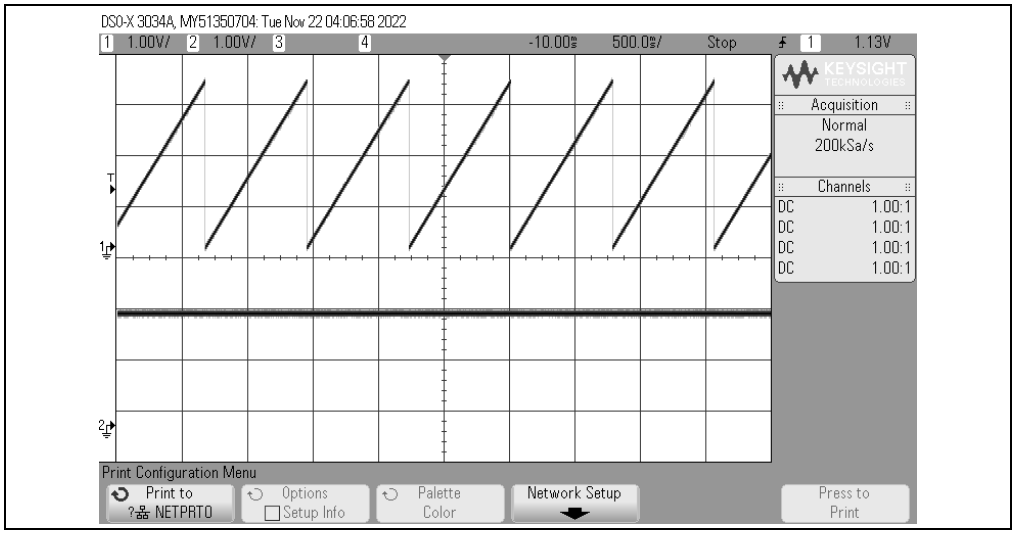

FIGURE 2-17: *SPI Output Saw-Tooth Waveform (S1 Switch Pressed, LED D5 Blinking, LEDs D2, D3 and D4 OFF, Channel 1 - SPI, Channel 2 - I^2C).*

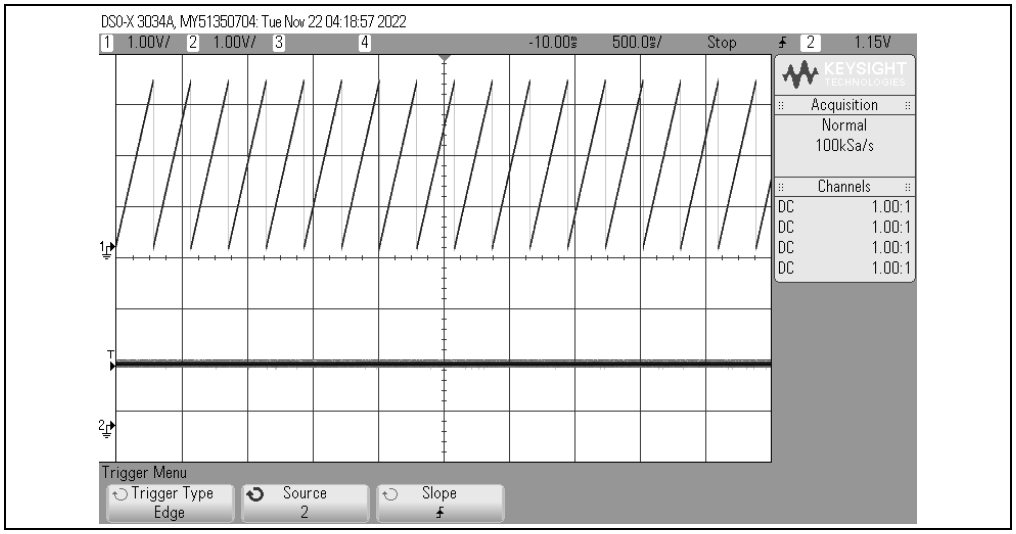

FIGURE 2-18: *I^2C Output Saw-Tooth Wave with Varying Frequency using the Potentiometer (S1 Switch Pressed, LED D5 blinking, LEDs D2, D3 and D4 OFF, Channel 1 - SPI, Channel 2 - I^2C).*

© 2023 Microchip Technology Inc. and its subsidiaries

2.3 I²C DEMO

Once the Curiosity board is programmed and running, press the S2 switch. The D2 LED will blink while all the other LEDs will remain off. This indicates that the I²C DAC is working and the output can be monitored on CH0 of the I²C DAC output. When LED D2 is blinking, the DAC's Channel 0 will output a sine wave as shown in Figure 2-19. The frequency of the sine wave can be varied using the analog potentiometer.

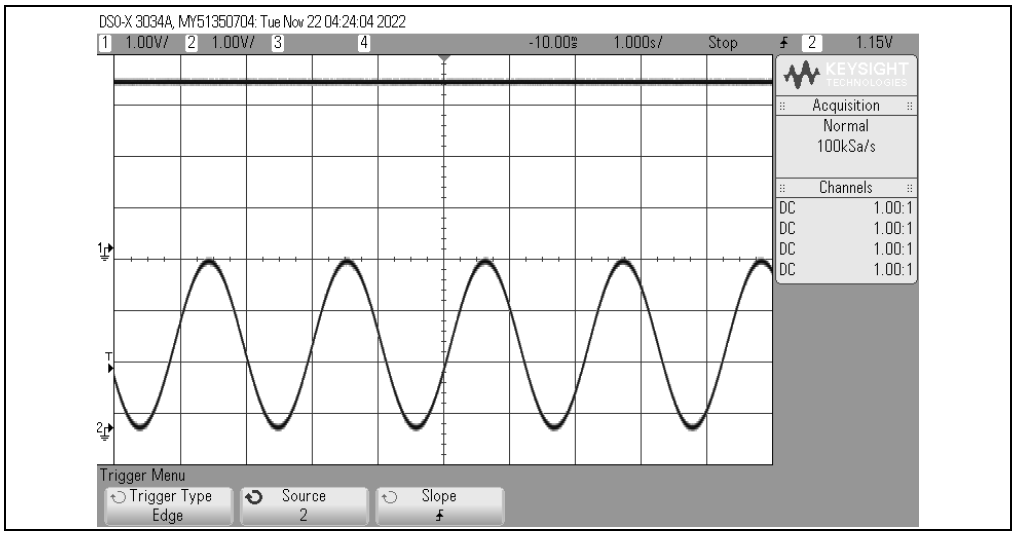

FIGURE 2-19: *I²C Output Sine Wave (LED D2 blinking, LEDs D3, D4 and D5 OFF, Channel 1 - SPI, Channel 2 - I²C).*

When the S2 switch is pressed, the I²C output waveform will be saw-tooth shaped. The D3 LED will blink while all the other LEDs will remain off. This indicates that the I²C DAC is working, and the output can be monitored on Channel 0 of the I²C DAC output. CH0 will output a saw-tooth waveform as shown in Figure 2-20. The frequency of the waveform can be modified using the potentiometer on the Curiosity board.

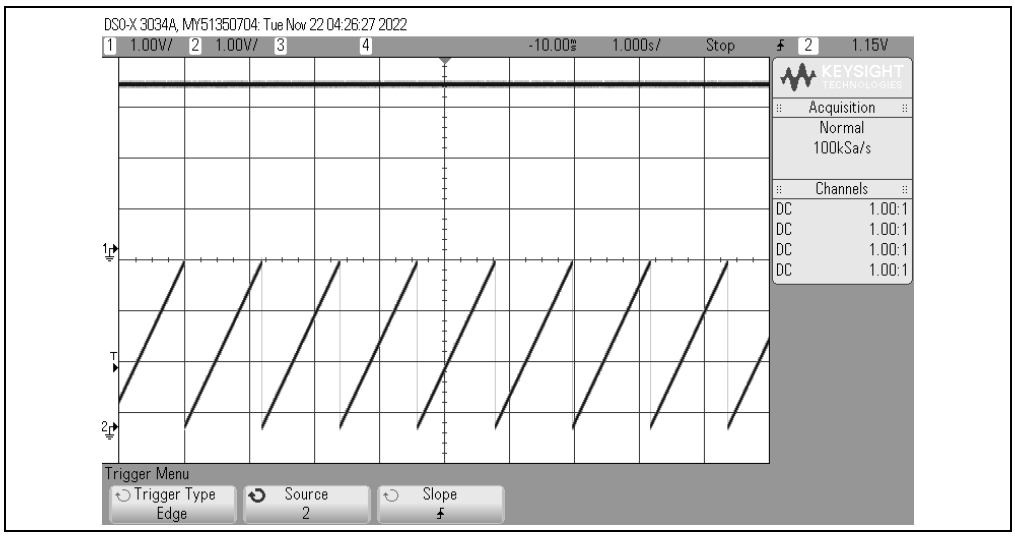

FIGURE 2-20: *I²C Output Saw-Tooth Waveform (LED D3 blinking, LEDs D2, D4 and D5 OFF, Channel 1 - SPI, Channel 2 - I²C).*

Figure 2-21 shows a flow-chart for the DAC demo.

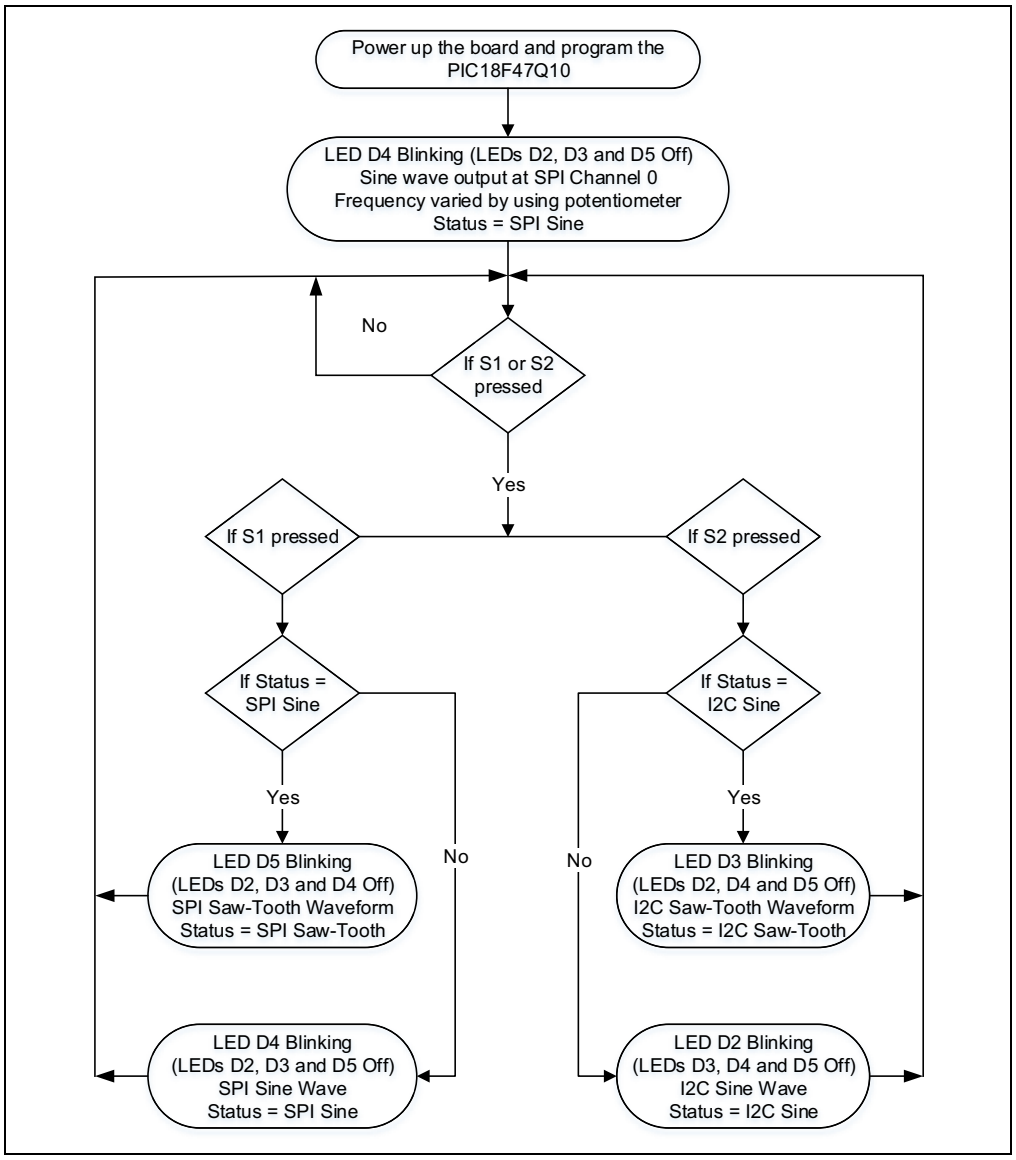

FIGURE 2-21: *Flowchart for the User Demo.*

© 2023 Microchip Technology Inc. and its subsidiaries

Chapter 3. Code

3.1 CODE

Program the PIC18F47Q10 on the Curiosity board with the code provided "DAC_SAMPLE.C" (https://www.microchip.com/en-us/product/MCP48CMD22) on the product page, in order to enable use of the connected 1LSb INL Dual DAC Evaluation Board. This will allow for monitoring and testing the DAC.

© 2023 Microchip Technology Inc. and its subsidiaries

NOTES:

© 2023 Microchip Technology Inc. and its subsidiaries

Appendix A. Schematics

A.1 INTRODUCTION

This appendix contains the following schematics and layouts for the 1LSb INL Dual DAC Evaluation Board - EV17X13A:

- Board – Schematics
- Board – Top Assembly Drawing
- Board – Bottom Assembly Drawing

© 2023 Microchip Technology Inc. and its subsidiaries

A.2 BOARD – SCHEMATICS

VDD=5V/3.3V
VSS=GND

Power Supply

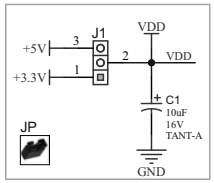

HVC

Compatible with I2C

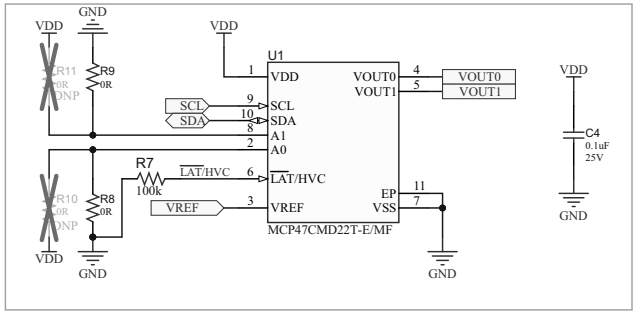

MikroBUS Connector

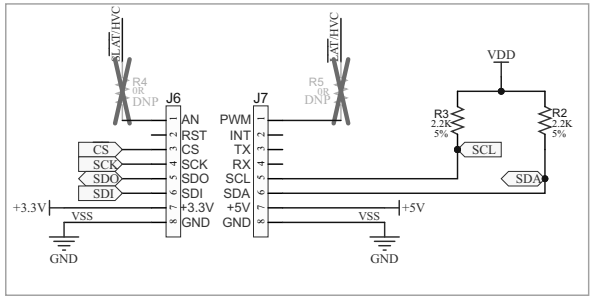

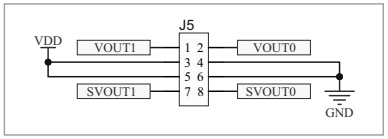

VREF Circuit

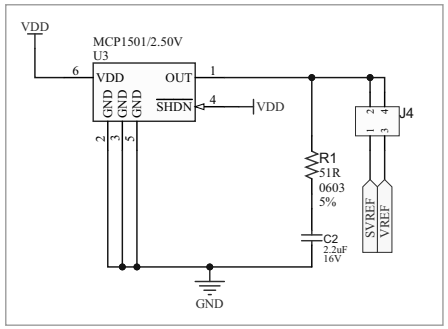

Compatible with SPI

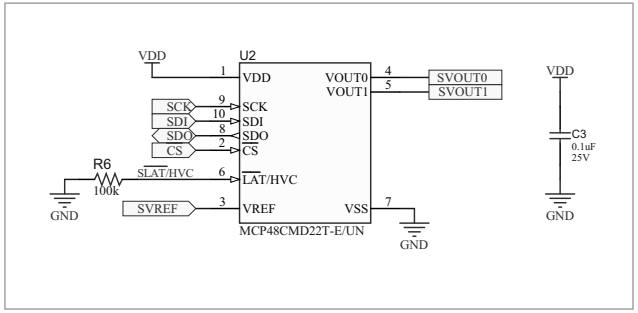

© 2023 Microchip Technology Inc. and its subsidiaries

A.3 BOARD – TOP ASSEMBLY DRAWING

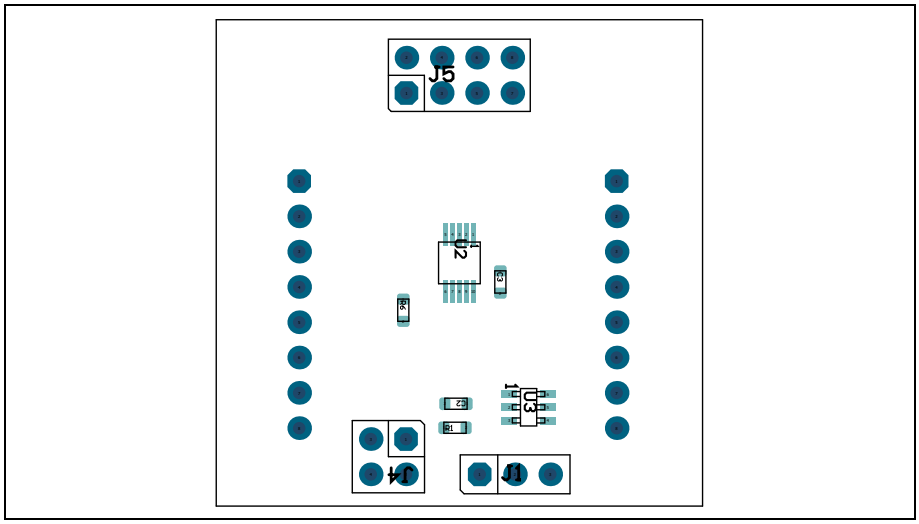

A.4 BOARD – BOTTOM ASSEMBLY DRAWING

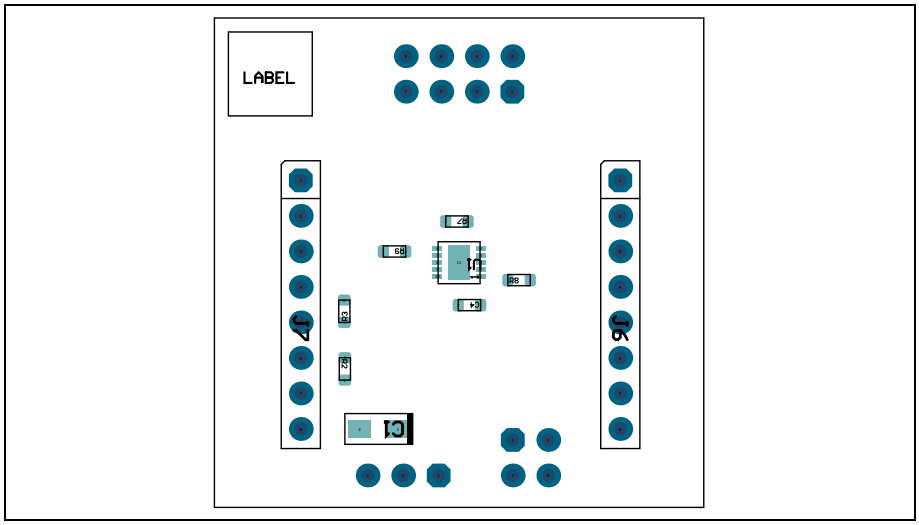

NOTES:

© 2023 Microchip Technology Inc. and its subsidiaries

Appendix B. Bill of Materials (BOM)

TABLE B-1: BILL OF MATERIALS (BOM)

Qty.	Reference	Description	Manufacturer	Part Number
1	C1	Capacitor, tantalum, 10 µF, 16V, 10%, 3Ω, SMD A	KEMET	B45196H3106K109
1	C2	Capacitor, ceramic, 2.2 µF, 16V, 10%, X5R, SMD, 0603	TDK Corporation	C1608X5R1C225K
2	C3, C4	Capacitor, ceramic, 0.1 µF, 25V, 10%, X7R, SMD, 0603	Würth Elektronik	885012206071
1	J1	Connector, header-2.54, male, 1x3, gold, 5.84MH, through hole, vertical	FCI	68000-103HLF
0	J2, J3	Connector, header-2.54, male, 1x1, gold, 5.84MH, through hole, vertical – **Do Not Populate**	Samtec, Inc.	TSW-101-07-S-S
1	J4	Connector, header-2.54, male, 2x2, Gold, 5.84MH, through hole, vertical	Samtec, Inc.	HTSW-102-07-G-D
1	J5	Connector, header-2.54, male, 2x4, gold, 5.84MH TH VERT	Samtec, Inc.	TSW-104-08-L-D
2	J6, J7	Connector, header-2.54, male, 1x8, gold, 5.84MH, through hole	FCI	68001-108HLF
1	JP	Mechanical, hardware, jumper, 2.54 mm, 1x2 handle, gold – mechanical part	TE Connectivity, Ltd.	881545-2
1	LABEL	Label, PCBA, 6x6 mm, Datamatrix	ACT Logimark AS	505462
1	PCB1	Printed Circuit Board – 1LSb INL Dual DAC Evaluation Board	Microchip Technology Inc.	04-11739-R1
1	R1	Resistor, TKF, 51R, 5%, 1/10W, surface mount, 0603	Panasonic® – ECG	ERJ-3GEYJ510V
2	R2, R3	Resistor, TKF, 2.2 kΩ, 5%, 1/10W, surface mount, 0603	Panasonic – ECG	ERJ-3GEYJ222V
0	R4, R5, R10, R11	Resistor, TKF, 0R, 1/10W, surface mount, 0603 – **Do Not Populate**	Panasonic – ECG	ERJ-3GSY0R00V
2	R6, R7	Resistor, TKF, 100 kΩ, 5%, 1/10W, surface mount, 0603	Panasonic – ECG	ERJ-3GEYJ104V
2	R8, R9	Resistor, TKF, 0R, 1/10W, surface mount, 0603	Panasonic – ECG	ERJ-3GSY0R00V
1	U1	Microchip, Analog, DAC, 2-Channel, 12-bit, MCP47CMD22T-E/MF, DFN-10	Microchip Technology Inc.	**MCP47CMD22T-E/MF**
1	U2	Microchip, Analog, DAC, 2-Channel, 12-bit, MCP48CMD22T-E/UN, MSOP-10	Microchip Technology Inc.	**MCP48CMD22T-E/UN**
1	U3	Microchip, Analog, VREF, 2.50V, MCP1501T-25E/CHY, SOT-23-6	Microchip Technology Inc.	**MCP1501T-25E/CHY**

© 2023 Microchip Technology Inc. and its subsidiaries

NOTES:

© 2023 Microchip Technology Inc. and its subsidiaries

Worldwide Sales and Service

AMERICAS

Corporate Office
2355 West Chandler Blvd.
Chandler, AZ 85224-6199
Tel: 480-792-7200
Fax: 480-792-7277
Technical Support:
http://www.microchip.com/support
Web Address:
www.microchip.com

Atlanta
Duluth, GA
Tel: 678-957-9614
Fax: 678-957-1455

Austin, TX
Tel: 512-257-3370

Boston
Westborough, MA
Tel: 774-760-0087
Fax: 774-760-0088

Chicago
Itasca, IL
Tel: 630-285-0071
Fax: 630-285-0075

Dallas
Addison, TX
Tel: 972-818-7423
Fax: 972-818-2924

Detroit
Novi, MI
Tel: 248-848-4000

Houston, TX
Tel: 281-894-5983

Indianapolis
Noblesville, IN
Tel: 317-773-8323
Fax: 317-773-5453
Tel: 317-536-2380

Los Angeles
Mission Viejo, CA
Tel: 949-462-9523
Fax: 949-462-9608
Tel: 951-273-7800

Raleigh, NC
Tel: 919-844-7510

New York, NY
Tel: 631-435-6000

San Jose, CA
Tel: 408-735-9110
Tel: 408-436-4270

Canada - Toronto
Tel: 905-695-1980
Fax: 905-695-2078

ASIA/PACIFIC

Australia - Sydney
Tel: 61-2-9868-6733

China - Beijing
Tel: 86-10-8569-7000

China - Chengdu
Tel: 86-28-8665-5511

China - Chongqing
Tel: 86-23-8980-9588

China - Dongguan
Tel: 86-769-8702-9880

China - Guangzhou
Tel: 86-20-8755-8029

China - Hangzhou
Tel: 86-571-8792-8115

China - Hong Kong SAR
Tel: 852-2943-5100

China - Nanjing
Tel: 86-25-8473-2460

China - Qingdao
Tel: 86-532-8502-7355

China - Shanghai
Tel: 86-21-3326-8000

China - Shenyang
Tel: 86-24-2334-2829

China - Shenzhen
Tel: 86-755-8864-2200

China - Suzhou
Tel: 86-186-6233-1526

China - Wuhan
Tel: 86-27-5980-5300

China - Xian
Tel: 86-29-8833-7252

China - Xiamen
Tel: 86-592-2388138

China - Zhuhai
Tel: 86-756-3210040

ASIA/PACIFIC

India - Bangalore
Tel: 91-80-3090-4444

India - New Delhi
Tel: 91-11-4160-8631

India - Pune
Tel: 91-20-4121-0141

Japan - Osaka
Tel: 81-6-6152-7160

Japan - Tokyo
Tel: 81-3-6880- 3770

Korea - Daegu
Tel: 82-53-744-4301

Korea - Seoul
Tel: 82-2-554-7200

Malaysia - Kuala Lumpur
Tel: 60-3-7651-7906

Malaysia - Penang
Tel: 60-4-227-8870

Philippines - Manila
Tel: 63-2-634-9065

Singapore
Tel: 65-6334-8870

Taiwan - Hsin Chu
Tel: 886-3-577-8366

Taiwan - Kaohsiung
Tel: 886-7-213-7830

Taiwan - Taipei
Tel: 886-2-2508-8600

Thailand - Bangkok
Tel: 66-2-694-1351

Vietnam - Ho Chi Minh
Tel: 84-28-5448-2100

EUROPE

Austria - Wels
Tel: 43-7242-2244-39
Fax: 43-7242-2244-393

Denmark - Copenhagen
Tel: 45-4485-5910
Fax: 45-4485-2829

Finland - Espoo
Tel: 358-9-4520-820

France - Paris
Tel: 33-1-69-53-63-20
Fax: 33-1-69-30-90-79

Germany - Garching
Tel: 49-8931-9700

Germany - Haan
Tel: 49-2129-3766400

Germany - Heilbronn
Tel: 49-7131-72400

Germany - Karlsruhe
Tel: 49-721-625370

Germany - Munich
Tel: 49-89-627-144-0
Fax: 49-89-627-144-44

Germany - Rosenheim
Tel: 49-8031-354-560

Israel - Ra'anana
Tel: 972-9-744-7705

Italy - Milan
Tel: 39-0331-742611
Fax: 39-0331-466781

Italy - Padova
Tel: 39-049-7625286

Netherlands - Drunen
Tel: 31-416-690399
Fax: 31-416-690340

Norway - Trondheim
Tel: 47-7288-4388

Poland - Warsaw
Tel: 48-22-3325737

Romania - Bucharest
Tel: 40-21-407-87-50

Spain - Madrid
Tel: 34-91-708-08-90
Fax: 34-91-708-08-91

Sweden - Gothenberg
Tel: 46-31-704-60-40

Sweden - Stockholm
Tel: 46-8-5090-4654

UK - Wokingham
Tel: 44-118-921-5800
Fax: 44-118-921-5820

© 2023 Microchip Technology Inc. and its subsidiaries