THIS DRAWING IS THE EXCLUSIVE PROPERTY OF MARQUARDT. WITHOUT THEIR CONSENT IT MAY NOT BE REPRODUCED OR GIVEN TO THIRD PARTIES.
CONFIDENTIAL
VERTRAULICH

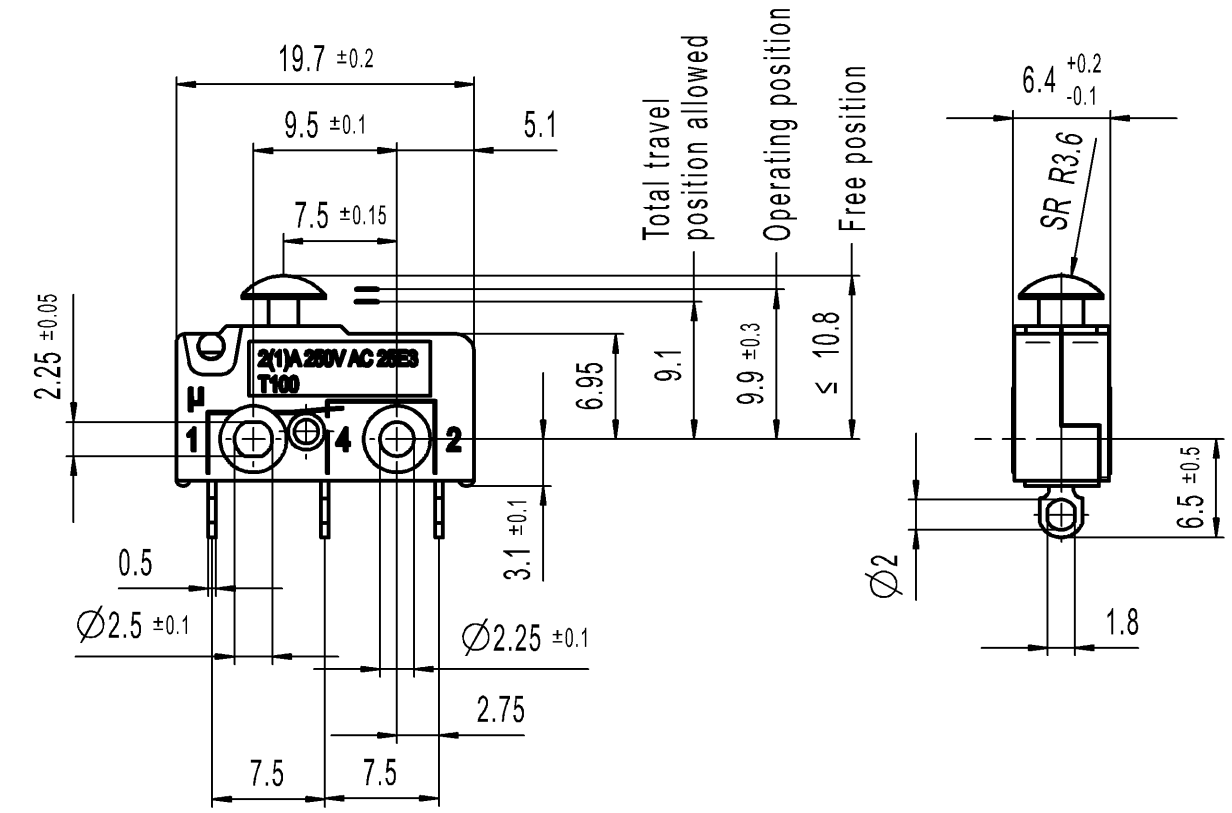

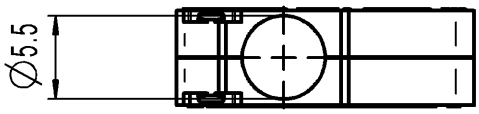

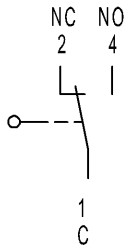

Marking

1050 μ

2(1)A 250V AC 25E3
T100

Single Pole Changeover

Actuating force	≤ 1.5 N
Release force	≥ 0.5 N
Movement differential	≤ 0.2 mm

Contacts gold plated

Code of manufacture:
place /year / week

1:1

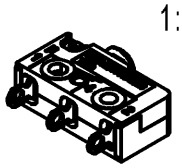

Figure	Type	Customer Part No.	Art.No.-PI
-	-	-	1050.0251-XX

Shape and location	Angle ± 2 °	Length			Radii	
	Edge tolerance	0-6	± 0.2	±	0-6	± 0.2
		>6-30	± 0.3	±	>6-30	± 0.3
			±	±		±
			±	±		±
			±	±		±
			±	±		±
			±	±		±
			±	±		±

Index	MEC-No.	Date (YYYY-MM-DD)	Edited by
d	141307	2022-03-16	HHE
c	38135	2003-09-12	SIG
b	30390	2000-10-12	PFU
a	29543	2000-05-05	PFU

Sheet 01

Format DIN A4 | Projection | Scale 1:1

All dimensions are in millimetres

System NX V1899

Replacement of Zg.gl.Nr.v.23.05.1995

Ident.	Document number	Index
K	10500251	d

Snap Action Switch

MARQUARDT

Alle Rechte bei Marquardt, auch fuer den Fall von Schutzrechtsanmeldungen. Jede Verfuegungsbefugnis, wie Kopier- und Weitergaberecht, bei uns.