YASMEEN-50-ZOOM

Infinitely adjustable beam from 15 to 45 degrees

SPECIFICATION:

Dimensions	Ø 49.9
Height	29 mm
Fastening	socket
ROHS compliant	yes

MATERIALS:

Component	Type	Material	Colour	Finish	Length (mm)
YASMEEN-50-ZOOM	Single lens	PMMA			
YASMEEN-50-ZOOM-SUB	Sublens	PMMA			
YASMEEN-50-HLD2-C	Holder C	PC	black		
YASMEEN-50-HLD2-B	Holder B	PC	black		
YASMEEN-50-HLD2-C-WHT	Holder C	PC	white		
YASMEEN-50-HLD2-B-WHT	Holder B	PC	white		

LEDiL is a registered trademark of LEDiL Oy in the European Union, USA, and certain other countries.

ORDERING INFORMATION:

Component	Qty in box	MOQ	MPQ	Box weight (kg)
C17735_YASMEEN-50-ZOOM » Box size: 480 x 280 x 300 mm	252	112	28	8.4
C17769_YASMEEN-50-ZOOM-SUB » Box size: 480 x 280 x 165 mm	252	112	28	2.9
CP18749_YASMEEN-50-ZOOM-B2-WHT » Box size: 476 x 273 x 305 mm	252	112	28	10.1
CP18742_YASMEEN-50-ZOOM-C2-WHT » Box size: 476 x 273 x 305 mm	252	112	28	9.9
CP18735_YASMEEN-50-ZOOM-B2 » Box size: 476 x 273 x 305 mm	252	112	28	10.1
CP18728_YASMEEN-50-ZOOM-C2 » Box size: 476 x 273 x 305 mm	252	112	28	9.9

LEDiL is a registered trademark of LEDiL Oy in the European Union, USA, and certain other countries.

DATE
02.06.2023

CP18728_YASMEEN-50-ZOOM-C2
CP18742_YASMEEN-50-ZOOM-C2-WHT

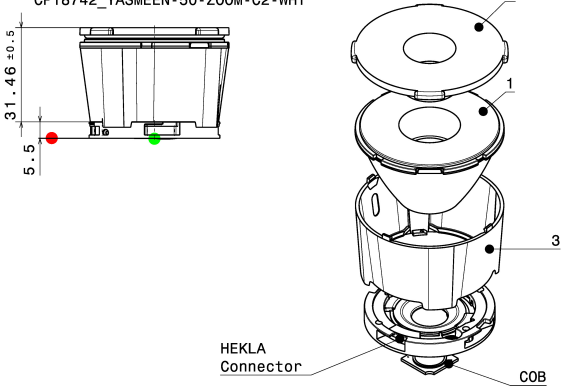

CP18735_YASMEEN-50-ZOOM-B2
CP18749_YASMEEN-50-ZOOM-B2-WHT

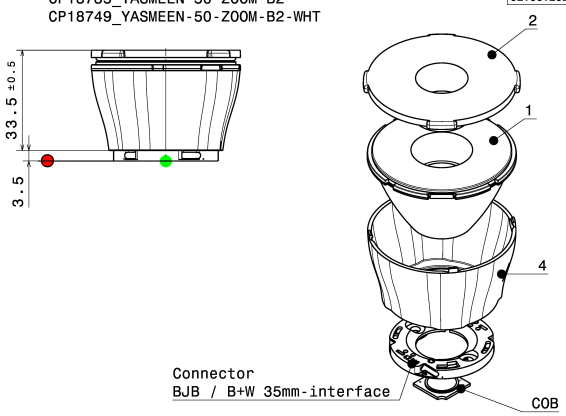

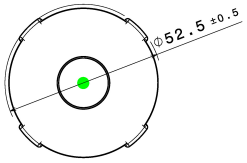

Top view
Scale: 1:1

INDEX	PART	TYPE	QTY	MATERIAL	COLOUR/COATING	ASSEMBLY CODES
1	C17735_YASMEEN-50-ZOOM	LENS	1	PMMA	CLEAR	
2	C17769_YASMEEN-50-ZOOM-SUB	SUBLENS	1	PMMA	CLEAR	
3	HOLDER C	HOLDER	1			
	C18691_YASMEEN-50-HLD2-C			PC	BLACK	CP18728_YASMEEN-50-ZOOM-C2
	C18715_YASMEEN-50-HLD2-C-WHT			PC	WHITE	CP18742_YASMEEN-50-ZOOM-C2-WHT
4	HOLDER B					
	C18694_YASMEEN-50-HLD2-B			PC	BLACK	CP18735_YASMEEN-50-ZOOM-B2
	C18716_YASMEEN-50-HLD2-B-WHT			PC	WHITE	CP18749_YASMEEN-50-ZOOM-B2-WHT

Notes

- PCB or heatsink level.
- LED location
- Ensure LED fitting from a product specific 3D model available from www.ledil.com
- For more details about installation please see LEDiL Installation Guide on www.ledil.com

MECHANICAL DRAWING

PRODUCT YASMEEN-50-ZOOM

LEDiL

Plastic moulding general tolerances according to DIN 16901-130 and applies if not otherwise shown in the drawing. Silicone moulding general tolerances according to ISO 3302-1 Class M3 and applies if not otherwise shown in the drawing.

FIRST ANGLE PROJECTION:

This drawing is the property of LEDiL Oy. It may not be copied or otherwise distributed without prior written permission from LEDiL Oy.

SCALE 1:1 | WEIGHT - | A3 | SHEET 1/4

BEAM ANGLE

Sublens rotate freely.
Beam angle changing smoothly.
Spot - Wide - Spot- Wide ....

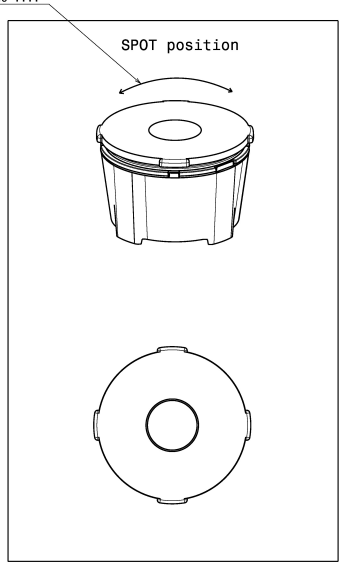

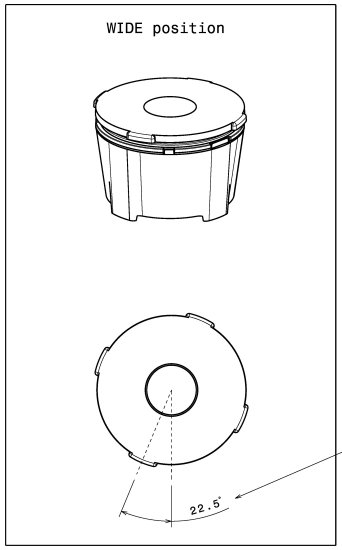

Sub lens rotation angle between spot to wide beam angle

Notes

- PCB or heatsink level.
- LED location
- Ensure LED fitting from a product specific 3D model available from www.ledil.com
- For more details about installation please see LEDiL Installation Guide on www.ledil.com

MECHANICAL DRAWING

PRODUCT YASMEEN-50-ZOOM

LEDiL

Plastic moulding general tolerances according to DIN 16901-130 and applies if not otherwise shown in the drawing. Silicone moulding general tolerances according to ISO 3302-1 Class M3 and applies if not otherwise shown in the drawing.

FIRST ANGLE PROJECTION:

This drawing is the property of LEDiL Oy. It may not be copied or otherwise distributed without prior written permission from LEDiL Oy.

SCALE 1:1 | WEIGHT - | A3 | SHEET 2/4

LEDiL is a registered trademark of LEDiL Oy in the European Union, USA, and certain other countries.

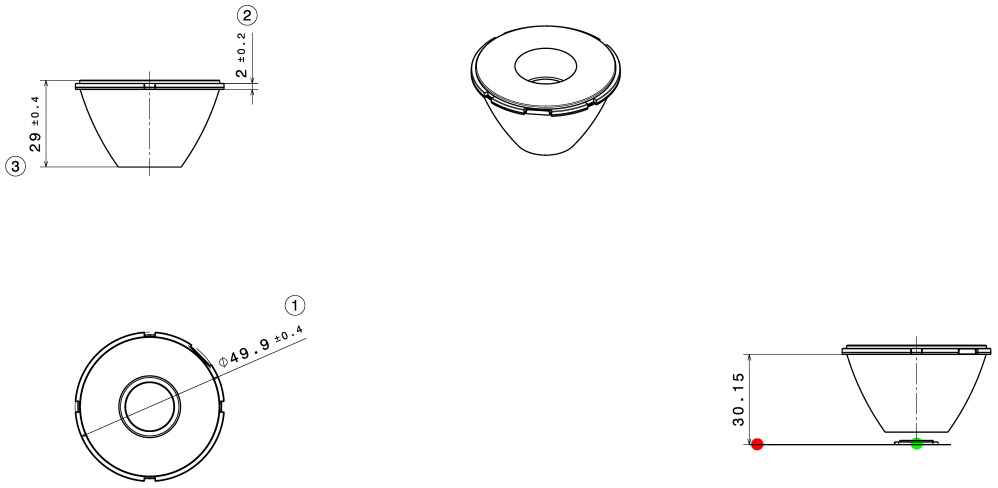

PART	TYPE	MATERIAL	COLOR / COATING
C17735_YASMEEN-50-ZOOM	LENS	PMMA	CLEAR

MECHANICAL DRAWING

PRODUCT YASMEEN-50-ZOOM

LEDiL

Plastic moulding general tolerances according to DIN 16901-130 and applies if not otherwise shown in the drawing. Silicone moulding general tolerances according to ISO 3302-1 Class M3 and applies if not otherwise shown in the drawing.

FIRST ANGLE PROJECTION:

This drawing is the property of LEDiL Oy. It may not be copied or otherwise distributed without prior written permission from LEDiL Oy.

SCALE 1:1 | WEIGHT - | A3 | SHEET 3/4

Notes

- PCB or heatsink level.
- LED location
- Ensure LED fitting from a product specific 3D model available from www.ledil.com
- For more details about installation please see LEDiL Installation Guide on www.ledil.com

DATE 02.06.2023

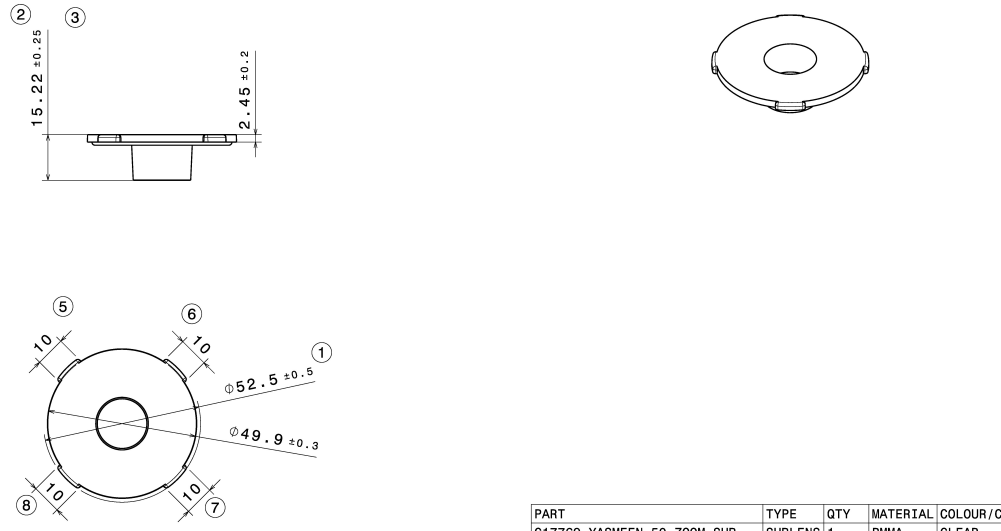

PART	TYPE	QTY	MATERIAL	COLOUR/COATING
C17769_YASMEEN-50-ZOOM-SUB	SUBLENS	1	PMMA	CLEAR

MECHANICAL DRAWING

PRODUCT YASMEEN-50-ZOOM

LEDiL

Plastic moulding general tolerances according to DIN 16901-130 and applies if not otherwise shown in the drawing. Silicone moulding general tolerances according to ISO 3302-1 Class M3 and applies if not otherwise shown in the drawing.

FIRST ANGLE PROJECTION:

This drawing is the property of LEDiL Oy. It may not be copied or otherwise distributed without prior written permission from LEDiL Oy.

SCALE 1:1 | WEIGHT - | A3 | SHEET 4/4

Notes

- PCB or heatsink level.
- LED location
- Ensure LED fitting from a product specific 3D model available from www.ledil.com
- For more details about installation please see LEDiL Installation Guide on www.ledil.com

See also our general installation guide: www.ledil.com/installation_guide

LEDiL is a registered trademark of LEDiL Oy in the European Union, USA, and certain other countries.

OPTICAL RESULTS (MEASURED):

CITIZEN

LED	CLU02Q-1204E1 Type-M
Ordering code	CN18729_YASMEEN-50-ZOOM-C2
FWHM / FWTM	20.0 + 44.0° / 41.0 + 76.0°
Efficiency	77 %
Peak intensity	4.2 cd/lm
LEDs/each optic	1
Light colour/type	White

Required components:

F17435_HEKLA-G2-C
C17769_YASMEEN-50-ZOOM-SUB

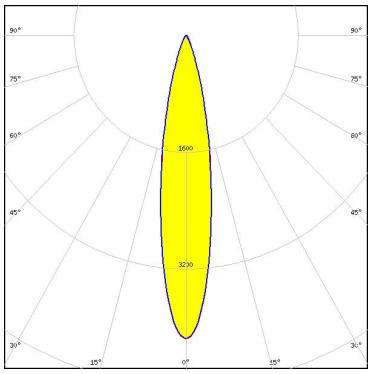

Light distribution files

LUMINUS

LED	CTM-14 (Tunable White) Gen2
Ordering code	CN18729_YASMEEN-50-ZOOM-C2
FWHM / FWTM	29.0 + 43.0° / 57.0 + 80.0°
Efficiency	72 %
Peak intensity	2.1 cd/lm
LEDs/each optic	1
Light colour/type	Tunable White

Required components:

C16142_HEKLA-SOCKET-K
C17769_YASMEEN-50-ZOOM-SUB
Bender Wirth: 442 Typ L8

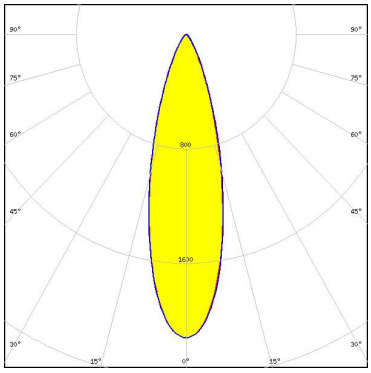

Light distribution files

LEDiL is a registered trademark of LEDiL Oy in the European Union, USA, and certain other countries.

OPTICAL RESULTS (SIMULATED):

bridgelux

LED	Vesta SE 13mm TW
Ordering code	CP18728_YASMEEN-50-ZOOM-C2
FWHM / FWTM	24.0 + 44.0° / 52.0 + 83.0°
Efficiency	72 %
Peak intensity	2.6 cd/lm
LEDs/each optic	1
Light colour/type	Tunable White
Required components:	
C16142_HEKLA-SOCKET-K	
C17769_YASMEEN-50-ZOOM-SUB	

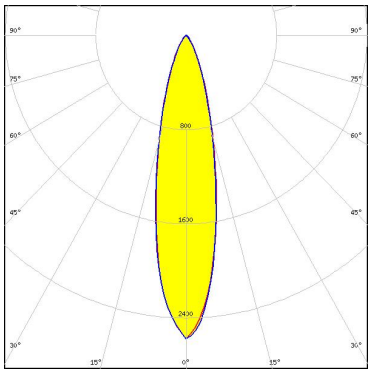

Light distribution files

CREE LEDs

LED	CMA1303
Ordering code	CP18735_YASMEEN-50-ZOOM-B2
FWHM / FWTM	13.0 + 45.0° / 26.0 + 70.0°
Efficiency	85 %
Peak intensity	11.1 cd/lm
LEDs/each optic	1
Light colour/type	White
Required components:	
C17769_YASMEEN-50-ZOOM-SUB	

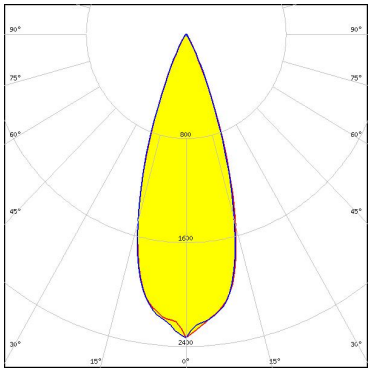

Light distribution files

Bender Wirth: 634c Bayonet35L

LUMILEDS

LED	LUXEON CoB 1208
Ordering code	CP18728_YASMEEN-50-ZOOM-C2
FWHM / FWTM	28.0 + 46.0° / 56.0 + 84.0°
Efficiency	78 %
Peak intensity	2.3 cd/lm
LEDs/each optic	1
Light colour/type	White
Required components:	

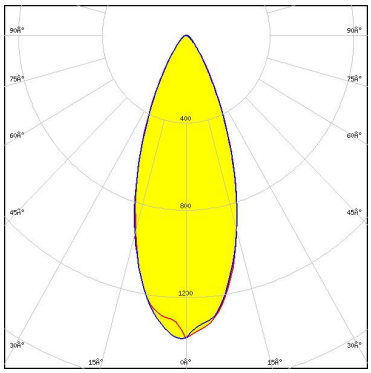

Light distribution files

Bender Wirth: 632a Hekla XL

LEDiL is a registered trademark of LEDiL Oy in the European Union, USA, and certain other countries.

OPTICAL RESULTS (SIMULATED):

PHILIPS

LED	Fortimo SLM L09 CoB
FWHM / FWTM	20.0 + 44.0° / 38.0 + 74.0°
Efficiency	81 %
Peak intensity	5.1 cd/lm
LEDs/each optic	1
Light colour/type	White
Required components:	

BJB: 47.360.1110

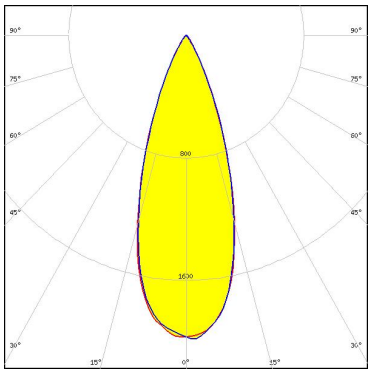

Light distribution files

PHILIPS

LED	Fortimo SLM L13 CoB
Ordering code	CP18742_YASMEEN-50-ZOOM-C2-WHT
FWHM / FWTM	24.0 + 42.0° / 54.0 + 85.0°
Efficiency	80 %
Peak intensity	2.6 cd/lm
LEDs/each optic	1
Light colour/type	White
Required components:	
C17769_YASMEEN-50-ZOOM-SUB	

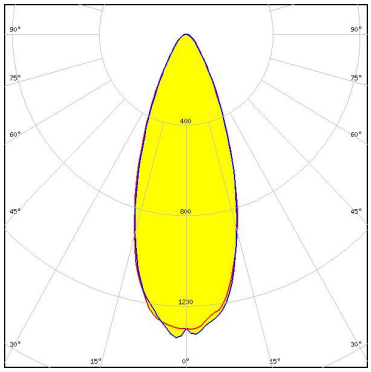

Light distribution files

Bender Wirth: 632a Hekla XL

PHILIPS

LED	Fortimo SLM L15 CoB
Ordering code	CP18742_YASMEEN-50-ZOOM-C2-WHT
FWHM / FWTM	24.0 + 45.0° / 56.0 + 93.0°
Efficiency	78 %
Peak intensity	2.4 cd/lm
LEDs/each optic	1
Light colour/type	White
Required components:	
C17769_YASMEEN-50-ZOOM-SUB	

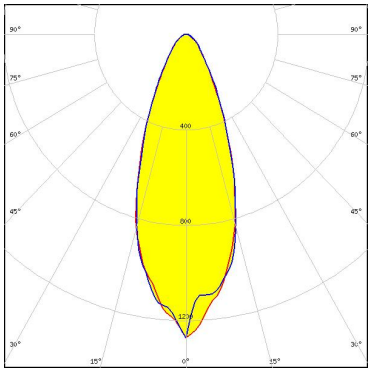

Light distribution files

Bender Wirth: 632a Hekla XL

LEDiL is a registered trademark of LEDiL Oy in the European Union, USA, and certain other countries.

GENERAL INFORMATION:

NOTE: The typical beam angle will be changed by different color, chip size and chip position tolerance. The typical total beam angle is the full angle measured where the luminous intensity is half of the peak value.

Due to use of high power COB's with this product, special attention to proper thermal design is highly recommended. LEDiL has no liability for direct, indirect or consecutive damages arising from the LEDiL products being used outside of the recommended temperature range.

MATERIALS:

As part of our continuous research and improvement processes, and to ensure the best possible quality and availability of our products, LEDiL reserves the right to change material grades without notice.

PRODUCT DATA USER AGREEMENT AND DISCLAIMER:

The measured data in the provided downloadable LEDiL Product Datasheets and Mechanical 2D-Drawings is rounded and provided as reference for planning. LEDiL Oy's optical specifications have been verified by conducting performance testing of the products in accordance with the company's quality system. The reported data are averaged results of multiple measurements with typical variation. LEDiL Oy reserves the right to without prior notification make changes and improvements to its products.

LEDiL Oy assumes neither warranty, nor guarantee nor any other liability of any kind for the contents and correctness of the provided data. The provided data has been generated with highest diligence but the provided data may in reality not represent the complete possible variation range of all intrinsic parameters. Therefore, in certain cases a deviation from the provided data could occur.

LEDiL Oy reserves the right to undertake technical changes of its products without further notification which could lead to changes in the provided data. LEDiL Oy assumes no liability of any kind for the possible deviation from any provided data or any other damage resulting from the usage of the provided data.

The user agrees to this disclaimer and user agreement with the download or usage of the provided files.

LEDiL Oy
Joensuunkatu 7
FI-24100 SALO
Finland

LEDiL Inc.
228 West Page Street
Suite D
Sycamore IL 60178
USA

Ledil Optics Technology (Shenzhen) Co., Ltd.
405 , Block B
Casic Motor Building
Shenzhen 518057
P.R.CHINA

Local sales and technical support
www.ledil.com/where_to_buy

Shipping locations
Poznan, Poland
Hong Kong, China

Distribution Partners
www.ledil.com/where_to_buy

LEDiL is a registered trademark of LEDiL Oy in the European Union, USA, and certain other countries.