BRIANNA-CLIP-B

Installation clip for fastening BRIANNA lenses.

SPECIFICATION:

Dimensions	32.2 x 11.0
Height	10.2 mm
ROHS compliant	yes

MATERIALS:

Component	Type	Material	Colour	Finish	Length (mm)
BRIANNA-CLIP-B	Accessory	PC	clear		

ORDERING INFORMATION:

Component	Qty in box	MOQ	MPQ	Box weight (kg)

LEDiL is a registered trademark of LEDiL Oy in the European Union, USA, and certain other countries.

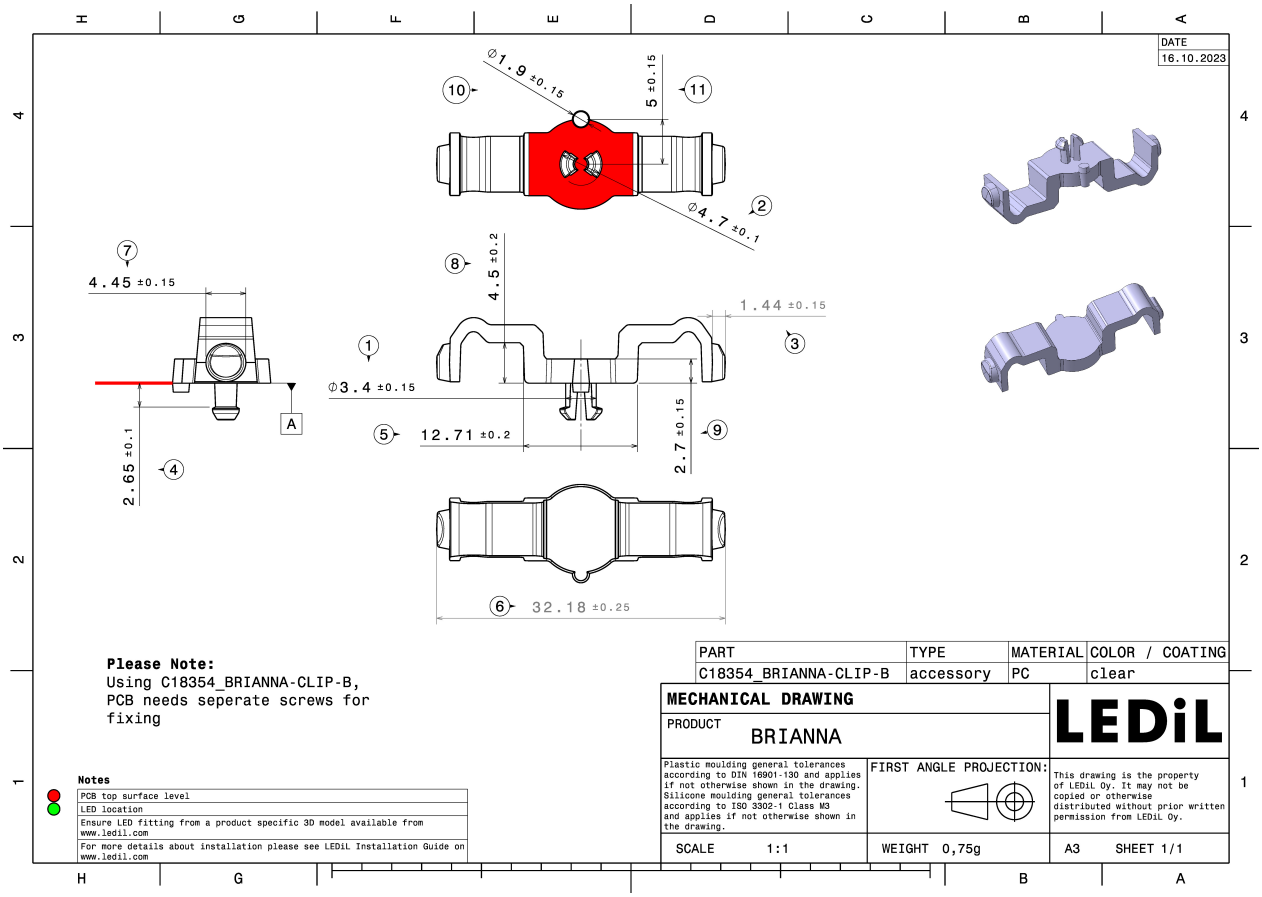

See also our general installation guide: www.ledil.com/installation_guide

LEDiL is a registered trademark of LEDiL Oy in the European Union, USA, and certain other countries.

AVAILABLE LEDiL PRODUCTS:

Product name	Description
C18327_BRIANNA-7X1-W	~60° wide beam. Variant with 7X1 lens.
C18328_BRIANNA-7X1-WW	~75° wide beam. Variant with 7X1 lens.
C18335_BRIANNA-14X1-W	~60° wide beam. Variant with 14X1 lens.
C18336_BRIANNA-14X1-WW	~75° wide beam. Variant with 14X1 lens.
C18343_BRIANNA-28X1-W	~60° wide beam. Variant with 28X1 lens.
C18344_BRIANNA-28X1-WW	~75° wide beam. Variant with 28x1 lens.
C19298_ISLA-6X1-OA	~25 + 80° assymmetric oval beam

LEDiL is a registered trademark of LEDiL Oy in the European Union, USA, and certain other countries.

GENERAL INFORMATION:

NOTE: The typical beam angle will be changed by different color, chip size and chip position tolerance. The typical total beam angle is the full angle measured where the luminous intensity is half of the peak value.

MATERIALS:

As part of our continuous research and improvement processes, and to ensure the best possible quality and availability of our products, LEDiL reserves the right to change material grades without notice.

PRODUCT DATA USER AGREEMENT AND DISCLAIMER:

The measured data in the provided downloadable LEDiL Product Datasheets and Mechanical 2D-Drawings is rounded and provided as reference for planning. LEDiL Oy's optical specifications have been verified by conducting performance testing of the products in accordance with the company's quality system. The reported data are averaged results of multiple measurements with typical variation. LEDiL Oy reserves the right to without prior notification make changes and improvements to its products.

LEDiL Oy assumes neither warranty, nor guarantee nor any other liability of any kind for the contents and correctness of the provided data. The provided data has been generated with highest diligence but the provided data may in reality not represent the complete possible variation range of all intrinsic parameters. Therefore, in certain cases a deviation from the provided data could occur.

LEDiL Oy reserves the right to undertake technical changes of its products without further notification which could lead to changes in the provided data. LEDiL Oy assumes no liability of any kind for the possible deviation from any provided data or any other damage resulting from the usage of the provided data.

The user agrees to this disclaimer and user agreement with the download or usage of the provided files.

LEDiL Oy
Joensuunkatu 7
FI-24100 SALO
Finland

LEDiL Inc.
228 West Page Street
Suite D
Sycamore IL 60178
USA

Ledil Optics Technology (Shenzhen) Co., Ltd.
405 , Block B
Casic Motor Building
Shenzhen 518057
P.R.CHINA

Local sales and technical support
www.ledil.com/
where_to_buy

Shipping locations
Poznan, Poland
Hong Kong, China

Distribution Partners
www.ledil.com/
where_to_buy

LEDiL is a registered trademark of LEDiL Oy in the European Union, USA, and certain other countries.