LARISA-O-PIN

~40° x 20° oval beam and holder with location pins

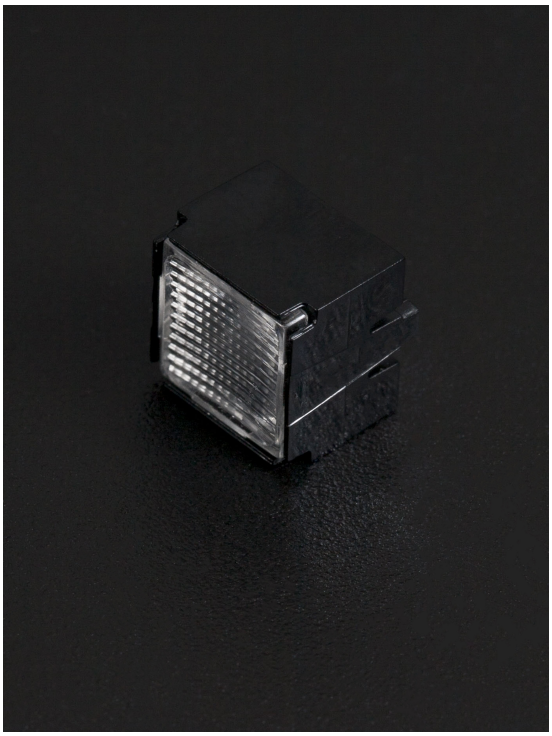

SPECIFICATION:

Dimensions	9.9 x 9.9
Height	7.5 mm
Fastening	glue, pin
ROHS compliant	yes

MATERIALS:

Component	Type	Material	Colour	Finish	Length (mm)
LARISA-HOLDER-PIN	Holder	PC	black		
LARISA-O	Single lens	PMMA	clear		

ORDERING INFORMATION:

Component		Qty in box	MOQ	MPQ	Box weight (kg)
CP15306_LARISA-O-PIN » Box size: 300 x 250 x 250 mm	Single lens	10000	300	100	7.1

LEDiL is a registered trademark of LEDiL Oy in the European Union, USA, and certain other countries.

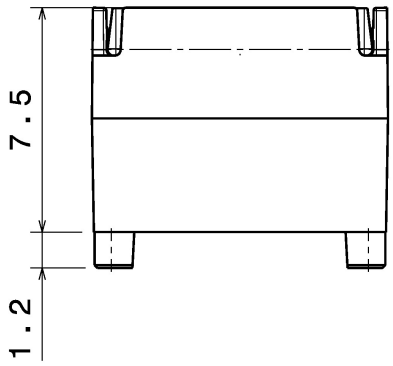

Front view

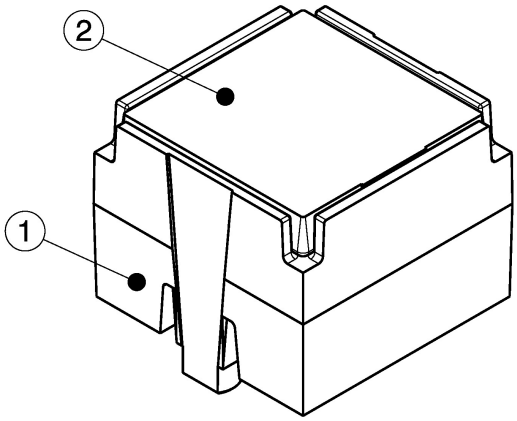

Isometric view
Scale: 5:1

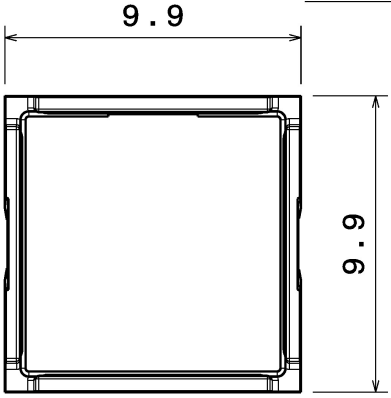

Top view

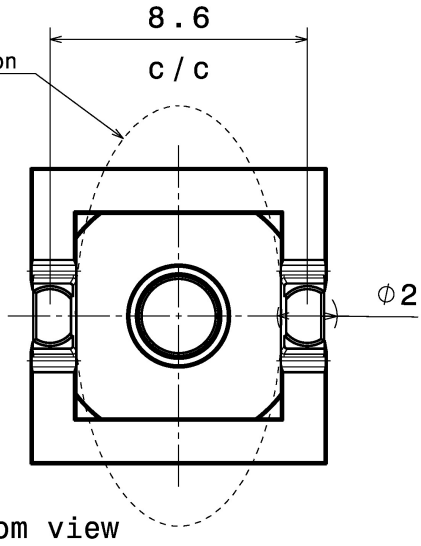

Bottom view

INDEX	PART NO	DESCRIPTION	MATERIAL	COLOUR
1	C15062	LARISA-HOLDER-PIN	PC	black
2	-	LARISA-lens	PMMA	

Tolerances if not otherwise shown
According to DIN ISO 2768-1
Linear measures:
Up to 30mm class M, otherwise class C.
According to DIN ISO 2768-2
Form and position: class L

Ledil Oy
Salorankatu 10
FIN 24240 SALO
Finland

THIRD ANGLE PROJECTION:

DRAWING TITLE
LARISA-PIN series

This drawing is the property of LEDiL Oy. It may not be reproduced, copied or communicated without a written agreement with LEDiL Oy.

SIZE A4
PART NUMBER -

SCALE 5:1 | WEIGHT - | SHEET 1/1

See also our general installation guide: www.ledil.com/installation_guide

LEDiL is a registered trademark of LEDiL Oy in the European Union, USA, and certain other countries.

OPTICAL RESULTS (MEASURED):

CREE LEDs

LED	XD16
FWHM / FWTM	40.0 + 20.0° / 72.0 + 51.0°
Efficiency	75 %
Peak intensity	2.1 cd/lm
LEDs/each optic	1
Light colour/type	White
Required components:	

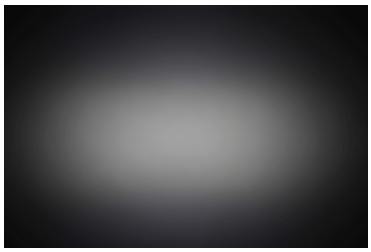

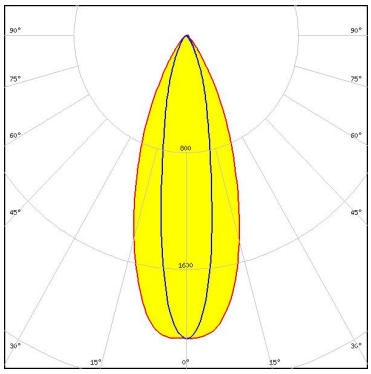

Light distribution files

CREE LEDs

LED	XQ-E HD
FWHM / FWTM	40.0 + 17.0° / 68.0 + 42.0°
Efficiency	82 %
Peak intensity	2.8 cd/lm
LEDs/each optic	1
Light colour/type	White
Required components:	

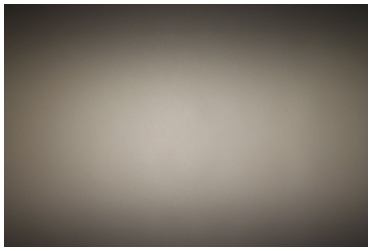

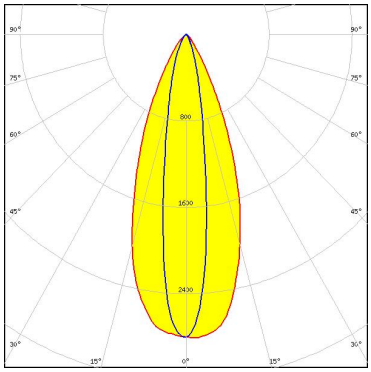

Light distribution files

CREE LEDs

LED	XQ-E HI
FWHM / FWTM	43.0 + 14.0° / 64.0 + 36.0°
Efficiency	79 %
Peak intensity	3.1 cd/lm
LEDs/each optic	1
Light colour/type	White
Required components:	

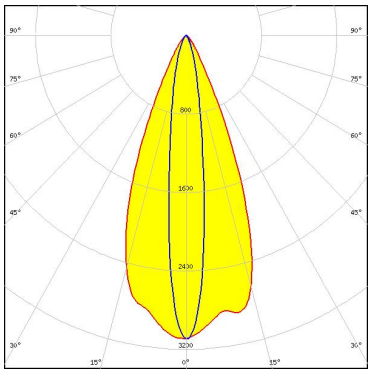

Light distribution files

LEDiL is a registered trademark of LEDiL Oy in the European Union, USA, and certain other countries.

OPTICAL RESULTS (MEASURED):

LUMILEDS

LED	LUXEON C
FWHM / FWTM	40.0 + 18.0° / 69.0 + 43.0°
Efficiency	79 %
Peak intensity	2.6 cd/lm
LEDs/each optic	1
Light colour/type	White
Required components:	

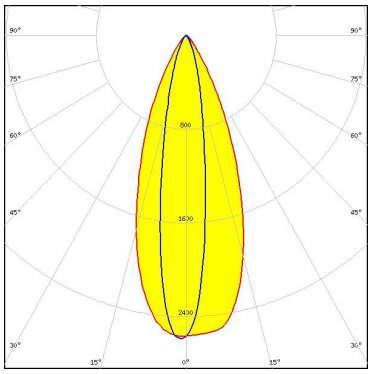

Light distribution files

LUMILEDS

LED	LUXEON Z
FWHM / FWTM	42.0 + 14.0° / 64.0 + 38.0°
Efficiency	79 %
Peak intensity	3.2 cd/lm
LEDs/each optic	1
Light colour/type	White
Required components:	

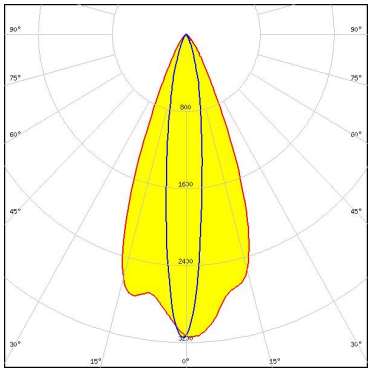

Light distribution files

NICHIA

LED	NCSxE17A
FWHM / FWTM	42.0 + 19.0° / 71.0 + 53.0°
Efficiency	68 %
Peak intensity	1.9 cd/lm
LEDs/each optic	1
Light colour/type	White
Required components:	

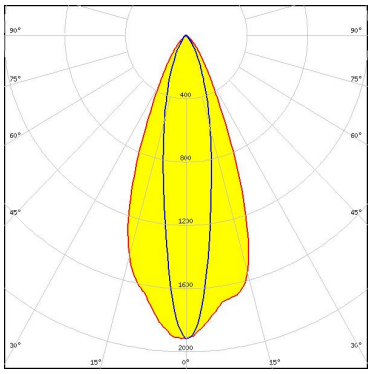

Light distribution files

LEDiL is a registered trademark of LEDiL Oy in the European Union, USA, and certain other countries.

OPTICAL RESULTS (MEASURED):

NICHIA

LED	NVSxE21A
FWHM / FWTM	43.0 + 22.0° / 76.0 + 61.0°
Efficiency	65 %
Peak intensity	1.5 cd/lm
LEDs/each optic	1
Light colour/type	White
Required components:	

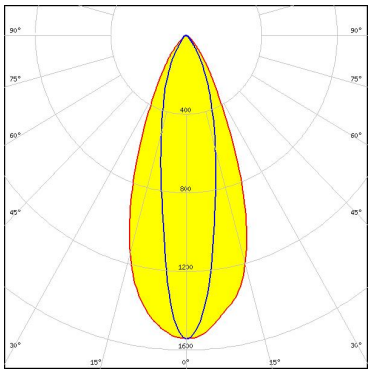

Light distribution files

OSRAM
Opto Semiconductors

LED	OSLON SSL 80
FWHM / FWTM	40.0 + 17.0° / 70.0 + 48.0°
Efficiency	77 %
Peak intensity	2.5 cd/lm
LEDs/each optic	1
Light colour/type	White
Required components:	

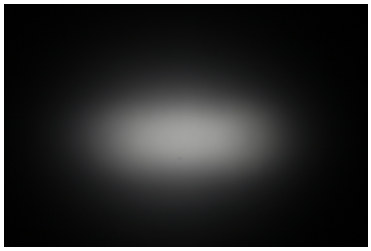

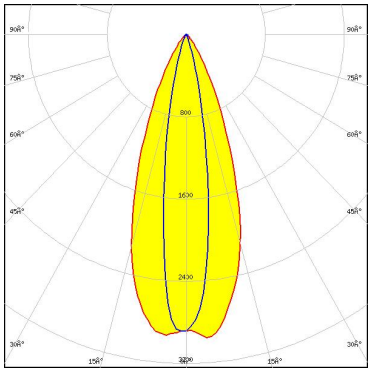

Light distribution files

LEDiL is a registered trademark of LEDiL Oy in the European Union, USA, and certain other countries.

GENERAL INFORMATION:

NOTE: The typical beam angle will be changed by different color, chip size and chip position tolerance. The typical total beam angle is the full angle measured where the luminous intensity is half of the peak value.

MATERIALS:

As part of our continuous research and improvement processes, and to ensure the best possible quality and availability of our products, LEDiL reserves the right to change material grades without notice.

PRODUCT DATA USER AGREEMENT AND DISCLAIMER:

The measured data in the provided downloadable LEDiL Product Datasheets and Mechanical 2D-Drawings is rounded and provided as reference for planning. LEDiL Oy's optical specifications have been verified by conducting performance testing of the products in accordance with the company's quality system. The reported data are averaged results of multiple measurements with typical variation. LEDiL Oy reserves the right to without prior notification make changes and improvements to its products.

LEDiL Oy assumes neither warranty, nor guarantee nor any other liability of any kind for the contents and correctness of the provided data. The provided data has been generated with highest diligence but the provided data may in reality not represent the complete possible variation range of all intrinsic parameters. Therefore, in certain cases a deviation from the provided data could occur.

LEDiL Oy reserves the right to undertake technical changes of its products without further notification which could lead to changes in the provided data. LEDiL Oy assumes no liability of any kind for the possible deviation from any provided data or any other damage resulting from the usage of the provided data.

The user agrees to this disclaimer and user agreement with the download or usage of the provided files.

LEDiL Oy
Joensuunkatu 7
FI-24100 SALO
Finland

LEDiL Inc.
228 West Page Street
Suite D
Sycamore IL 60178
USA

Ledil Optics Technology (Shenzhen) Co., Ltd.
405 , Block B
Casic Motor Building
Shenzhen 518057
P.R.CHINA

Local sales and technical support
www.ledil.com/where_to_buy

Shipping locations
Poznan, Poland
Hong Kong, China

Distribution Partners
www.ledil.com/where_to_buy

LEDiL is a registered trademark of LEDiL Oy in the European Union, USA, and certain other countries.