Technical Data Sheet

REDIIN240 Series ◊ DIN Rail Power Supply

240W ◊ Input: 100-240VAC

RECOM AC/DC Converter

FEATURES

- Universal input voltage range 90-264VAC
- Built-In constant current circuit
- Two output variations 24V and 48V available
- Adjustable output voltage range ±10%
- High power density with efficiency up to 90.5%
- Temperature range -30°C to +70°C
- Cold start capability -40°C
- Reduced no load power consumption <0.3W
- Width only 40mm
- Low weight only 620g
- 3 years warranty

Dimensions (HxWxD): 123.6 x 40.0 x 116.8mm (4.86 x 1.57 x 4.6 inch)
620g (1.37 lbs)

APPLICATIONS

SAFETY & EMC

E224736 E470721

RoHS2 compliant 10 from 10

Reach compliant

DESCRIPTION

The REDIIN240 DIN rail power supply series is designed for cost sensitive users to fulfill essential features, needed for many general industrial applications, without compromising on quality and reliability in the Basic Features Market segment. The REDIIN240 series delivers 240W output power in an extremely compact dimension of only 123.6 x 40.0 x 116.8mm. Two adjustable output variations from 24V to 48V are available. The convection-cooled units will operate full power from -30°C to +50°C (230VAC). It can operate in constant current mode, making it suitable for inductive and capacitive loads. The product is certified according to safety standards IEC/EN/UL 62368-1, IEC/EN/UL61010-1 and IEC/EN/UL/CSA61010-2-201. Electromagnetic radiated and conducted emissions are compliant to heavy industrial EN 61000-6-4 Class B Emission standard and EN 61000-6-2 Immunity standard. The product complies with environmental protection requirements as per RoHS Directive.

SELECTION GUIDE

Part Number	Input Voltage Range [VAC]	Output Voltage nom. [VDC]	Output Adjustability [VDC]	Output Current max. [A]	Efficiency (1) typ. [%]	Output Power max. [W]
REDIIN240-24	90-264	24	21.6-26.4	10	90	240
REDIIN240-48	90-264	48	43.2-52.8	5	90.5	240

Note1: Efficiency is tested at nominal input (230VAC) and full load at +25°C ambient

copyright © RECOM Power GmbH, all rights reserved

BASIC CHARACTERISTICS (measured @ T_{AMB}= 25°C, nom. V_{IN}, full load and after warm-up unless otherwise stated)

Parameter	Condition		Min.	Typ.	Max.
Nominal Input Voltage	50/60Hz		100VAC		240VAC
Operating Range	47-63Hz		90VAC		264VAC
Input Current	115VAC			2.5A	
	230VAC			1.3A	
Inrush Current	230VAC, cold start				40A
No Load Power Consumption	REDIIN240-24				210mW
	REDIIN240-48				300mW
Input Frequency Range			47Hz		63Hz
Output Adjustability (2)	REDIIN240-24		21.6VDC		26.4VDC
	REDIIN240-48		43.2VDC		52.8VDC
Power Factor	115/230VAC			0.95	
Start-up time	115/230VAC			500ms	
Rise time	115/230VAC			30ms	
Hold-up time	115/230VAC			20ms	
Periodic and Random Deviation PARD (3)	REDIIN240-24	0°C to 70°C			150mVp-p
		-30°C to 0°C			450mVp-p
	REDIIN240-48	0°C to 70°C			200mVp-p
		-30°C to 0°C			600mVp-p

Note2: Refer to **„Adjust“** in dimension drawing.
Note3: Measured at 20MHz bandwidth with an AC coupling mode, 5cm wires, 0.1µF MLCC and µf E-cap in parallel.

REDIIN240-24

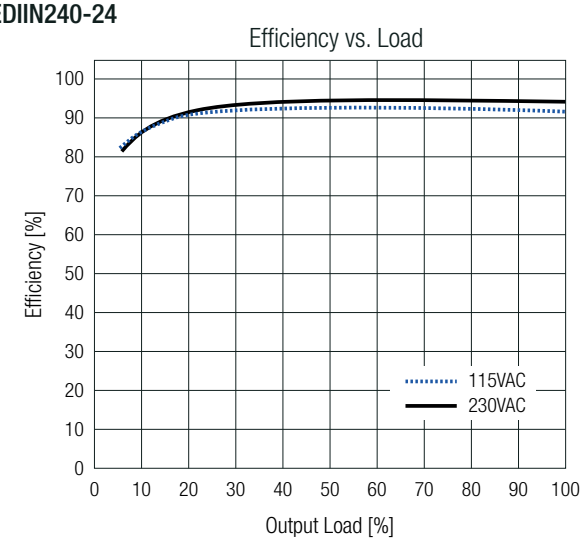

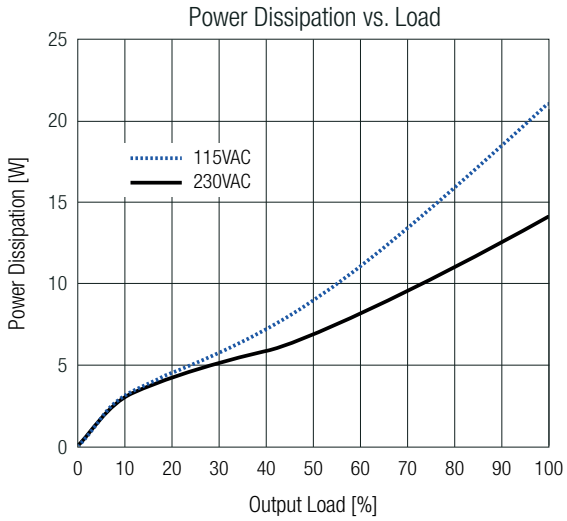

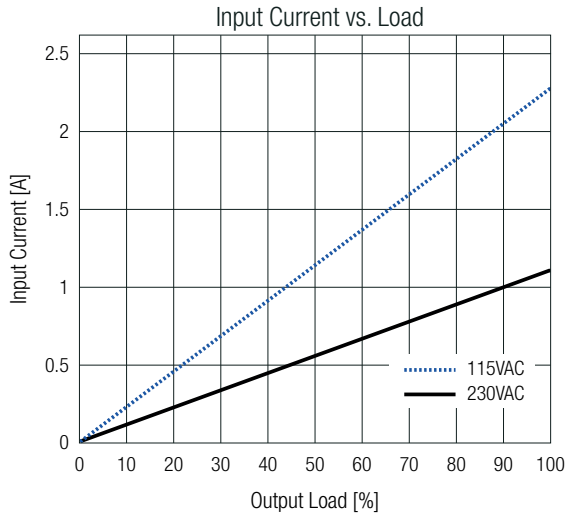

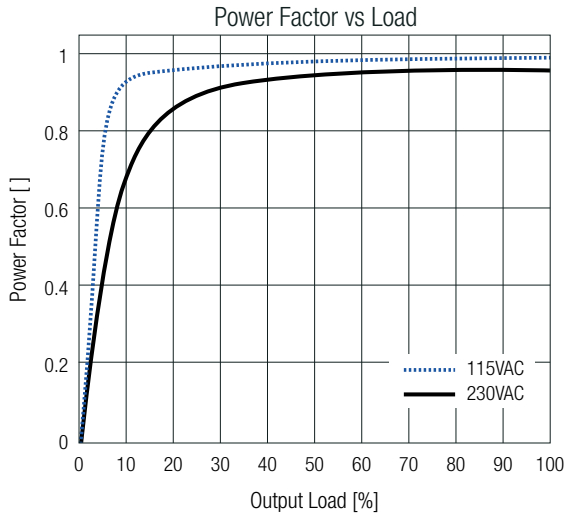

copyright © RECOM Power GmbH, all rights reserved

BASIC CHARACTERISTICS (measured @ T_{AMB}= 25°C, nom. V_{IN}, full load and after warm-up unless otherwise stated)

REDIIN240-48

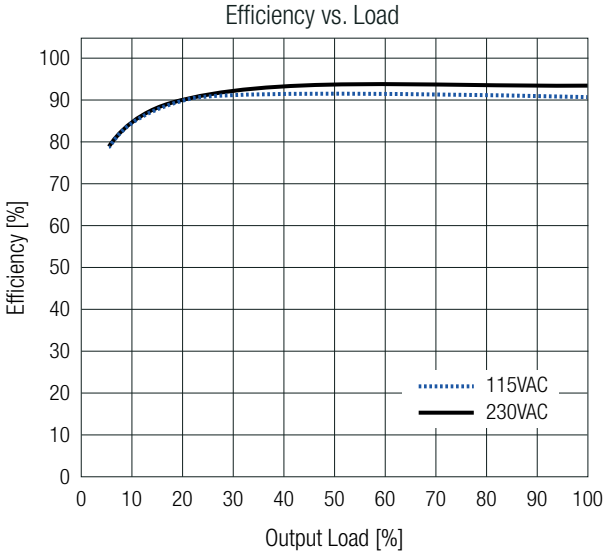

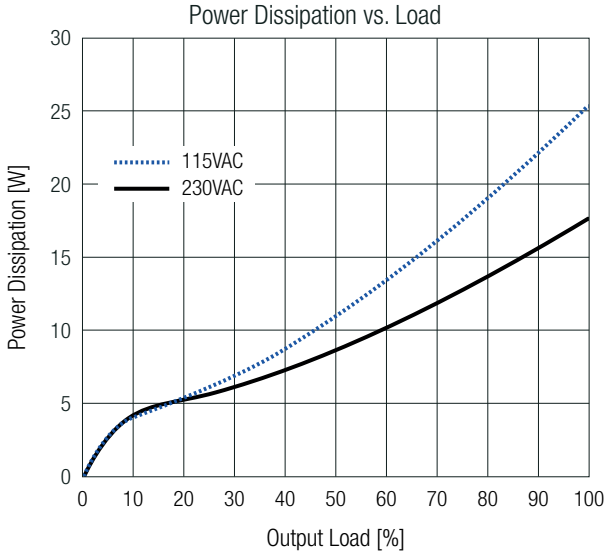

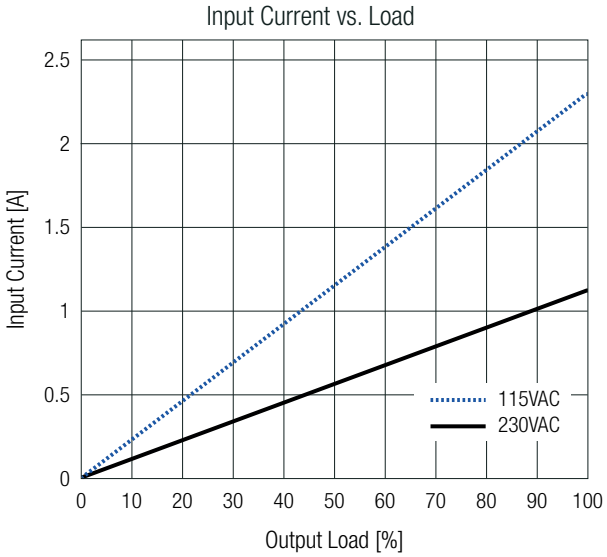

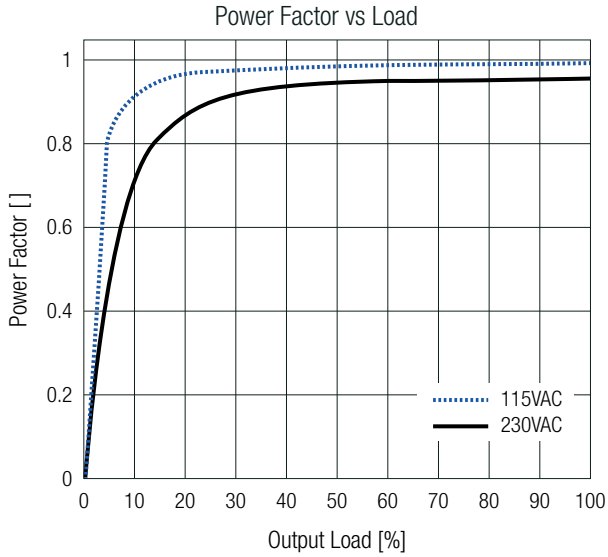

REGULATIONS (measured @ T_{AMB}= 25°C, nom. V_{IN}, full load and after warm-up unless otherwise stated)

Parameter	Condition		Value
Output Accuracy			±1.0% max.
Line Regulation	low line to high line, full load		±0.5% max.
Load Regulation	0% to 100% load	REDIIN240-24	±0.5% max.
		REDIIN240-48	±0.5% max.
Max. Capacitive Load (start-up)	REDIIN240-24		8000µF
	REDIIN240-48		3000µF
Transient Response	115V/230VAC, 10-100% load ±10% typ.; slew rate: 2.5A/µs, 50% duty cycle @ 5 Hz & 10 kHz		±10% typ.

copyright © RECOM Power GmbH, all rights reserved

PROTECTIONS (measured @ T_{AMB}= 25°C, nom. V_{IN}, full load and after warm-up unless otherwise stated)

Parameter	Type		Value
Internal Input Fuse			T4AL/250V
Short Circuit Protection (SCP)			hiccup mode, auto recovery
Over Voltage Protection (OVP)	SELV output	REDIIN240-24	33.6VDC, latch off
		REDIIN240-48	64.8VDC, latch off
Over Voltage Category (OVC)			OVC II
Over Current Protection (OCP)	refer to **„Over Current Protection“**		105% - 150% of rated load current, auto recovery
Over Temperature Protection (OTP)			latch off
Class of Equipment			Class I with PE connection
Isolation Voltage (safety certified) (4)	1 minute	I/P to O/P	3kVAC
		I/P to PE	2kVAC
		O/P to PE	1kVAC
Leakage Current	240VAC/50Hz		0.75mA max.
Power OK LED	normal mode, no protection activated		green light

Note4: For repeat Hi-Pot testing, reduce the time and/or the test voltage

Over Current Protection

The unit operates in a constant voltage mode within its rated load range. When exceeding the maximum current rating by 105% to 150% of its nominal rating the unit enters into a limited-current mode which drives the output voltage to approximately 80% of its nominal set point. Further increased load leading the units into a hiccup mode with automated restart.

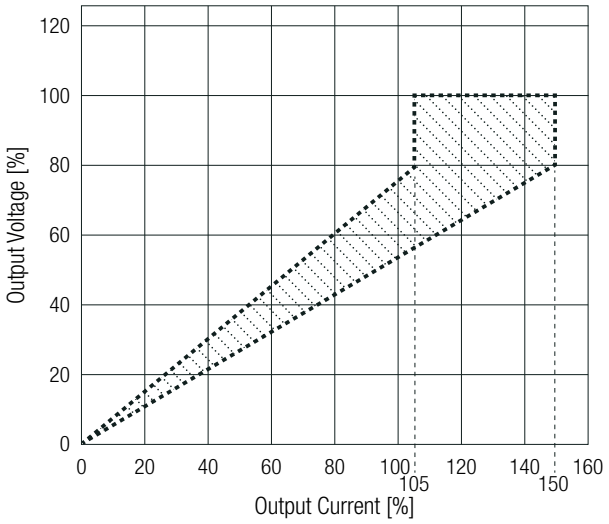

ENVIRONMENTAL (measured @ T_{AMB}= 25°C, nom. V_{IN}, full load and after warm-up unless otherwise stated)

Parameter	Condition		Value
Operating Ambient Temperature Range (6)	@ natural convection (0.1m/s)	with derating	-30°C to +70°C
		full load	refer to **„Derating Graph“**
Operating Altitude (5)			5000m
Operating Humidity	non-condensing		20% - 95% RH max.
Pollution Degree			PD2
Shock	according to IEC 60068-2-27	operating	Half Sine Wave: 10G/11ms; 1 time in X axis
		non-operating	Half Sine Wave: 50G/11ms; 3 time per direction, 9 times total
Vibration	according to IEC 60068-2-26	operating	Sine Wave: 10Hz to 500Hz @ 19.6m/s² (2G peak); 10 min per cycle, 60 min for X direction
		non-operating	Random: 5Hz to 500Hz; 2.09Grms; 20 min per axis for all X, Y, Z directions
MTBF	according to telcordia SR-332, 115/230VAC		700 x 10^3 hours

Note5: Recognized by safety agency for safe operation up to 5000m. High altitude operation may impact the performance and lifetime

copyright © RECOM Power GmbH, all rights reserved

ENVIRONMENTAL (measured @ T_{AMB}= 25°C, nom. V_{IN}, full load and after warm-up unless otherwise stated)

Derating Graph
(@ Chamber and natural convection 0.1m/s)

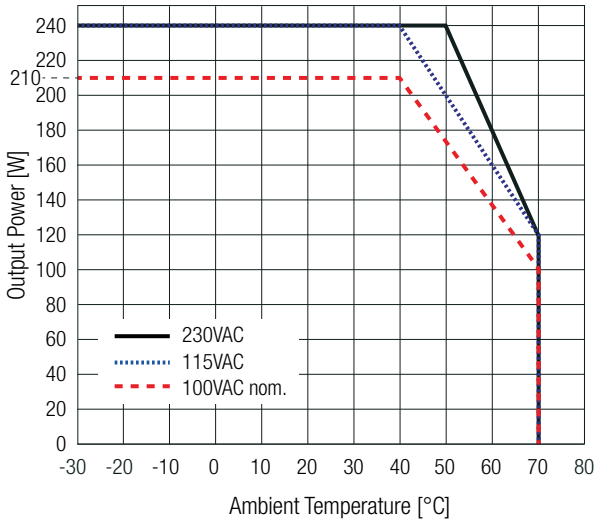

Note6: cold start capability -40°C; between -40°C and -30°C may exceed limits.
Guaranteed start up above -30°C

SAFETY & CERTIFICATIONS

Certificate Type (Safety)	Report Number	Standard
Audio/Video, information and communication technology equipment - Part1: Safety requirements (CB)	CN23AC4J-001	IEC62368-1:2014 2nd Edition
Audio/Video, information and communication technology equipment - Part1: Safety requirements		EN62368-1:2014 + A11:2017
Audio/Video, information and communication technology equipment - Part1: Safety requirements	E224736	UL62368-1:2014 CAN/CSA-C22.2 No. 62368-1:2014
Electrical Equipment For Measurement, Control, and Laboratory Use; Part 1: General Requirements (CB)	CN23338P-001	IEC61010-1:2010+A1:2016, 3rd Edition
Electrical Equipment For Measurement, Control, and Laboratory Use; Part 1: General Requirements		EN61010-1:2010+A1:2019
Electrical Equipment For Measurement, Control, and Laboratory Use; Part 1: General Requirements	E470721	UL61010-1, 3rd Edition, 2012-05-11 CSA C22.2 No. 61010-1, 3rd Ed. 2012-01-01
Electrical Equipment For Measurement, Control, and Laboratory Use; Part 2-201: Particular requirements for control equipment (CB Scheme)	CN23338P-001	IEC61010-2-201:2017, 2nd Edition
Electrical Equipment For Measurement, Control, and Laboratory Use; Part 2-201: Particular requirements for control equipment		EN IEC 61010-2-201:2018
Electrical Equipment For Measurement, Control, and Laboratory Use; Part 2-201: Particular requirements for control equipment	E470721	UL61010-2-201, 2nd Edition CSA C22.2 No. 61010-2-201, 2nd Edition
RoHS2		RoHS 2011/65/EU + AM2015/863

EMC Compliance according to EN55032/35	Condition		Standard / Criterion
Electromagnetic compatibility of multimedia equipment - Emission requirements			EN55032:2015+A11:2020, Class B
Electromagnetic compatibility of multimedia equipment - Immunity requirements			EN55035:2017+A11:2020
ESD Electrostatic discharge immunity test (level 4)	Air: ±2, 4, 8kV Contact ±2, 4kV		IEC61000-4-2:2008 , Criteria A EN61000-4-2:2009, Criteria A
Radiated, radio-frequency, electromagnetic field immunity test (level 2)	3V/m (80-1000MHz) 3V/m (1800, 2600, 3500, 5000MHz)		IEC/EN61000-4-3:2006+A2:2010, Criteria A
Fast Transient and Burst Immunity (level 3)	AC Power Port: L, N, PE, L-N-PE: 1kV		IEC/EN61000-4-4:2012, Criteria A
Surge Immunity (level 4)	AC Power Port: L-N: 0.5, 1kV L-PE, N-PE: 0.5, 1, 2kV		IEC/EN61000-4-5:2014+A1:2017, Criteria A
Immunity to conducted disturbances, induced by radio-frequency fields (level 2)	3Vrms (0.15-30MHz) 3-1Vrms (10-30MHz) 1Vrms (30-80MHz)		IEC61000-4-6:2013, Criteria A EN61000-4-6:2014, Criteria A
Power Magnetic Field Immunity (level 2)	1A/m 50Hz		IEC61000-4-8:2009, Criteria A EN61000-4-8:2010, Criteria A
Voltage Dips	100/230/240VAC, 50Hz	>95%, 0.5 cycles; 30%, 25 cycles	IEC/EN61000-4-11:2004+A1:2017, Criteria A

copyright © RECOM Power GmbH, all rights reserved

SAFETY & CERTIFICATIONS

Voltage Interruptions	100/230/240VAC, 50Hz	>95%, 250 cycles	IEC/EN61000-4-11:2004+A1:2017, Criteria B
Limits of Harmonic Current Emissions	meets standard up to 100W P_{OUT}		EN IEC 61000-3-2:2019
Limits of Voltage Fluctuations & Flicker			EN61000-3-3:2013+A1:2019

EMC Compliance according to EN61204-3	Condition		Standard / Criterion
Low voltage power supplies, d.c. output Part 3: Electromagnetic compatibility			EN61204-3:2000, Class A
ESD Electrostatic discharge immunity test	Air: ±2, 4, 8kV Contact: ±2, 4kV		IEC61000-4-2:2008, Criteria A EN61000-4-2:2009, Criteria A
Radiated, radio-frequency, electromagnetic field immunity test	3V/m (80-1000MHz, 895-905MHz)		IEC/EN61000-4-3:2006+A2:2010, Criteria A
Fast Transient and Burst Immunity	AC Power Port: L, N, PE, L-N-PE: 1kV		IEC/EN61000-4-4:2012, Criteria A
Surge Immunity	AC Power Port: L-N: 0.5, 1kV AC Power Port: L-PE, N-PE: 0.5, 1, 2kV		IEC/EN61000-4-5:2014+A1:2017 Criteria A
Immunity to conducted disturbances, induced by radio-frequency fields	3Vrms (0.15-80MHz)		IEC61000-4-6:2013, Criteria A EN61000-4-6:2014, Criteria A
Voltage Dips	100VAC, 50Hz	30%	IEC/EN61000-4-11:2004+A1:2017, Criteria A
		60%	IEC/EN61000-4-11:2004+A1:2017, Criteria B
	230/240VAC, 50Hz	30%, 60%	IEC/EN61000-4-11:2004+A1:2017, Criteria A
Voltage Interruptions	100/230/240VAC, 50Hz	>95%	IEC/EN61000-4-11:2004+A1:2017, Criteria B
Limits of Harmonic Current Emissions			EN IEC 61000-3-2:2019
Limits of Voltage Fluctuations & Flicker			EN61000-3-3:2013+A1:2017

EMC Compliance according to IEC/EN61000-6-4/6-2	Condition		Standard / Criterion
Electromagnetic compatibility (EMC) - Part 6-4: Generic standards - Emission standard for industrial environments			IEC61000-6-4:2006+A1:2010 EN61000-6-4:2007+A1:2011
Electromagnetic compatibility (EMC) - Part 6-2: Generic standards - Immunity standard for industrial environments			IEC/EN61000-6-2:2005
ESD Electrostatic discharge immunity test	Air: ±2, 4, 8, 15kV Contact: ±2, 4, 6, 8kV		IEC61000-4-2:2008, Criteria A EN61000-4-2:2009, Criteria A
Radiated, radio-frequency, electromagnetic field immunity test	10V/m (80-1000MHz) 3V/m (1400-2000MHz) 1V/m (2000-2700MHz)		IEC/EN61000-4-3:2006+A2:2010, Criteria A
Fast Transient and Burst Immunity	AC Power Port: L, N, PE, L-N-PE: 2kV		IEC/EN61000-4-4:2012 Criteria A
Surge Immunity	AC Power Port L-N: 0.5, 1, 2kV; L-PE, N-PE: 0.5, 1, 2, 4kV		IEC/EN61000-4-5:2014+A1:2017, Criteria A
Immunity to conducted disturbances, induced by radio-frequency fields	10Vrms (0.15-80MHz)		IEC61000-4-6:2013, Criteria A EN61000-4-6:2014, Criteria A
Power Magnetic Field Immunity	30A/m, 50/60Hz		IEC61000-4-8:2009, Criteria A EN61000-4-8:2010, Criteria A
Voltage Dips	100VAC, 50Hz	100%, 1 cycle	IEC61000-4-11:2004+A1:2017, Criteria A
		60%, 10 cycles; 30%, 25 cycles	IEC61000-4-11:2004+A1:2017, Criteria B
	230/240VAC, 50Hz	100%, 1 cycle; 60%, 10 cycles; 30%, 25 cycles	IEC61000-4-11:2004+A1:2017, Criteria A
Voltage Interruptions	100/230/240VAC, 50Hz	100%, 250 cycles	IEC/EN61000-4-11:2004+A1:2017, Criteria B
Limits of Harmonic Current Emissions			EN IEC 61000-3-2:2019
Limits of Voltage Fluctuations & Flicker			EN61000-3-3:2013+A1:2017

copyright © RECOM Power GmbH, all rights reserved

DIMENSION & PHYSICAL CHARACTERISTICS

Parameter	Type	Value
Material	chassis	aluminum
Dimension (HxWxD)		123.6 x 40.0 x 116.8mm 4.86 x 1.57 x 4.6 inch
Weight	with mounting clip	620g 1.37 lbs

Dimension Drawing (mm)

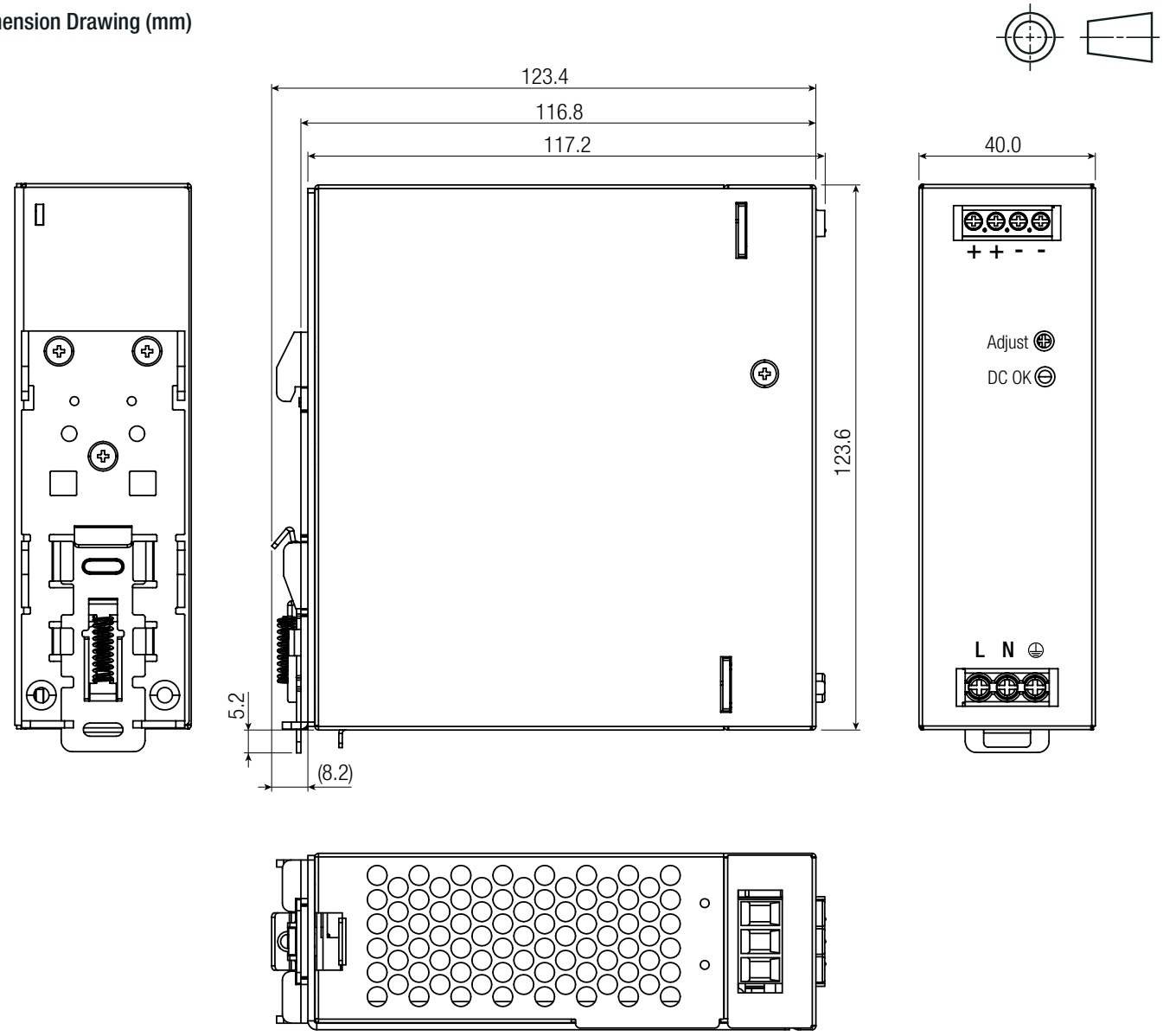

Use flexible (stranded wire) or solid cables with the following wire cross-section is recommended.
Ferrules are required for flexible cables.
Use copper conductors designed for an operating temperature of at least 105°C.

Screw Terminal Information

Function	AWG	mm²	Tightening Torque
VAC in L	18-12	0.8-3.3	0.6-0.8Nm
VAC in N	18-12	0.8-3.3	0.6-0.8Nm
PE ⏚	18-12	0.8-3.3	0.6-0.8Nm
-Vout	18-12	0.8-3.3	0.4Nm
+Vout	18-12	0.8-3.3	0.4Nm
Wire stripping length: 7mm			

Tolerance: ±0.5mm

copyright © RECOM Power GmbH, all rights reserved

INSTALLATION & APPLICATION

Mounting Instruction

Mounting Rail: Standard TS35 DIN Rail in accordance with EN 60715

Mounting

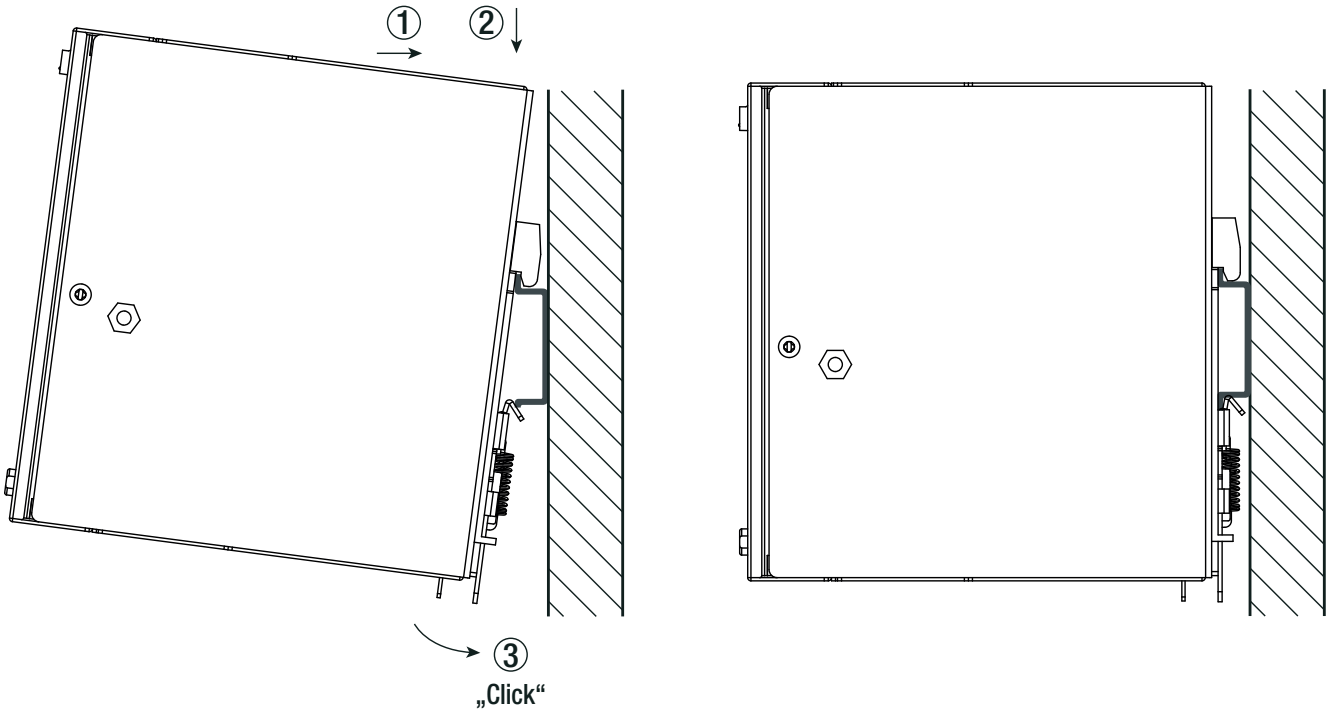

Release

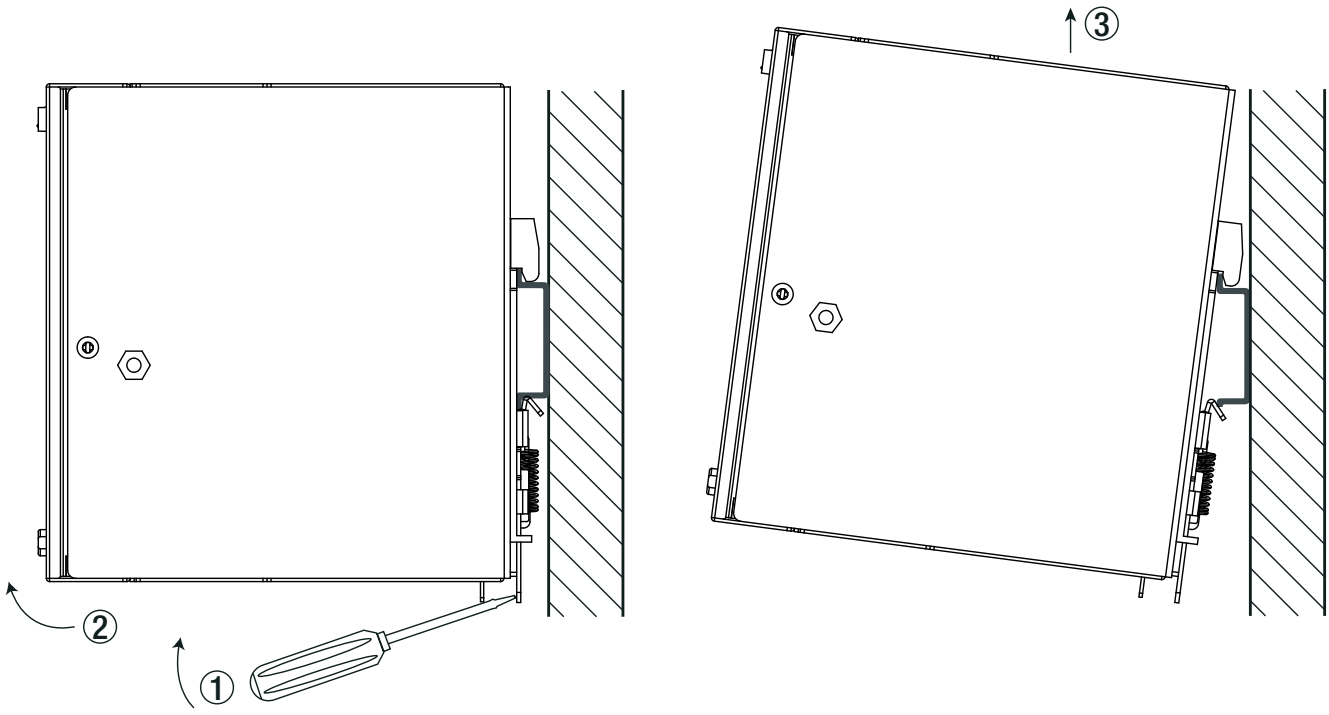

copyright © RECOM Power GmbH, all rights reserved

INSTALLATION & APPLICATION

Multiple Mounting

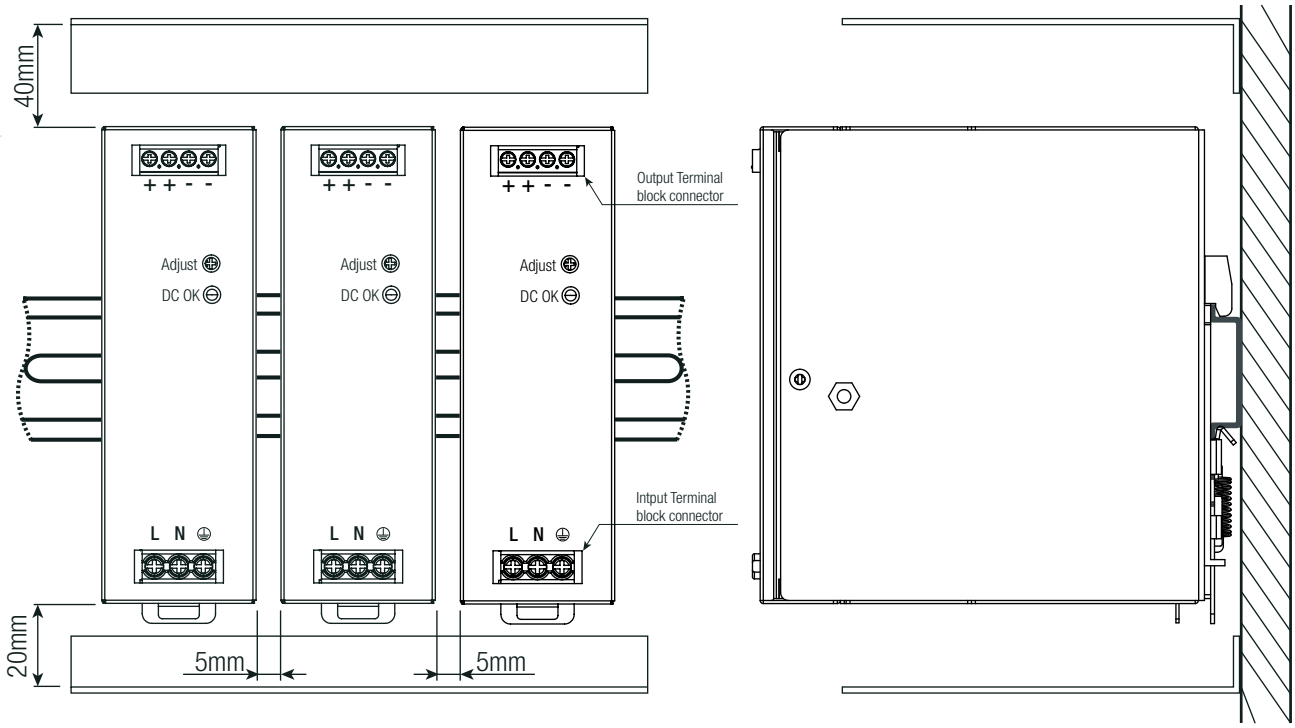

Note7: To guarantee sufficient convection cooling, keep a distance of 40mm above and 20mm below the device.
As well as a lateral distance of 5 mm to other devices. If the load is less than 50%, the lateral distance can be 0mm.
If the adjacent device is a heat source, the lateral distance is 15mm.
For vertical mounting the device should be installed with the input terminal on the bottom.

BLOCK DIAGRAM

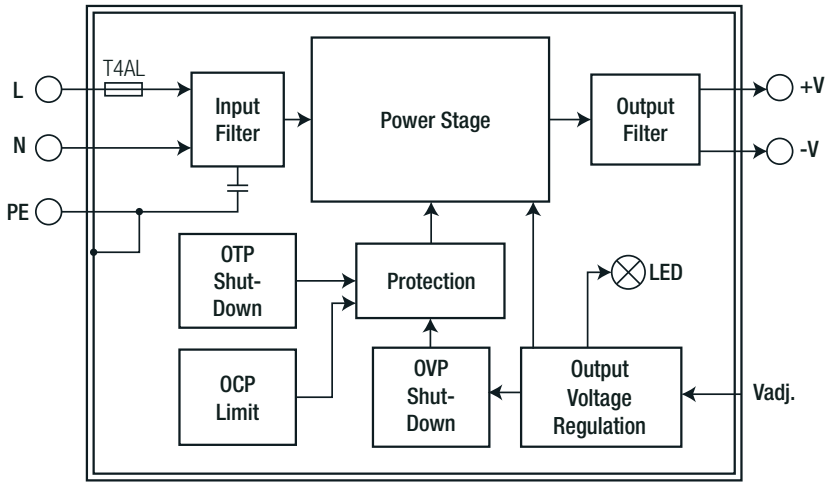

PACKAGING INFORMATION

Parameter	Type	Value
Packaging Dimension (LxWxH)	cardboard box	505.0 x 305.0 x 226.0mm
Packaging Quantity		9pcs
Storage Temperature Range		-40°C to +85°C
Storage Humidity	non-condensing	10% - 95% RH max.

The product information and specifications may be subject to changes even without prior written notice.The product has been designed for various applications; its suitability lies in the responsibility of each customer. The products are not authorized for use in safety-critical applications without RECOM's explicit written consent. A safety-critical application is an application where a failure may reasonably be expected to endanger or cause loss of life, inflict bodily harm or damage property. The applicant shall indemnify and hold harmless RECOM, its affiliated companies and its representatives against any damage claims in connection with the unauthorized use of RECOM products in such safety-critical applications.

copyright © RECOM Power GmbH, all rights reserved