THE INFORMATION CONTAINED IN THIS DRAWING IS THE SOLE PROPERTY OF ANDERSON POWER PRODUCTS. ANY REPRODUCTION IN PART OR WHOLE WITHOUT THE WRITTEN PERMISSION OF ANDERSON POWER PRODUCTS IS PROHIBITED.

Copyright 2025

ANDERSON POWER PRODUCTS RESERVES THE RIGHT TO ALTER PRODUCT TYPES, THEIR TECHNICAL DATA, DIMENSION, STYLE AND ACCESSORIES WITHOUT PRIOR NOTIFICATION.

KIT		*IBC160-PLUGSEAL-KIT*			
DESCRIPTION		*IBC160 SEALING KIT FOR PLUG*			
ITEM #	**PART NUMBER**	**DESCRIPTION**	**MATERIAL**	**COLOR**	**QUANTITY**
1	IBC160-VOLTAGE-COVER	IBC160 VOLTAGE COVER	PC	CLEAR	1
2	116220P3	IBC160 VOLTAGE COVER O-RING	RUBBER	LIGHT BLUE	1
3	116220P4	IBC160 PLUG O-RING	RUBBER	WHITE	1
4	H1120P70	M3 x 8 PLASTITE SCREW	STAINLESS STEEL	-	2

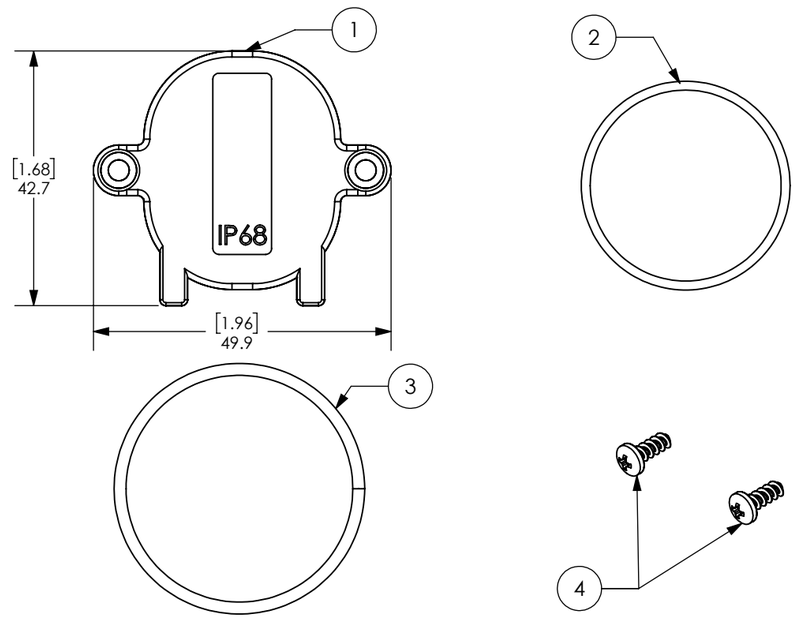

KIT		*IBC160-RECSEAL-KIT*			
DESCRIPTION		*IBC160 SEALING KIT FOR RECEPTACLE*			
ITEM #	**PART NUMBER**	**DESCRIPTION**	**MATERIAL**	**COLOR**	**QUANTITY**
1	IBC160-VOLTAGE-COVER	IBC160 VOLTAGE COVER	PC	CLEAR	1
2	116220P3	IBC160 VOLTAGE COVER O-RING	RUBBER	LIGHT BLUE	1
3	H1120P70	M3 x 8 PLASTITE SCREW	STAINLESS STEEL	-	2

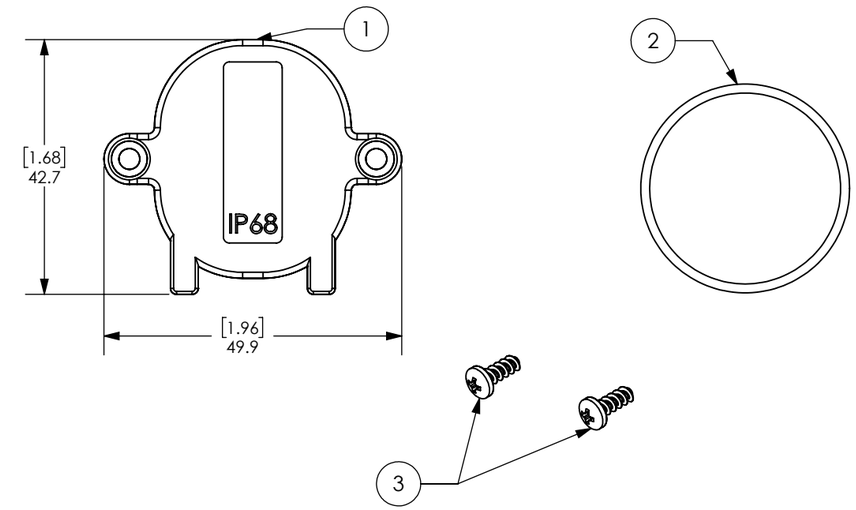

NOTES:

1. KIT TO BE USED ON IBC160 SERIES ONLY.
2. ASSEMBLE ONTO CONNECTOR PER RESPECTIVE CONFIGURATION ASSEMBLY INSTRUCTIONS:
   4 AUXILIARY: 1S6940-4AUX
   6 AUXILIARY: 1S6940-6AUX
3. IP68 REQUIREMENTS:
   ALL:
   IP68 RATING ONLY IN MATED CONDITION.
   INLINE:
   BOTH PLUG AND RECEPTACLE CONNECTORS MUST HAVE SEALING KIT INSTALLED.
   PANEL MOUNT:
   PLUG CONNECTOR MUST HAVE SEALING KIT INSTALLED AND PANEL MOUNT MUST BE MOUNTED USING PANEL MOUNT GASKET.
4. AIR TUBE CONFIGURATIONS ARE NOT COMPATIBLE WITH IP68 SEALING KITS.

REV.	DESCRIPTION	APPRV	DATE
	REVISIONS		

DIMENSIONS ARE IN MM. INCH DIMENSIONS SHOWN IN [ ] ARE FOR REFERENCE ONLY

GENERAL TOLERANCE IN MM UNLESS SPECIFIED OTHERWISE:

0-6	>6-18	>18-50	>50-120	>120
±.4	±.5	±.5	±.8	± 1.0

ANGLES: ± 5°

MATERIAL: SEE TABLE

FINISH: SEE TABLE

3rd ANGLE PROJECTION

APPROVALS

DRAWN	IG	8/19/2025
CHECKED	JWH	8/21/2025
MKT APPRV	JF	8/21/2025
QC APPRV	MV	8/29/2025
ENG APPRV	SH	8/27/2025

-CAD GENERATED DRAWING-
DO NOT MANUALLY UPDATE
DO NOT SCALE

ANDERSONPOWER

TITLE
IBC160 PLUG & RECEPTACLE IP68 SEALING KITS

COA NO.	PROD. LINE		
5489	IBC		
SIZE	**DWG NO.**		**REV.**
B	B03187S1		0
SCALE	**CADFILE**		**SHEET**
1:1	06801		1 OF 1