User Manual
SKU: AKX00069

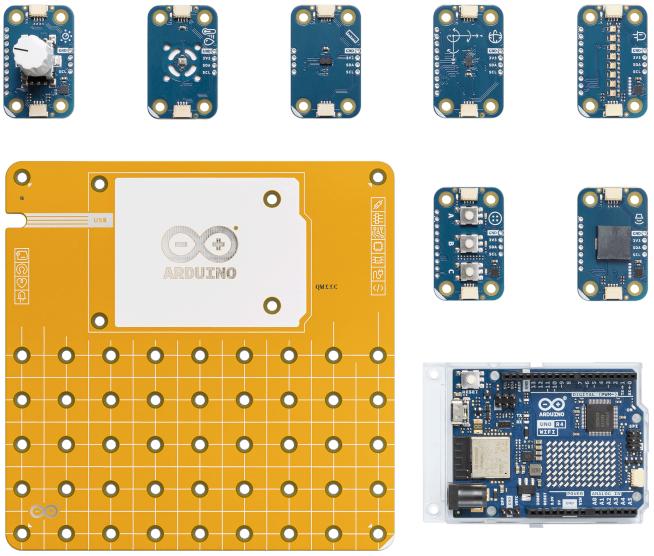

English

Description

The Arduino® Plug and Make Kit features the Arduino® UNO R4 WiFi with built-in Wi-Fi® capabilities, enabling connectivity and opening the doors to integration with the Arduino® Cloud platform. This kit includes a selection of seven Modulino® nodes, all easily connectable via I2C Qwiic cables. Tailor your project to perfection by selecting the sensors and inputs that best suit your needs, and experience a completely solder-free way to easily build your ideas. Dive into the world of electronics with hands-on learning and intuitive module interaction, empowering you to innovate and create with unparalleled ease and flexibility.

Target Areas

Maker, beginner, education

Product Intended Use

Arduino Hardware Products are primarily intended for development and prototyping but may also support production solutions. Developers must design and verify security controls early, based on the intended deployment environment. Security is a shared responsibility between Arduino and the solution builder, who must assess the hardware's available security features and add any necessary protections.

Visit docs.arduino.cc/tutorials/security/intended-use-and-security-model/ for the complete Arduino Hardware Products: Intended use and Security model.

Contents

1 Application Examples **5**

2 Features **6**

2.1 Kit Content 6

2.2 Accessories 6

2.3 Microcontroller 7

3 Related Products **7**

4 Rating **8**

4.1 Recommended Operating Conditions 8

5 Block Diagram **8**

6 Functional Overview - Arduino UNO R4 WiFi **9**

6.1 Pinout 9

6.2 Power Specifications 11

6.2.1 Supply Options 11

6.2.2 Power Tree 11

6.2.3 Pin Specifications 12

6.3 Mechanical Information 12

7 Modulino® Base **13**

7.1 Mechanical Information 13

8 Modulino® Nodes **14**

8.1 General Characteristics 14

8.1.1 Mechanical Information 14

8.1.2 I2C Side Connectors 15

8.1.3 I2C Address Reference 15

8.2 Modulino® Nodes With Dedicated I2C Interface Controller 17

8.2.1 Pull-up Resistors 17

8.3 Modulino® Movement 18

8.3.1 Technical Specifications 18

8.3.2 Pinout 19

8.3.3 Mechanical Information 21

8.4 Modulino® Distance 22

8.4.1 Technical Specifications 22

8.4.2 Pinout 23

8.4.3 Mechanical Information 24

8.5 Modulino® Thermo 25
8.5.1 Technical Specifications 25
8.5.2 Pinout 26
8.5.3 Mechanical Information 27
8.6 Modulino® Knob 28
8.6.1 Technical Specifications 28
8.6.2 Pinout 29
8.6.3 Mechanical Information 30
8.7 Modulino® Buzzer 31
8.7.1 Technical Specifications 31
8.7.2 Pinout 32
8.7.3 Mechanical Information 33
8.8 Modulino® Pixels 34
8.8.1 Technical Specifications 34
8.8.2 Pinout 35
8.8.3 Mechanical Information 37
8.9 Modulino® Buttons 38
8.9.1 Technical Specifications 38
8.9.2 Pinout 39
8.9.3 Mechanical Information 40
9 Device Operation 41
9.1 Getting Started - IDE 41
9.2 Getting Started - The Plug and Make Kit 41
9.3 Getting Started - Arduino Cloud Editor 41
9.4 Getting Started - Arduino Cloud 41
9.5 Online Resources 41
9.6 Board Recovery 42
10 Certifications Summary 42
11 Declaration of Conformity CE DoC (EU) 42
12 Declaration of Conformity to EU RoHS & REACH 211 01/19/2021
13 Conflict Minerals Declaration 44
14 FCC Caution 44

1 Application Examples

The Plug and Make Kit, featuring the Arduino® UNO R4 WiFi, offers a seamless and user-friendly introduction to IoT and electronics. With its extensive array of modular sensors and components, this kit is designed to simplify project development and enhance learning experiences. The I2C Qwiic cable connectivity ensures quick and easy customization of your projects, making it an ideal choice for a variety of applications. Below are some examples of how this kit can be utilized:

- **Interactive Learning Tools:** The kit's interactive Modulino® nodes, including buttons, RGB LEDs, and buzzers, can be used to create engaging educational tools. Develop projects that teach coding, electronics, and IoT concepts in a hands-on manner. The plug-and-play nature of the kit simplifies setup and reduces the learning curve, making it perfect for classrooms and educational workshops.
- **Environmental Monitoring:** Leverage the kit's sensors to develop a comprehensive environmental monitoring system. Measure and track data such as air quality, temperature, and humidity levels. The kit's modular design facilitates effortless expansion with additional sensors, providing the flexibility to adapt to evolving project requirements. Data can be logged and analyzed through the Arduino® Cloud, providing real-time insights and alerts.
- **Smart Home Automation:** Utilize the kit to build smart home devices that can monitor and control various environmental factors. With sensors for temperature, humidity, and movement, create a system that automates climate control, security, and lighting. The onboard Wi-Fi® allows for remote monitoring and control through the Arduino® Cloud or other third-party services.

2 Features

The Plug and Make Kit offers an intuitive and effortless introduction to the world of IoT and electronics. Featuring the powerful Arduino® UNO R4 WiFi, this kit enables seamless integration with the Arduino® Cloud for a smooth, wireless experience. With its array of modular sensors and components connectable via I2C Qwiic cables, the kit allows for easy customization of your projects. Equipped with a diverse range of sensors and interactive Modulino® nodes, this kit provides the tools you need to create dynamic and engaging projects with ease. Perfect for both beginners and experienced makers.

2.1 Kit Content

SKU	Name	Purpose	Quantity
ABX00080	Arduino® UNO R4 WiFi	Programmable main board	1
ASX00071	Modulino® Base	Base plate for UNO and Modulino® nodes	1
ABX00101	Modulino® Movement	Measure acceleration and rotation	1
ABX00102	Modulino® Distance	Time of flight, finds distances	1
ABX00103	Modulino® Thermo	Measure temperature and humidity	1
ABX00107	Modulino® Knob	Rotary encoder for input	1
ABX00108	Modulino® Buzzer	Produce sound	1
ABX00109	Modulino® Pixels	8x RGB LEDs for display	1
ABX00110	Modulino® Buttons	3x push buttons for input	1

2.2 Accessories

Item Name	Included	Quantity
USB-C® cable	Yes	1
I2C Qwiic cables	Yes	7
M3x10 screws	Yes	24
M3 bolts	Yes	20
M3x20 female spacers	Yes	4

2.3 Microcontroller

Feature	Description
Product Name	Arduino® UNO R4 WiFi
Microcontroller	Renesas RA4M1 (R7FA4M1AB3CFM#AA0)
Clock Speed	48 MHz
Power Supply	6-24 VDC via VIN, 5 VDC via USB-C®
Operating Voltage	5 V (RA4M1)
Memory	256 kB Flash, 32 kB SRAM, 8 kB EEPROM
Peripherals	Capacitive Touch Sensing Unit (CTSU), USB® 2.0 Full-Speed Module, 14-bit ADC, Up to 12-bit DAC, Operational Amplifier (OPAMP)
Communication	1x UART, 1x SPI, 1x I2C, 1x CAN (external transceiver required)
Wi-Fi®	802.11 b/g/n (Wi-Fi® 4), up to 150 Mbps
Bluetooth®	Bluetooth® 5
LED Matrix	12x8 red LEDs, fully programmable
Additional Features	Real-time Clock (RTC), Memory Protection Unit (MPU), DAC, DMA
Certifications	CE/RED, UKCA, FCC, IC, RoHS, REACH, WEEE

3 Related Products

- *SKU: ASX00027* - Arduino® Sensor Kit
- *SKU: K000007* - Arduino® Starter Kit
- *SKU: AKX00026* - Arduino® Oplà IoT Kit

4 Rating

4.1 Recommended Operating Conditions

Symbol	Description	Min	Typ	Max	Unit
V_{IN}	Input voltage from VIN pad / DC Jack	6	7.0	24	V
V_{USB}	Input voltage from USB connector	4.8	5.0	5.5	V
T_{OP}	Operating Temperature	-40	25	85	°C

Note: V_{DD} controls the logic level and is connected to the 5V power rail. V_{AREF} is for the analog logic.

5 Block Diagram

The Plug and Make Kit is a combination of the Arduino UNO R4 Wifi board connected to different Modulino® nodes boards through and I2C bus as can be seen in the following block diagram.

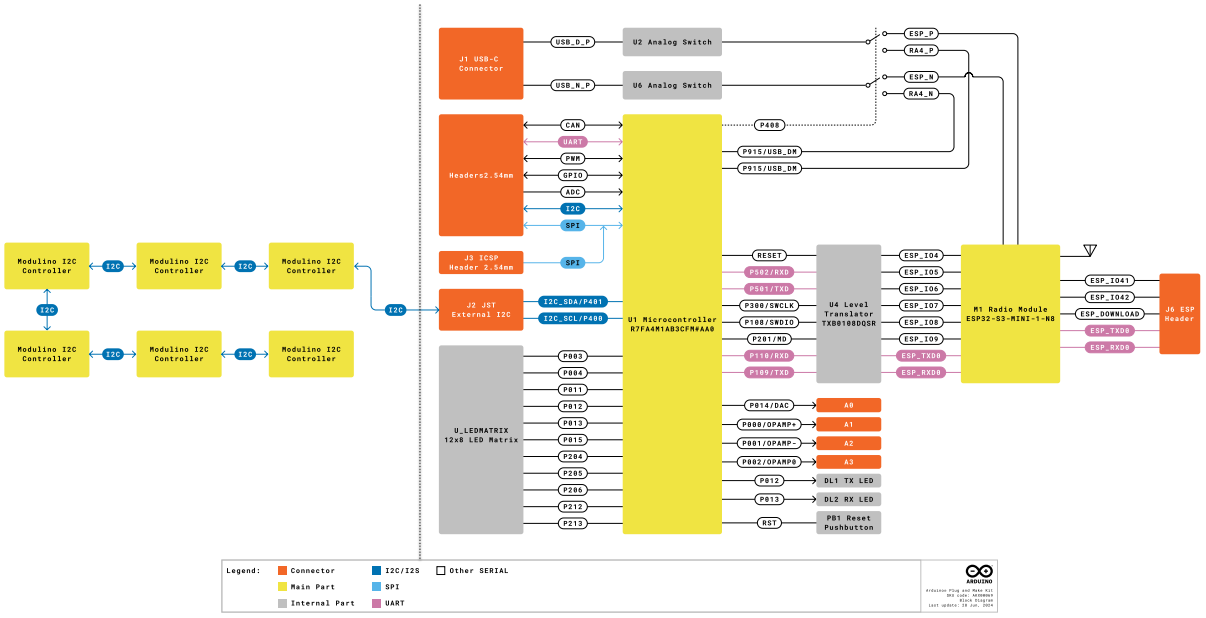

Plug and Make Kit block diagram

6 Functional Overview - Arduino UNO R4 WiFi

6.1 Pinout

The Arduino® UNO R4 WiFi pinout is shown in the following figure.

Pin	Function
GND	Ground
3.3 V	3.3 V Power Rail
5V	5V Power Rail
VIN	Voltage Input
SDA	I2C Data
SCL	I2C Clock
A0	Analog Input 0 / DAC
A1	Analog Input 1 / OPAMP+
A2	Analog Input 2 / OPAMP-
A3	Analog Input 3 / OPAMPOut
A4	Analog Input 4 / I2C Serial Data (SDA)
A5	Analog Input 5 / I2C Serial Clock (SCL)
D0	Digital I/O 0 / UART RX
D1	Digital I/O 1 / UART TX
D2-D13	Digital I/O 2-13
D14 (TXD)	Serial Transmit (UART)
D15 (RXD)	Serial Receive (UART)
CANRX	CAN Receiver (requires external transceiver)
CANTX	CAN Transmitter (requires external transceiver)

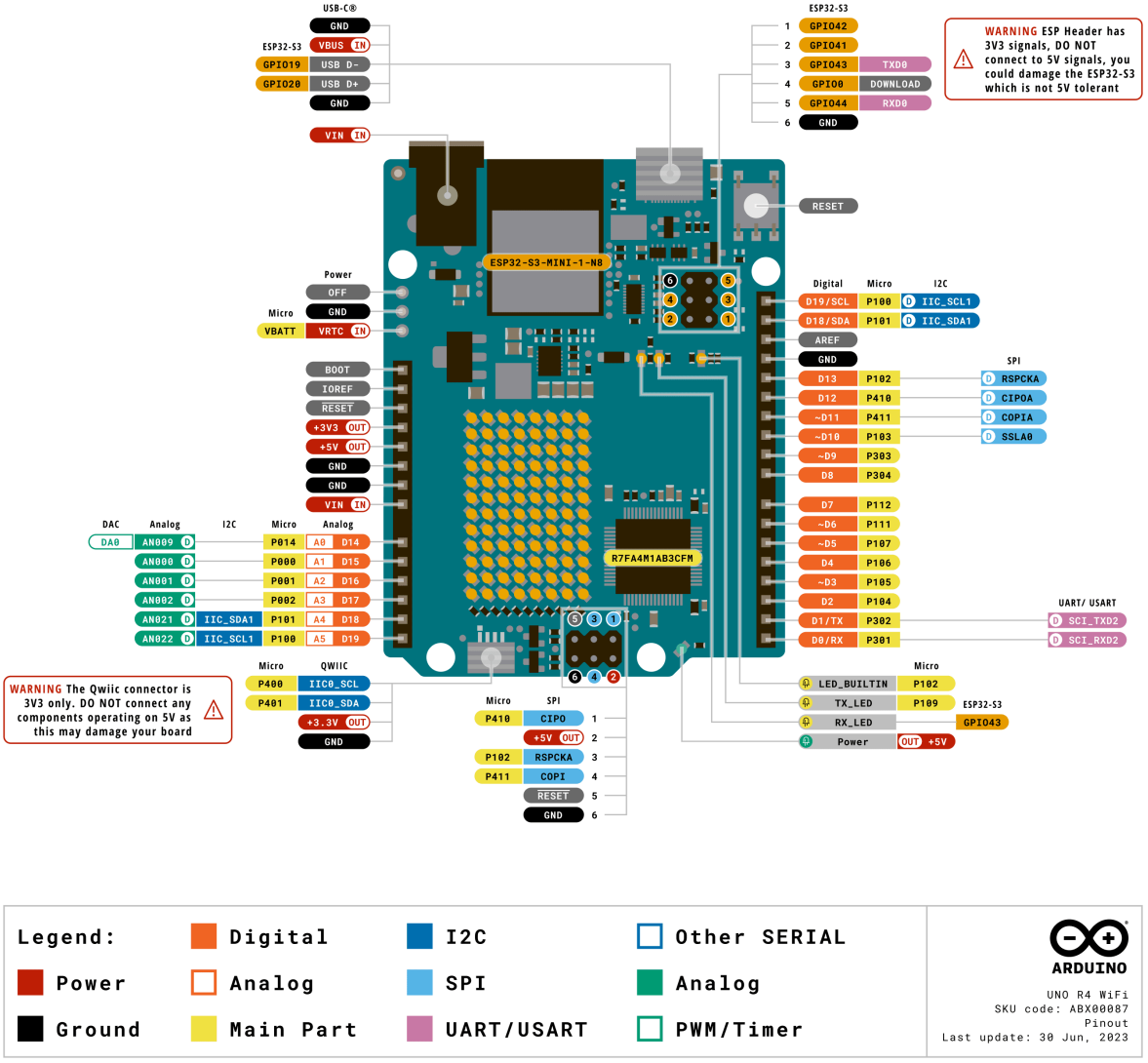

Legend:	Digital	I2C	Other SERIAL
Power	Analog	SPI	Analog
Ground	Main Part	UART/USART	PWM/Timer

ARDUINO

UNO R4 WiFi
SKU code: ABX00087
Pinout
Last update: 30 Jun, 2023

Arduino® UNO R4 WiFi Pinout

6.2 Power Specifications

6.2.1 Supply Options

Power for the Arduino® UNO R4 WiFi can be supplied through either the VIN pin or the USB-C® connector.

- **VIN Pin:** When power is supplied via the VIN pin, the ISL854102FRZ buck converter reduces the voltage to 5 V. This input is protected by Schottky diodes for reverse polarity and overvoltage protection.
- **USB-C Connector:** Power supplied via the USB-C connector provides approximately 4.7 V to the RA4M1 MCU, accounting for the voltage drop due to the Schottky diodes.

6.2.2 Power Tree

The power distribution system ensures proper voltage levels for all components. The ISL854102 buck converter and SGM2205 regulator manage voltage regulation. Diodes for protection are also represented.

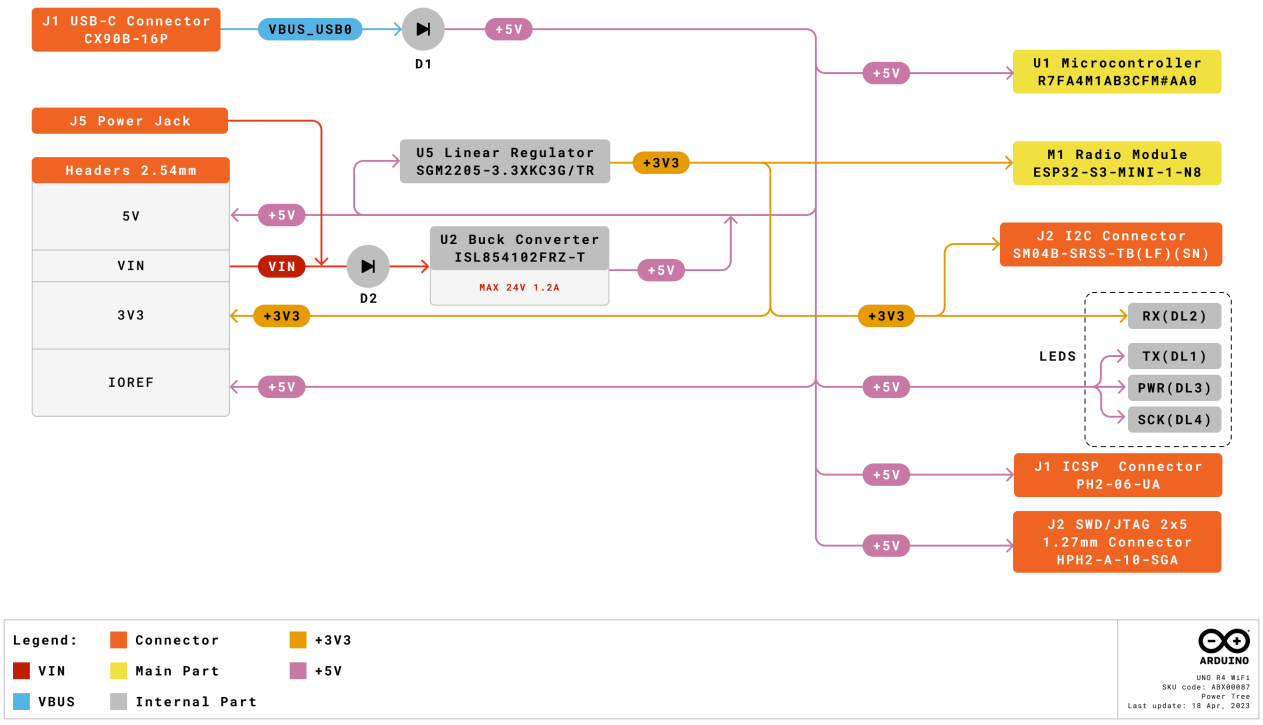

Arduino® UNO R4 WiFi power tree

6.2.3 Pin Specifications

The general operating voltage for UNO R4 WiFi is 5 V while the ESP32-S3 module's operating voltage is 3.3 V.

It is very important that ESP32-S3's pins (3.3 V) do not come in contact with any of the RA4M1's pins (5 V), as this may damage the circuits. The GPIOs on the R7FA4M1AB3CFM#AA0 microcontroller can safely handle up to 8 mA of current. Never connect devices that draw higher current directly to a GPIO as this may damage the circuit. For powering e.g. servo motors, always use an external power supply.

6.3 Mechanical Information

Layout for dimensions and mounting hole locations for secure attachment.

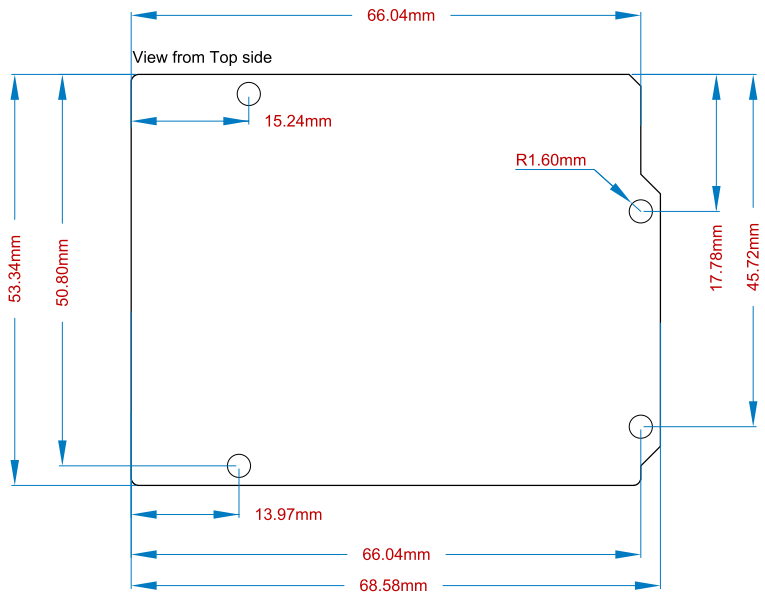

Arduino® UNO R4 WiFi Mechanical Information

7 Modulino® Base

The Modulino® Base is designed to provide a stable and secure mounting solution for your Arduino® UNO R4 WiFi and additional nodes. Measuring 140x140x1.6 mm with 3.5 mm holes, it ensures that your setup remains firm and organized, making it easier to manage your components and connections.

7.1 Mechanical Information

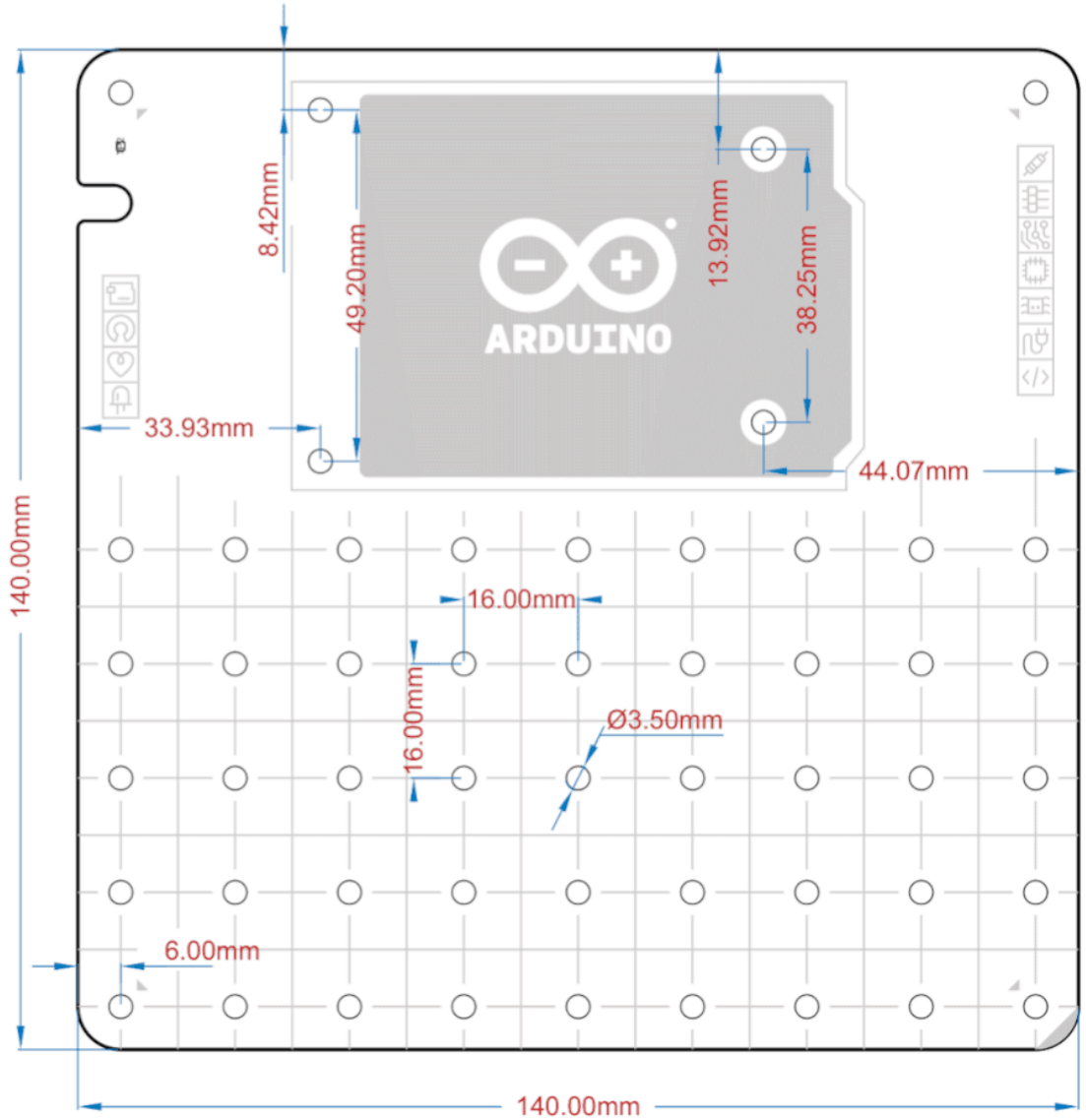

Modulino® Base Mechanical information

Specification	Details
Dimensions	140x140x1.6 mm
Holes size (diameter)	3.5 mm

8 Modulino® Nodes

The Modulino® nodes offer a versatile and user-friendly introduction to IoT and electronics. Designed for seamless integration, these nodes allow for easy expansion with additional sensors and components, providing a flexible platform to meet diverse project requirements. The Modulino® nodes can be easily connected using Qwiic cables, enabling straightforward daisy-chaining of multiple nodes via I2C. This design makes it perfect for both beginners and advanced users, enabling them to experiment and create with ease.

8.1 General Characteristics

The Modulino® nodes provide a straightforward introduction to IoT and electronics. These nodes connect easily using Qwiic cables for I2C communication, simplifying the setup. This modular design is ideal for both beginners and experienced users.

All Modulino® nodes share common features such as standardized connectors, blue solder mask, and consistent mechanical dimensions and hole locations, ensuring compatibility.

8.1.1 Mechanical Information

- Board dimensions: 41 mm x 25.36 mm
- Board thickness: 1.6 mm, tolerance ± 0.2 mm
- 4 mounting holes, nominal diameter 3.2 mm, tolerance -0 mm, +0.2 mm
- Hole-to-hole quotes: 16 mm vertical, 32 mm horizontal
- Green power LED powered by 3V3 net, with 1 kΩ series resistor
- Power LED nominal current consumption: 1mA ≈ (3.3 V - 2.2 V) / 1 kΩ

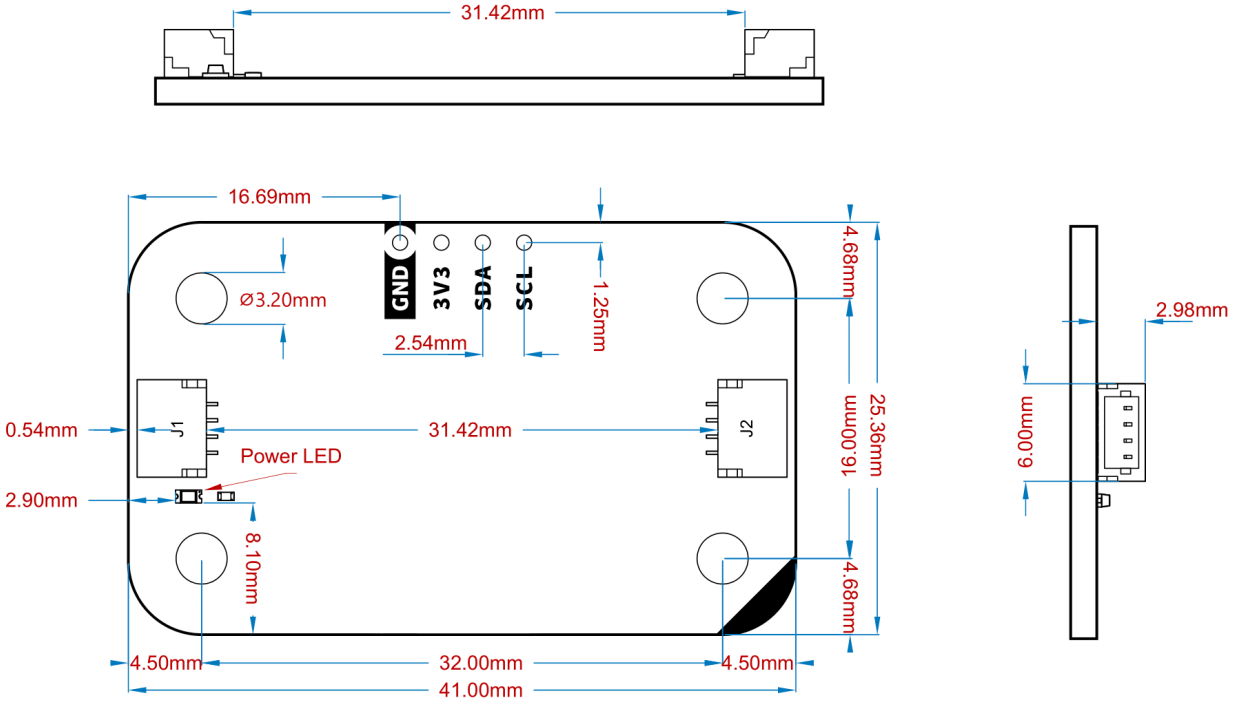

8.1.2 I2C Side Connectors

All Modulino® nodes have at least two 4-pin surface mount connectors from the JST SM Series with a 1.0 mm pitch. These connectors are used to connect nodes between them and to the microcontroller.

8.1.3 I2C Address Reference

Each Modulino® node of the kit is designed to be connected to the Arduino® UNO R4 WiFi microcontroller using the Qwiic connectors available on both sides of the Modulino® nodes. The first node is connected to the microcontroller while the rest are connected to the latest one creating a physical "daisy-chain" connection that, from the communication point of view, is an I2C bus line where all the devices are connected acting the Arduino® UNO R4 WiFi as the controller and the Modulino® nodes as the targets.

In the case multiple nodes of the same kind are connected to the I2C "daisy-chain", they may have the same I2C default address, causing communication problems. All Modulino® nodes are designed to have the possibility of having different I2C addresses via hardware or firmware changes as presented in the following table.

Board Silk Name	Sensor/Actuator	Modulino® I2C Address (HEX)	Editable Addresses (HEX)	Hardware I2C Address (HEX)
MODULINO MOVEMENT	LSM6DSOXTR	0x6A	0x6A, 0x6B (via solder jumper)	0x6A & 0x7E
MODULINO DISTANCE	VL53L4CDV0DH/1	0x29	Any custom address (via software configuration)	0x29
MODULINO THERMO	HS3003	0x44	Any custom address (via software configuration)	0x44
MODULINO BUZZER	PKLCS1212E4001	0x3C	Any custom address (via software configuration)	0x1E
MODULINO KNOB	PEC11J-9215F-S0015	0x76	Any custom address (via software configuration)	0x3A
MODULINO PIXELS	Eight LC8822-2020	0x6C	Any custom address (via software configuration)	0x36
MODULINO BUTTONS	Three SPST Push Buttons	0x7C	Any custom address (via software configuration)	0x3E

Please note: When scanning for I2C addresses connected to the bus, the boards might identify themselves using the **Hardware I2C Address** listed in the last column of the table. However, you should always use the **Modulino® I2C Address** provided in your code if using the official Modulino® library.

With the provided software, users can change the default I2C address of the dedicated I2C interface controller firmware. Assigning different addresses allows users to connect multiple boards of the same type in a chain. To facilitate this, a white rectangle is positioned on the bottom silk of the board, where users can write the new I2C address directly on the board itself.

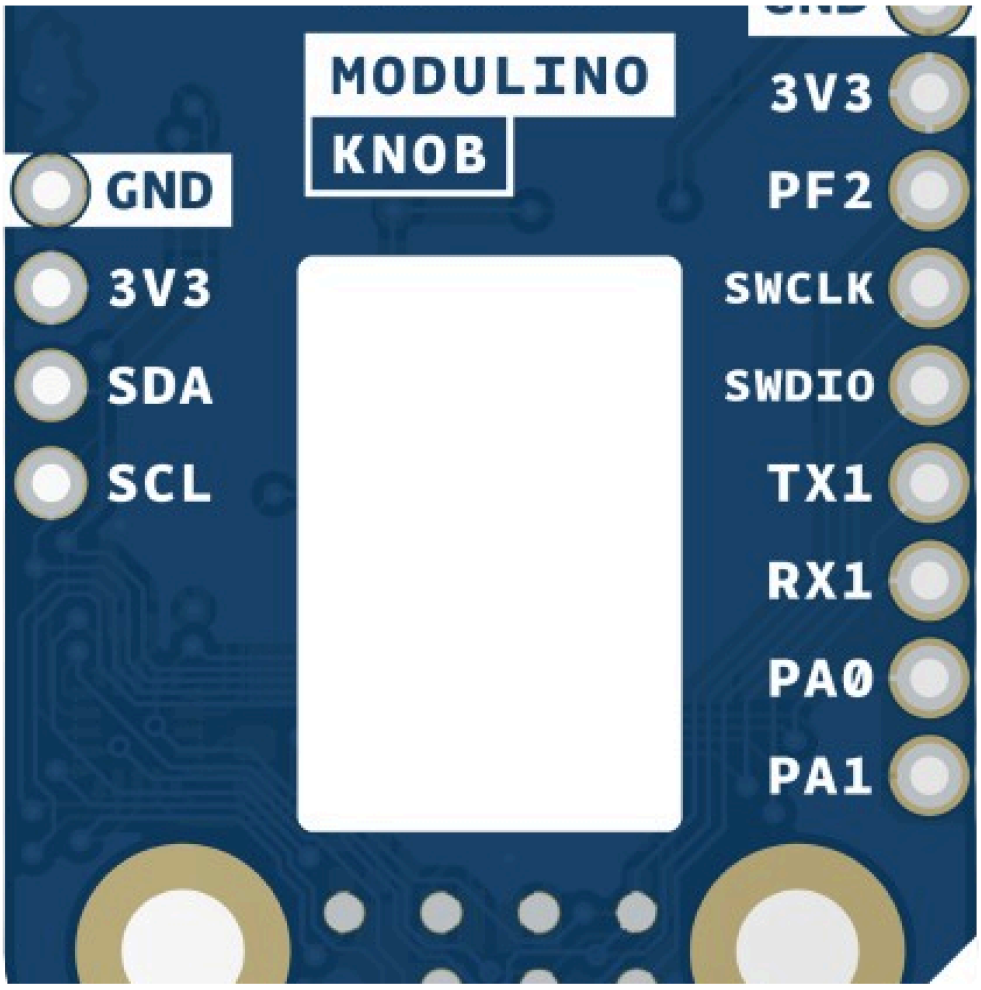

Blank silk for identification

Note: The maximum number of Modulino® nodes that can be connected together using this configuration is dependent on the power source and total consumption of the system plus the total length of the cables used. In our tests the maximum number of Modulino® nodes connected together and powered via the USB Type-C of the microcontroller is approximately 50 nodes.

8.2 Modulino® Nodes With Dedicated I2C Interface Controller

These nodes use an additional chip to handle I2C communication when there is a lack of native I2C support, ensuring the experience is consistent across every Modulino® node within the Plug and Make Kit.

8.2.1 Pull-up Resistors

These nodes have pads for optional I2C pull-up mounting in both data lines to avoid communication problems in case the I2C bus is not working as it should. No resistors are mounted by default but in case the resistors are need 4.7 K resistors in an SMD 0402 format are recommended.

These are positioned near the Qwiic connector on the power LED side except on the Modulino® Buttons where it can be found between the button B and C.

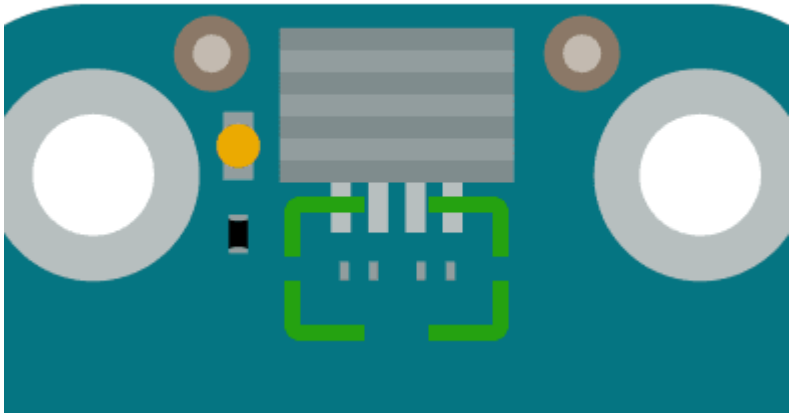

Generic pull-up resistor position

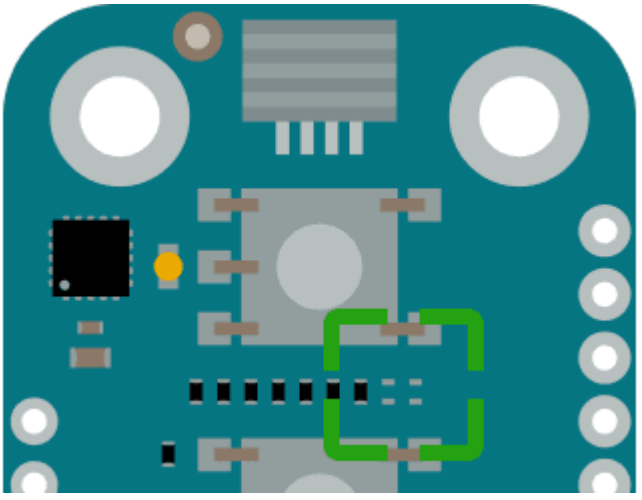

Pull-up resistor positions for Modulino® Buttons

8.3 Modulino® Movement

The Modulino® Movement, featuring the LSM6DSOXTR sensor, measures acceleration, rotation, and temperature, providing comprehensive data for motion detection applications. It's ideal for projects involving gesture recognition, pedometers, and vibration monitoring.

8.3.1 Technical Specifications

Specification	Details
Sensor	LSM6DSOXTR
Supply Voltage	Min: 1.71 V, Max: 3.6 V
Power Consumption	Accel: 170 µA, Gyro: 0.55 mA
Range	±125 dps to ±2000 dps
Accuracy	Accel: ±20 mg, Gyro: ±1 dps
Resolution	Accel: 0.061 mg/LSB to 0.488 mg/LSB, Gyro: 4.375 mdps/LSB to 70 mdps/LSB
Communication	SPI, I2C, MIPI I3CSM

8.3.2 Pinout

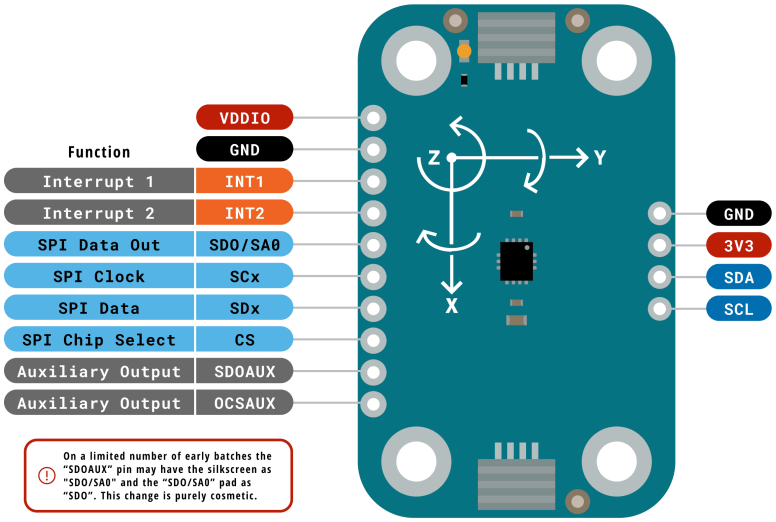

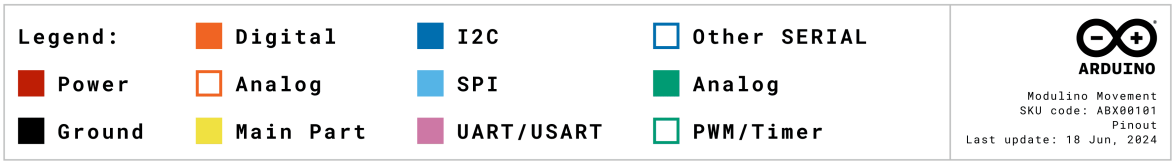

Modulino® Movement Pinout

1x4 Header

Pin	Function
GND	Ground
3.3 V	Power Supply
SDA	I2C Data
SCL	I2C Clock

The above pads are generic to all Modulino® nodes and they are on the same bus as the Qwiic connectors. These provide a place to mount header pins if desired.

1x10 Header with LSM6DSOXTR signals

Pin	Function
VDDIO	3.3 V (cuttable)
GND	Ground
INT1	Interrupt 1 (Sensor)
INT2	Interrupt 2 (Sensor)
SDO/SA0	SPI Data Out / I2C Addr
SDX	SPI Data X
SCX	SPI Clock X
CS	SPI Chip Select
SDOAUX	Auxiliary Output
OCSAUX	Auxiliary Output

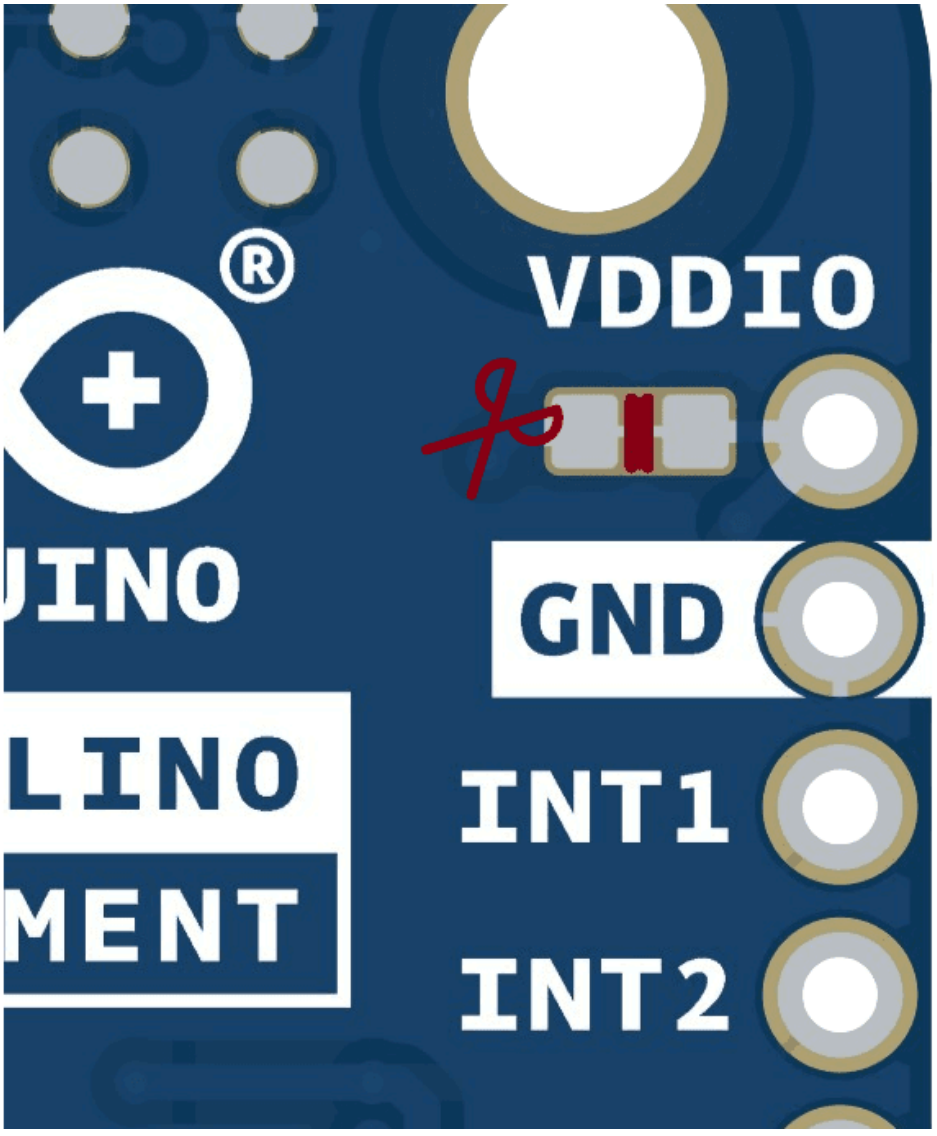

Cuttable jumper for VVDIO

It is possible to make VDDIO independent from the 3.3 V power net by cutting its solder jumper.

8.3.3 Mechanical Information

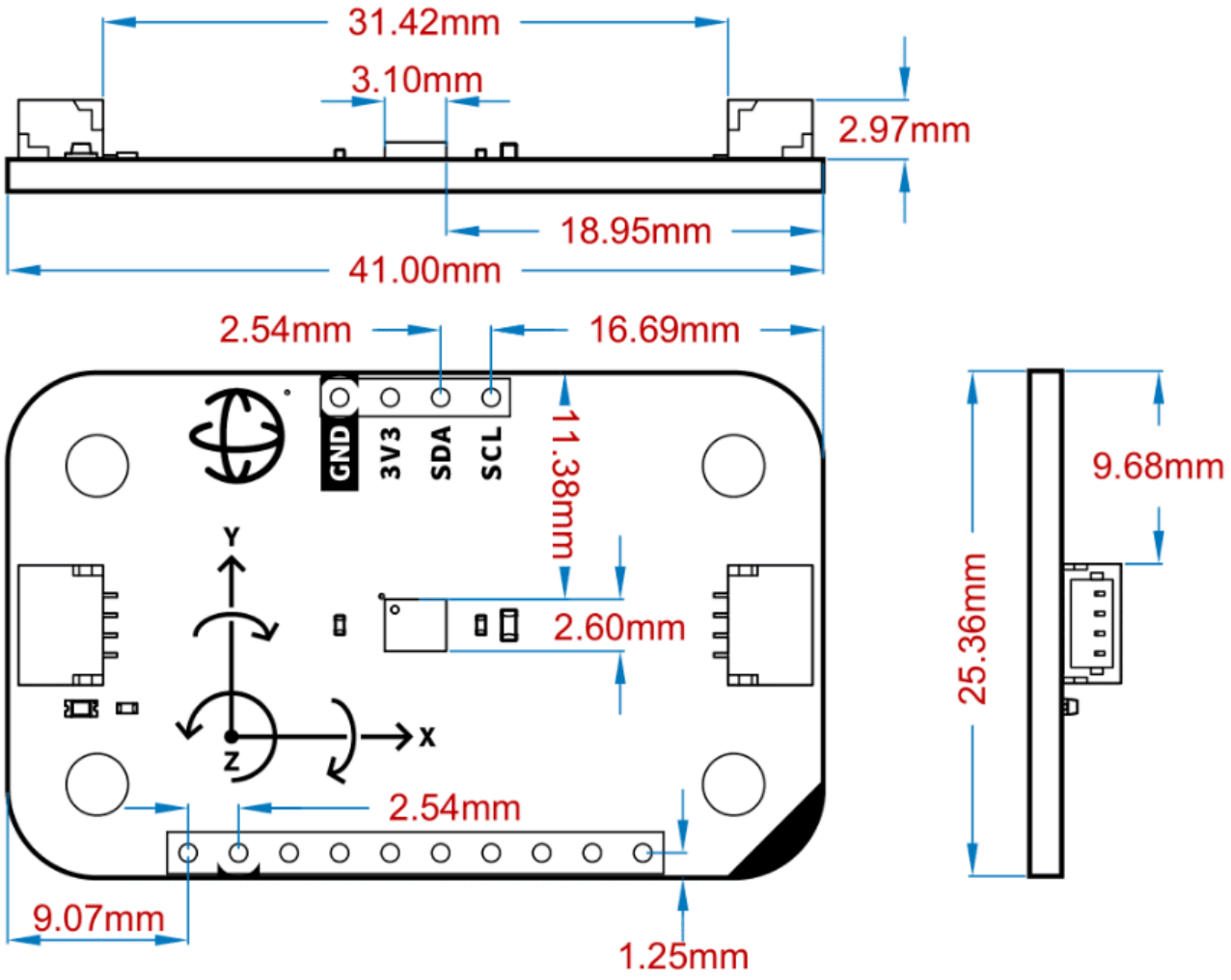

Modulino® Movement Mechanical Information

8.4 Modulino® Distance

The Modulino® Distance, featuring the VL53L4CDV0DH/1 sensor, provides accurate distance measurements using time-of-flight technology. It's perfect for applications requiring precise distance sensing, such as robotics and proximity sensors.

8.4.1 Technical Specifications

Specification	Details
Sensor	VL53L4CDV0DH/1
Supply Voltage	Min: 2.6 V, Max: 3.5 V
Power Consumption	40 mA (peak), 24 mA active ranging, 4 mA I2C
Range	0 to 1200 mm
Accuracy	±7 mm to ±3%
Resolution	1 mm
Communication	I2C

8.4.2 Pinout

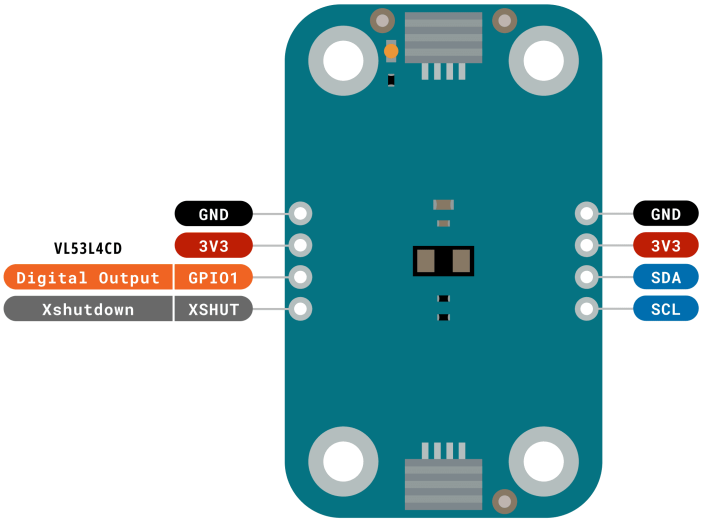

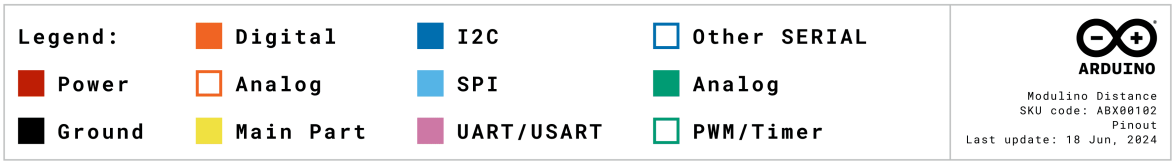

Modulino® Distance Pinout

1x4 Header

Pin	Function
GND	Ground
3.3 V	Power Supply
SDA	I2C Data
SCL	I2C Clock

The above pads are generic to all Modulino® nodes and they are on the same bus as the Qwiic connectors. These provide a place to mount header pins if desired.

1x4 Header with VL53L4CDV0DH/1 signals

Pin	Function
GPIO1	Digital output (Distance Sensor)
XSHUT	Shutdown (Distance Sensor)

These provide a place to mount header pins if desired. GPIO1 open-drain interrupt output, with onboard 10 kΩ pullup resistor to 3.3 V. XSHUT actives low digital input with onboard 10 kΩ pullup resistor to 3.3 V.

8.4.3 Mechanical Information

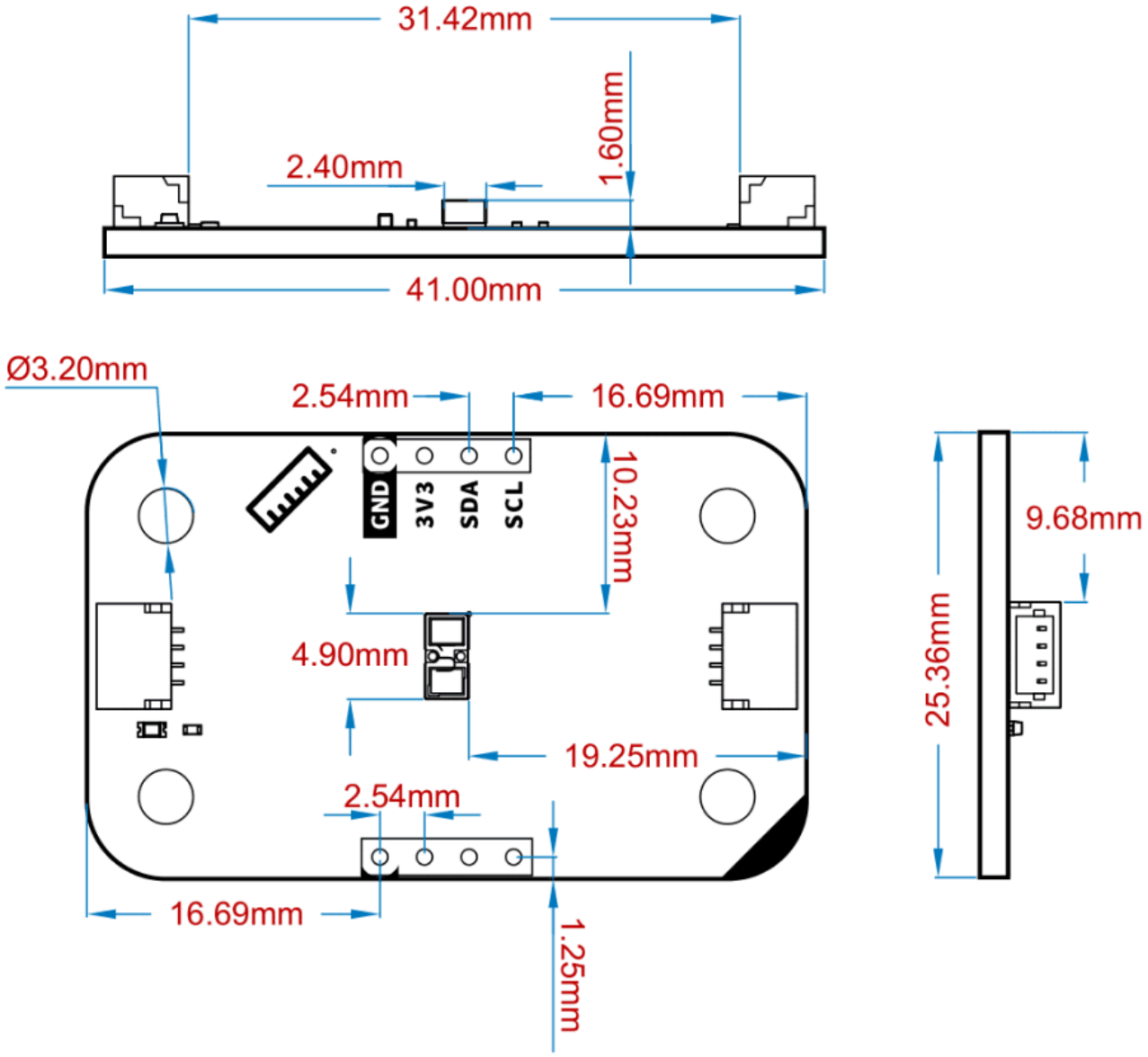

Modulino® Distance Mechanical Information

8.5 Modulino® Thermo

The Modulino® Thermo, featuring the HS3003 sensor, measures both temperature and humidity. It's suitable for environmental monitoring and climate control applications.

8.5.1 Technical Specifications

Specification	Details
Sensor	HS3003
Supply Voltage	Min: 2.3 V, Max: 5.5 V
Power Consumption	24.4 µA (14-bit resolution, 3.3 V supply)
Range	0% to 100% RH, -40°C to +125°C
Accuracy	Humidity: ±2.8%RH, Temperature: ±0.25°C
Resolution	Humidity: 14-bit, Temperature: 14-bit
Communication	I2C

8.5.2 Pinout

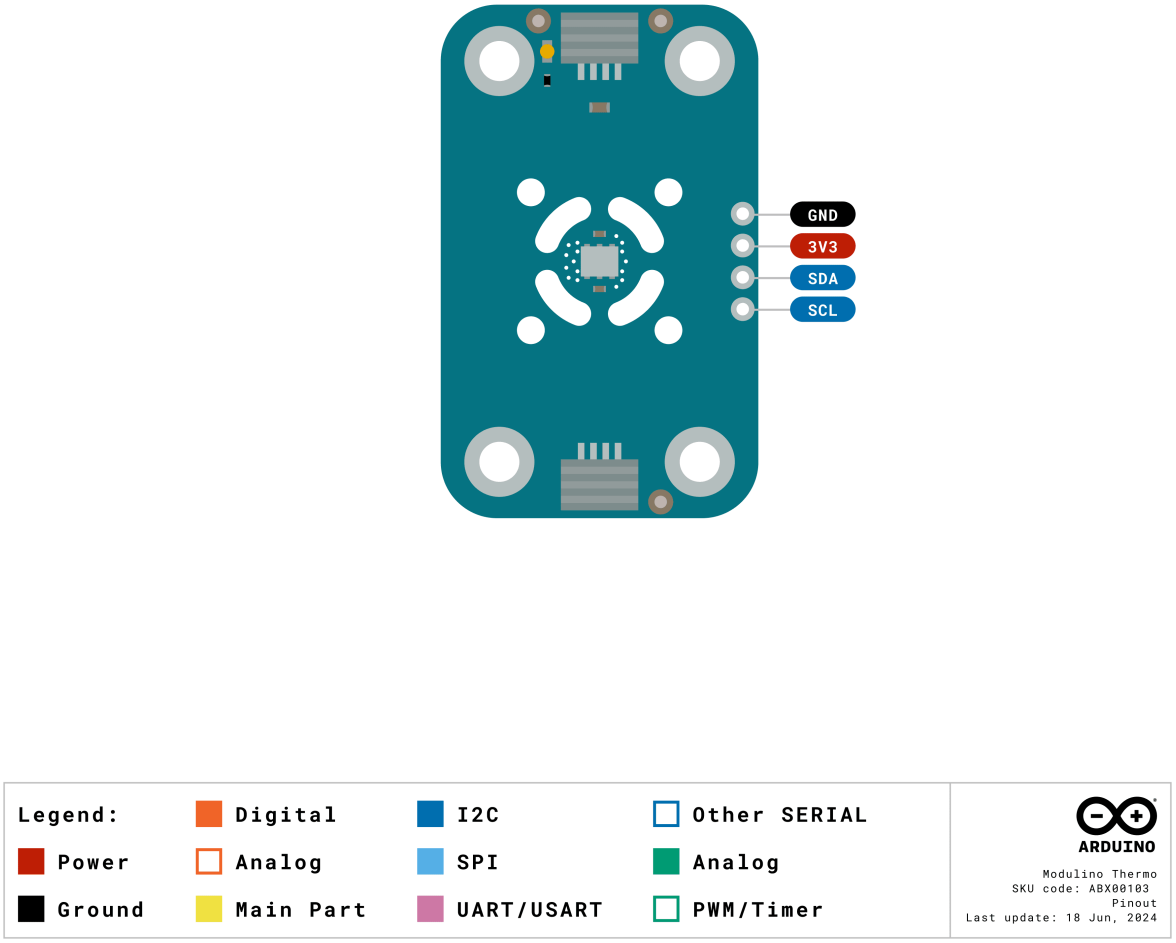

Modulino® Thermo Pinout

1x4 Header

Pin	Function
GND	Ground
3.3 V	Power Supply
SDA	I2C Data
SCL	I2C Clock

The above pads are generic to all Modulino® nodes and they are on the same bus as the Qwiic connectors. These provide a place to mount header pins if desired.

8.5.3 Mechanical Information

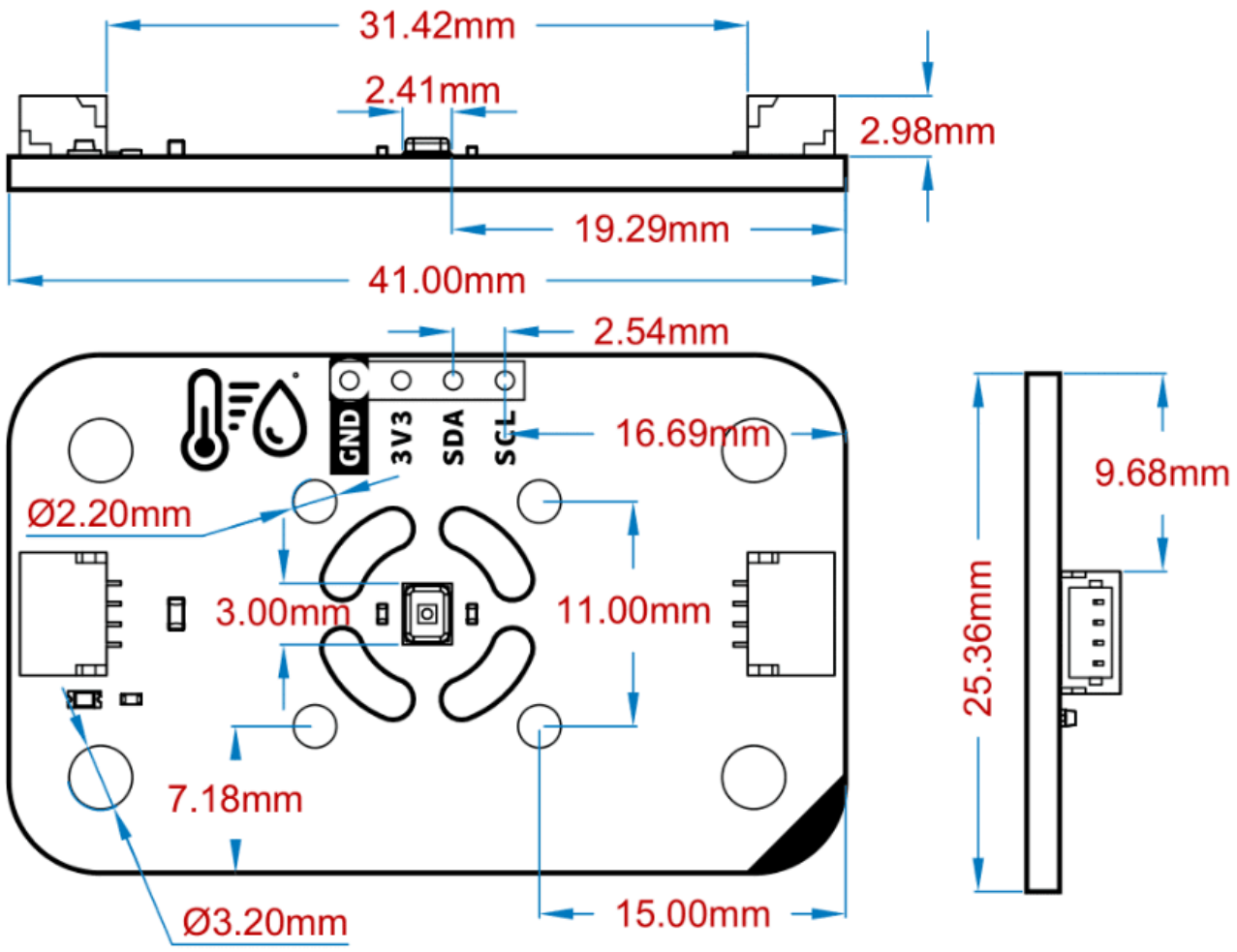

8.6 Modulino® Knob

The Modulino® Knob includes a quadrature rotary encoder with an SPST switch, using the STM32C011F4 chip for digital communication. This setup allows precise control for user interfaces and adjustments in various applications. All of the Modulino® nodes that use dedicated I2C interface controllers have the footprints to provide the option to mount I2C pullup resistors, but no resistors are mounted.

8.6.1 Technical Specifications

Specification	Details
Sensor	Quadrature Rotary Encoder
Microcontroller	STM32C011F4
Supply Voltage	Min: 2.0 V, Max: 3.6 V
Power Consumption	3.4 mA
Range	360°
Accuracy	Internal Oscillator: ±1%
Resolution	12-bit ADC
Communication	I2C, USART, SPI, I2S

8.6.2 Pinout

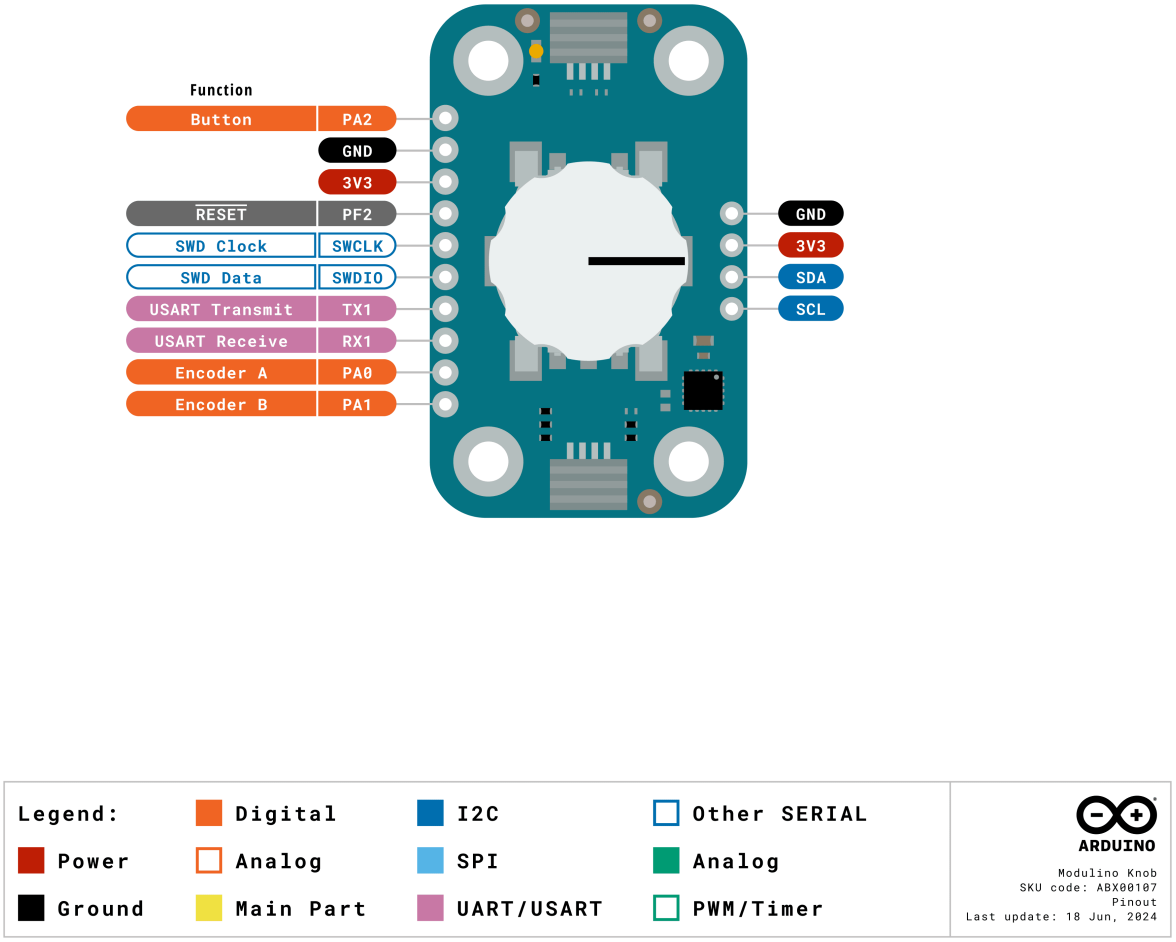

Modulino® Knob Pinout

1x4 Header

Pin	Function
GND	Ground
3.3 V	Power Supply
SDA	I2C Data
SCL	I2C Clock

The above pads are generic to all Modulino® nodes and they are on the same bus as the Qwiic connectors. These provide a place to mount header pins if desired.

1x10 Header for Encoder signals

Pin	Function
PA0	PinA (Encoder)
PA1	PinB (Encoder)
PA2	Switch (Encoder)
RX1	UART Receive
TX1	UART Transmit
SWDIO	SWD Data
SWCLK	SWD Clock
PF2	NRST

This header can be used to read the encoder from an external controller, to use the dedicated I2C IC for other purposes, or to reprogram the chip its SWD interface. These provide a place to mount header pins if desired.

8.6.3 Mechanical Information

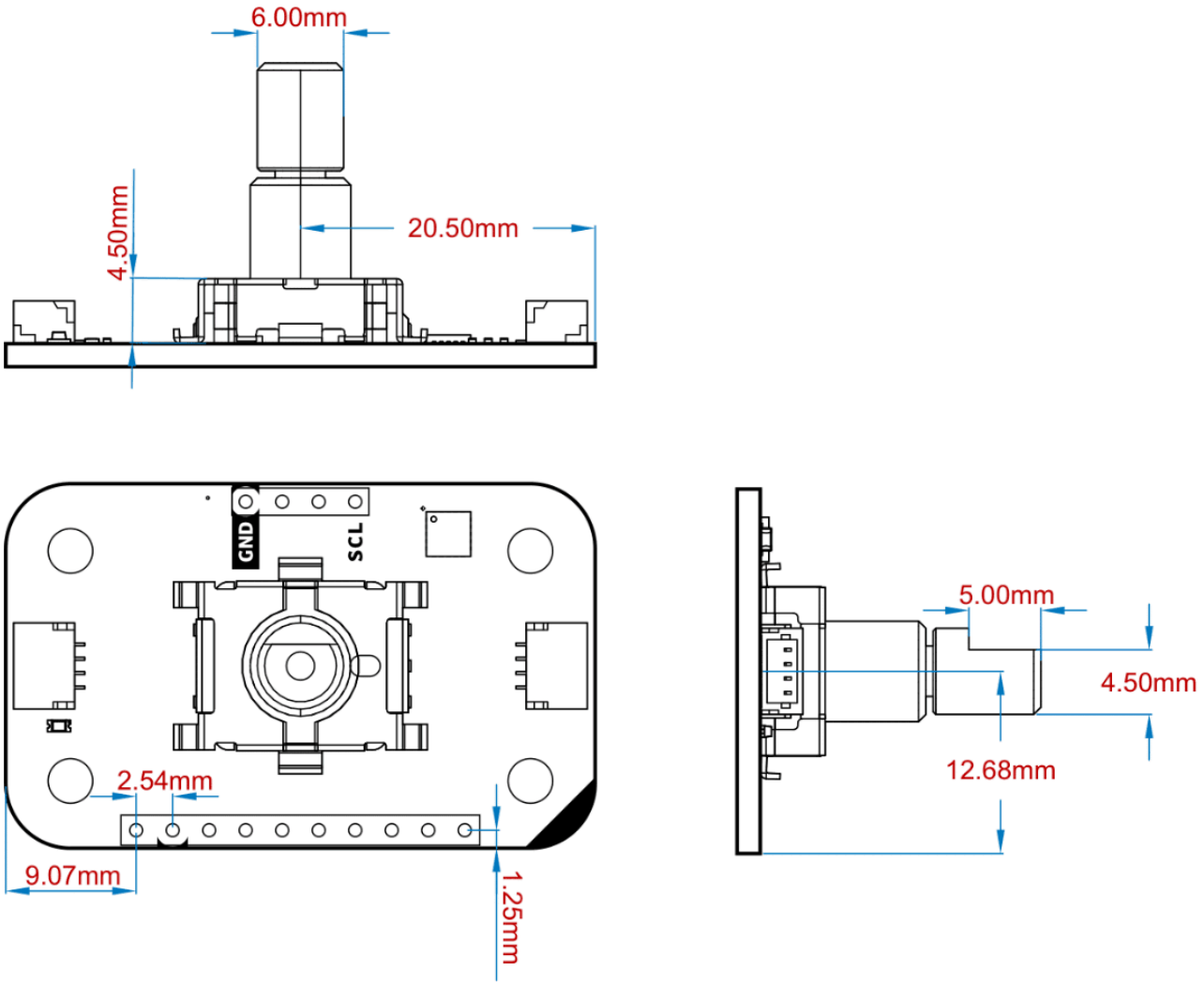

8.7 Modulino® Buzzer

The Modulino® Buzzer contains a single buzzer and uses the STM32C011F4 chip for digital communication, making it suitable for producing sound alerts and notifications in various projects. All of the Modulino® nodes that use dedicated I2C interface controllers have the footprints to provide the option to mount I2C pullup resistors, but no resistors are mounted.

8.7.1 Technical Specifications

Specification	Details
Actuator	1x Buzzer
Microcontroller	STM32C011F4
Supply Voltage	Min: 2.0 V, Max: 3.6 V
Power Consumption	6.4 mA
Accuracy	ADC: ±2 LSB typical INL
Resolution	12-bit ADC
Communication	I2C

8.7.2 Pinout

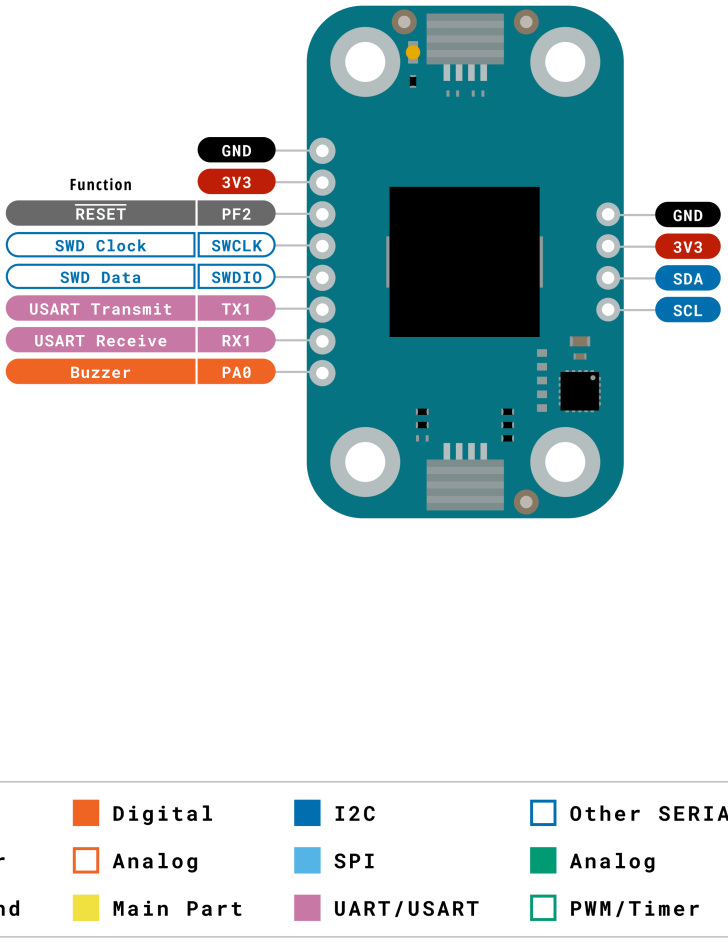

Modulino® Buzzer Pinout

1x4 Header

Pin	Function
GND	Ground
3.3 V	Power Supply
SDA	I2C Data
SCL	I2C Clock

The above pads are generic to all Modulino® nodes and they are on the same bus as the Qwiic connectors. These provide a place to mount header pins if desired.

1x8 Header for Buzzer and I2C interface chip signals

Pin	Function
PA0	Buzzer Signal
RX1	UART Receive
TX1	UART Transmit
SWDIO	SWD Data
SWCLK	SWD Clock
PF2	NRST

This header can be used to actuate the buzzer from an external 3.3 V source, to use the dedicated I2C IC for other purposes, or to reprogram the chip its SWD interface. These provide a place to mount header pins if desired.

8.7.3 Mechanical Information

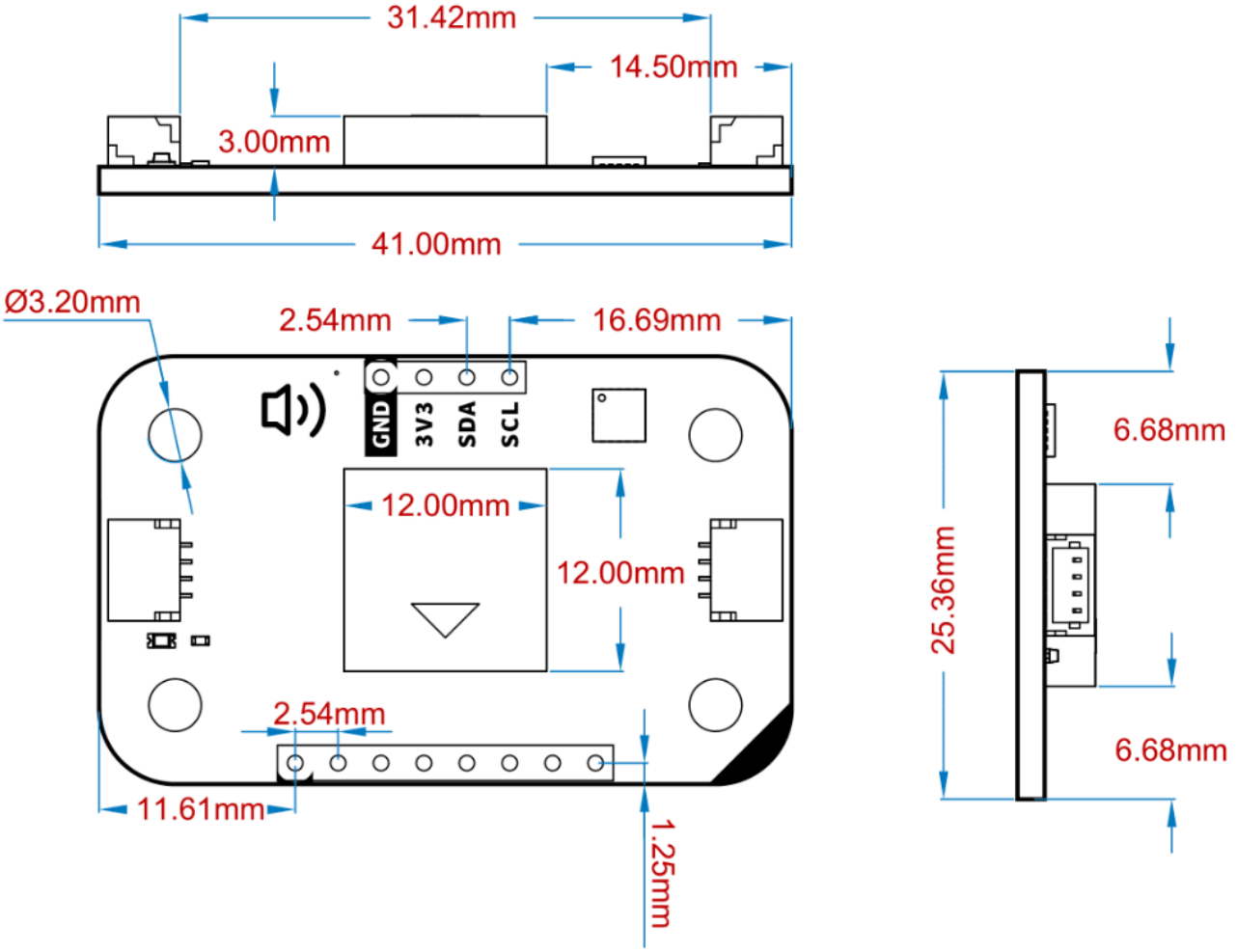

8.8 Modulino® Pixels

The Modulino® Pixels includes eight LC8822-2020 RGB LEDs and uses the STM32C011F4 chip for digital communication, perfect for creating colorful displays and lighting effects in your projects. All of the Modulino® nodes that use dedicated I2C interface controllers have the footprints to provide the option to mount I2C pullup resistors, but no resistors are mounted.

8.8.1 Technical Specifications

Specification	Details
Actuator	Eight LC8822-2020
Microcontroller	STM32C011F4
Supply Voltage	Min: 2.0 V, Max: 3.6 V
Power Consumption	33mA @ 3.3 V * 8 + 3.4 mA
Resolution	12-bit ADC
Communication	I2C, USART, SPI, I2S

8.8.2 Pinout

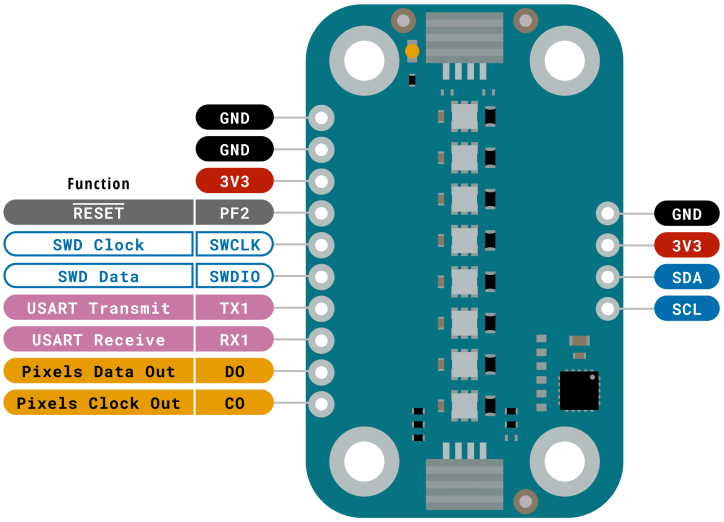

Modulino® Pixels Pinout

1x4 Header

Pin	Function
GND	Ground
3.3 V	Power Supply
SDA	I2C Data
SCL	I2C Clock

The above pads are generic to all Modulino® nodes and they are on the same bus as the Qwiic connectors. These provide a place to mount header pins if desired.

1x10 Header for LC8822-2020 and I2C interface controller

Pin	Function
CO	Clock Out
DO	Data Out
RX1	UART Receive
TX1	UART Transmit
SWDIO	SWD Data
SWCLK	SWD Clock
PF2	NRST

The header can be used to add more LC8822-2020 RGB's LED in a daisy chain configuration.

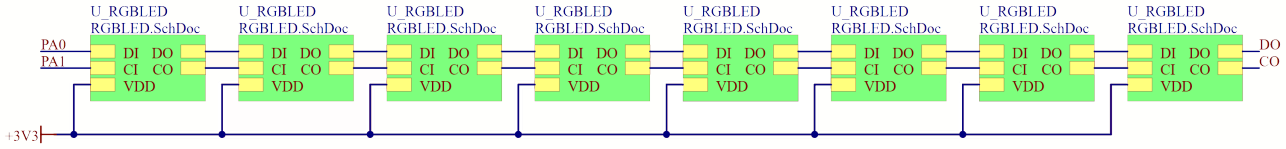

Built-in LEDs open for extension

It also has other I2C interface controller IC pins usable for other purposes or for reprogramming it using its SWD interface. These provide a place to mount header pins if desired.

8.8.3 Mechanical Information

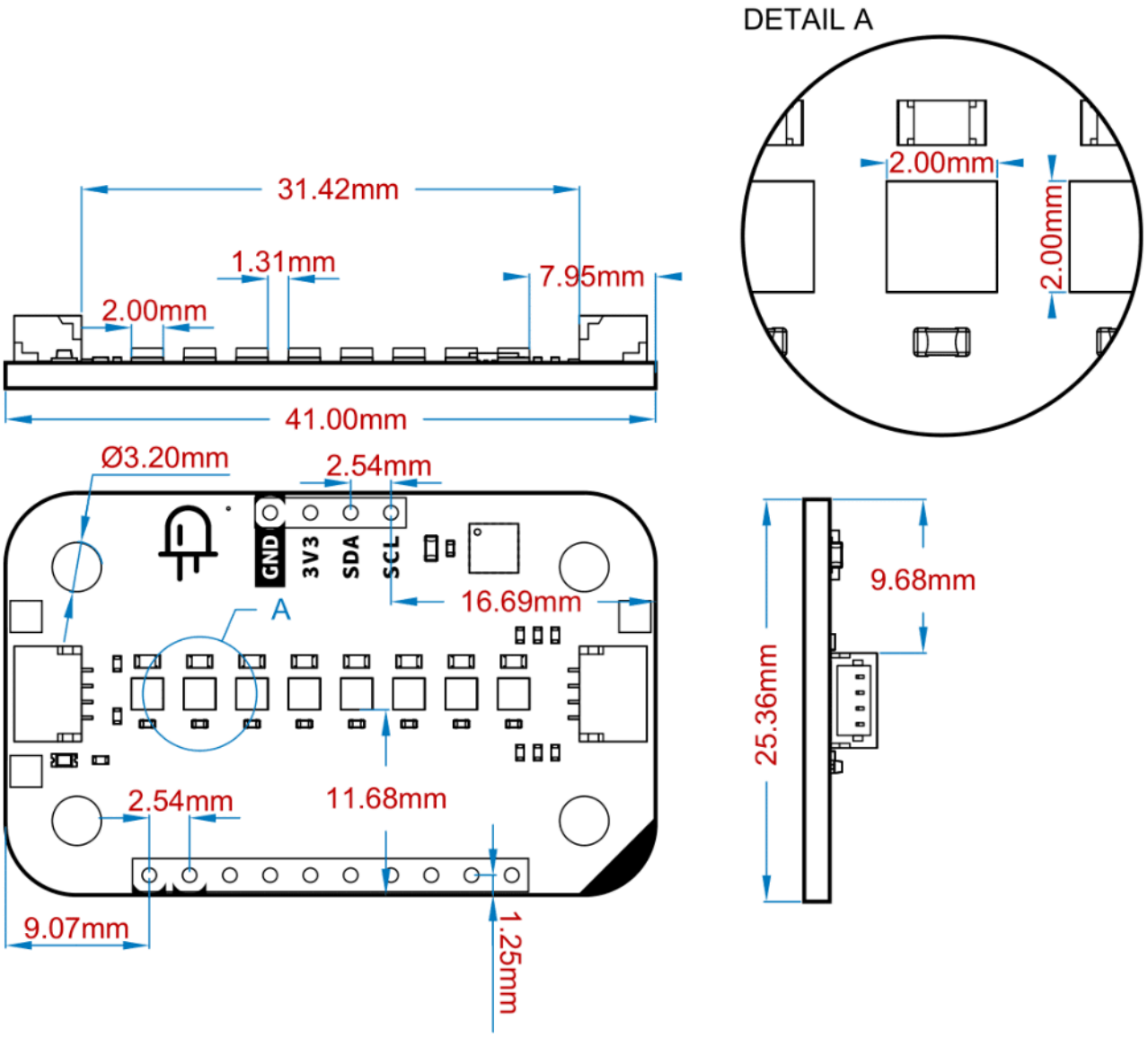

Mechanical information for Modulino® Pixels

8.9 Modulino® Buttons

The Modulino® Buttons includes three SPST push buttons and three yellow LEDs, using the STM32C011F4 chip for digital communication. It's ideal for creating interactive input interfaces. All of the Modulino® nodes that use dedicated I2C interface controllers have the footprints to provide the option to mount I2C pullup resistors, but no resistors are mounted.

8.9.1 Technical Specifications

Specification	Details
Sensor	3x SPST Push Buttons
Microcontroller	STM32C011F4
Supply Voltage	Min: 2.0 V, Max: 3.6 V
Power Consumption	2.5 mA * 3 + 3.4 mA
Accuracy	ADC: ±2 LSB typical INL
Resolution	12-bit ADC
Communication	I2C, USART, SPI, I2S

8.9.2 Pinout

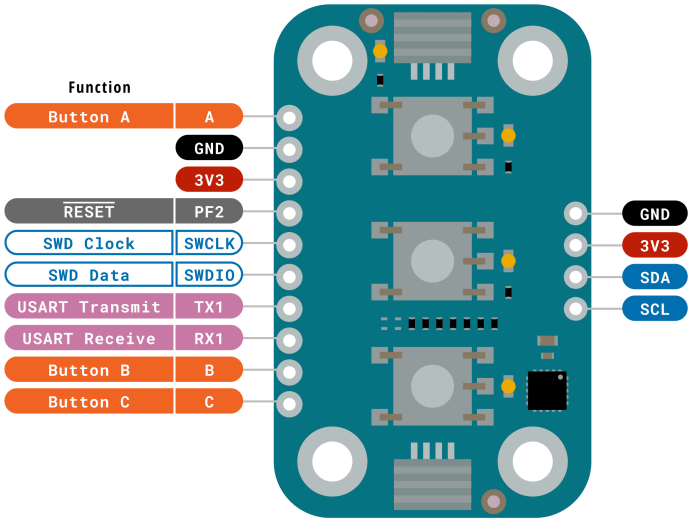

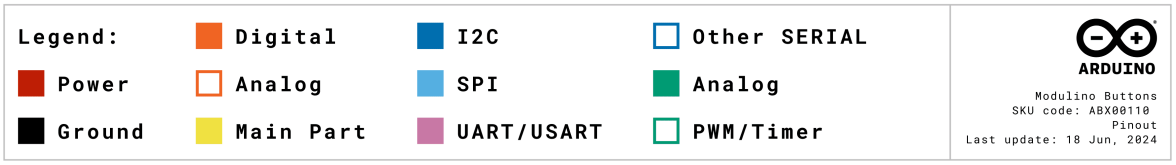

Modulino® Buttons Pinout

1x4 Header

Pin	Function
GND	Ground
3.3 V	Power Supply
SDA	I2C Data
SCL	I2C Clock

The above pads are generic to all Modulino® nodes and they are on the same bus as the Qwiic connectors. These provide a place to mount header pins if desired.

1x10 Header for Push button and I2C interface controller

Pin	Function
PA0	A (Push-button)
PA1	B (Push-button)
PA2	C (Push-button)
RX1	UART Receive
TX1	UART Transmit
SWDIO	SWD Data
SWCLK	SWD Clock
PF2	NRST

This header can be used to read the push-button status from an external 3.3 V controller, to use the I2C interface IC pins for other purposes, or to reprogram it using the SWD interface. These provide a place to mount header pins if desired.

8.9.3 Mechanical Information

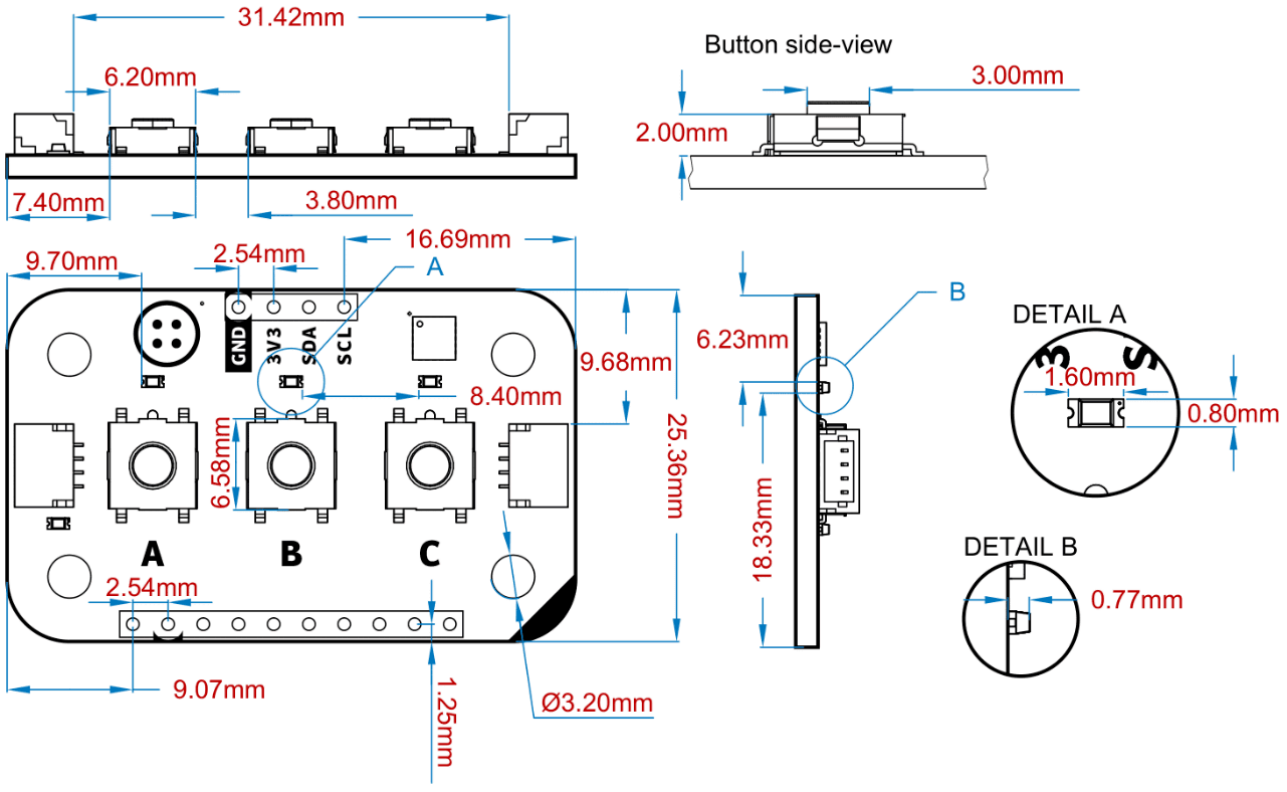

Modulino® Buttons Mechanical Information

9 Device Operation

9.1 Getting Started - IDE

If you want to program your Arduino® Plug and Make Kit while offline you need to install the Arduino® Desktop IDE **[1]**. To connect the **Arduino® UNO R4 WiFi** to your computer, you will need a USB-C® cable, which can also provide power to the board, as indicated by the LED (DL1).

9.2 Getting Started - The Plug and Make Kit

To learn more about how to use this kit and quickly build useful and interesting projects with it, please refer to the dedicated course available at **[2]** as well as the official documentation **[3]**.

9.3 Getting Started - Arduino Cloud Editor

All Arduino® boards, including this one, work out-of-the-box on the Arduino® Cloud Editor **[4]**, by just installing a simple plugin.

The Arduino® Cloud Editor is hosted online, therefore it will always be up-to-date with the latest features and support for all boards. Follow **[5]** to start coding on the browser and upload your sketches onto your board.

9.4 Getting Started - Arduino Cloud

All Arduino® IoT enabled products are supported on Arduino® Cloud which allows you to log, graph, analyze sensor data, trigger events, and automate your home or business.

9.5 Online Resources

Now that you have gone through the basics of what you can do with the board you can explore the endless possibilities it provides by checking exciting projects on ProjectHub **[6]**, the Arduino® Library Reference **[7]**, and the online store **[8]**; where you will be able to complement your board with sensors, actuators and more.

9.6 Board Recovery

All Arduino® boards have a built-in bootloader which allows flashing the board via USB. In case a sketch locks up the processor and the board is not reachable anymore via USB, it is possible to enter bootloader mode by double-tapping the reset button right after the power-up.

Certifications

10 Certifications Summary

Certification	Status
CE/RED (Europe)	Certified
UKCA (UK)	Certified
FCC (USA)	Certified
IC (Canada)	Certified
RoHS	Certified
REACH	Certified
WEEE	Certified

11 Declaration of Conformity CE DoC (EU)

We declare under our sole responsibility that the products above are in conformity with the essential requirements of the **Radio Equipment Directive (RED) 2014/53/EU** and **RoHS Directive 2011/65/EU** and therefore qualify for free movement within markets comprising the European Union (EU) and European Economic Area (EEA).

The full text of the EU Declaration of Conformity is available at the following link:

- Product Compliance list(https://docs.arduino.cc/certifications/).

12 Declaration of Conformity to EU RoHS & REACH 211 01/19/2021

Arduino boards are in compliance with RoHS 2 Directive 2011/65/EU of the European Parliament and RoHS 3 Directive 2015/863/EU of the Council of 4 June 2015 on the restriction of the use of certain hazardous substances in electrical and electronic equipment.

Substance	Maximum limit (ppm)
Lead (Pb)	1000
Cadmium (Cd)	100
Mercury (Hg)	1000
Hexavalent Chromium (Cr6+)	1000
Poly Brominated Biphenyls (PBB)	1000
Poly Brominated Diphenyl ethers (PBDE)	1000
Bis(2-Ethylhexyl) phthalate (DEHP)	1000
Benzyl butyl phthalate (BBP)	1000
Dibutyl phthalate (DBP)	1000
Diisobutyl phthalate (DIBP)	1000

Exemptions: No exemptions are claimed.

Arduino Boards are fully compliant with the related requirements of European Union Regulation (EC) 1907 /2006 concerning the Registration, Evaluation, Authorization and Restriction of Chemicals (REACH). We declare none of the SVHCs (https://echa.europa.eu/web/guest/candidate-list-table), the Candidate List of Substances of Very High Concern for authorization currently released by ECHA, is present in all products (and also package) in quantities totaling in a concentration equal or above 0.1%. To the best of our knowledge, we also declare that our products do not contain any of the substances listed on the "Authorization List" (Annex XIV of the REACH regulations) and Substances of Very High Concern (SVHC) in any significant amounts as specified by the Annex XVII of Candidate list published by ECHA (European Chemical Agency) 1907 /2006/EC.

13 Conflict Minerals Declaration

As a global supplier of electronic and electrical components, Arduino is aware of our obligations with regard to laws and regulations regarding Conflict Minerals, specifically the Dodd-Frank Wall Street Reform and Consumer Protection Act, Section 1502. Arduino does not directly source or process conflict minerals such as Tin, Tantalum, Tungsten, or Gold. Conflict minerals are contained in our products in the form of solder or as a component in metal alloys. As part of our reasonable due diligence, Arduino has contacted component suppliers within our supply chain to verify their continued compliance with the regulations. Based on the information received thus far we declare that our products contain Conflict Minerals sourced from conflict-free areas.

14 FCC Caution

Any Changes or modifications not expressly approved by the party responsible for compliance could void the user's authority to operate the equipment.

This device complies with part 15 of the FCC Rules. Operation is subject to the following two conditions:

1. This device may not cause harmful interference.
2. This device must accept any interference received, including interference that may cause undesired operation.

FCC RF Radiation Exposure Statement:

1. This Transmitter must not be co-located or operating in conjunction with any other antenna or transmitter.
2. This equipment complies with RF radiation exposure limits set forth for an uncontrolled environment.
3. This equipment should be installed and operated with a minimum distance of 20 cm between the radiator & your body.

Note: This equipment has been tested and found to comply with the limits for a Class B digital device, pursuant to part 15 of the FCC Rules. These limits are designed to provide reasonable protection against harmful interference in a residential installation. This equipment generates, uses and can radiate radio frequency energy and, if not installed and used in accordance with the instructions, may cause harmful interference to radio communications. However, there is no guarantee that interference will not occur in a particular installation. If this equipment does cause harmful interference to radio or television reception, which can be determined by turning the equipment off and on, the user is encouraged to try to correct the interference by one or more of the following measures:

- Reorient or relocate the receiving antenna.
- Increase the separation between the equipment and receiver.
- Connect the equipment into an outlet on a circuit different from that to which the receiver is connected.
- Consult the dealer or an experienced radio/TV technician for help.

English: User manuals for license-exempt radio apparatus shall contain the following or equivalent notice in a conspicuous location in the user manual or alternatively on the device or both. This device complies with Industry Canada license-exempt RSS standard(s). Operation is subject to the following two conditions:

1. this device may not cause interference.

2. this device must accept any interference, including interference that may cause undesired operation of the device.

French: Le présent appareil est conforme aux CNR d'Industrie Canada applicables aux appareils radio exempts de licence. L'exploitation est autorisée aux deux conditions suivantes:

1. l'appareil nedoit pas produire de brouillage.
2. l'utilisateur de l'appareil doit accepter tout brouillage radioélectrique subi, même si le brouillage est susceptible d'en compromettre le fonctionnement.

IC SAR Warning:

English: This equipment should be installed and operated with a minimum distance of 20 cm between the radiator and your body.

French: Lors de l'installation et de l'exploitation de ce dispositif, la distance entre le radiateur et le corps est d'au moins 20 cm.

Important: The operating temperature of the EUT can't exceed 85 °C and shouldn't be lower than -40 °C.

Hereby, Arduino S.r.l. declares that this product is in compliance with essential requirements and other relevant provisions of Directive 2014/53/EU. This product is allowed to be used in all EU member states.

Company Information

Company name	Arduino SRL
Company Address	Via Andrea Appiani, 25 - 20900 MONZA（Italy)

Reference Documentation

Ref	Link
Arduino IDE (Desktop)	https://www.arduino.cc/en/Main/Software
Arduino Courses	https://www.arduino.cc/education/courses
Arduino Documentation	https://docs.arduino.cc/
Arduino Cloud Editor	https://app.arduino.cc/sketches
Cloud IDE Getting Started	https://docs.arduino.cc/arduino-cloud/guides/editor/
Project Hub	https://projecthub.arduino.cc/
Library Reference	https://docs.arduino.cc/libraries/
Online Store	https://store.arduino.cc/

Revision History

Date	Revision	Changes
11/07/2024	1	First release
05/09/2024	2	Cloud Editor updated from Web Editor
06/12/2024	3	Updated I2C information
04/02/2025	4	Add Certification Link
20/10/2026	5	Added note for Intended Use