User Manual
SKU: ABX00114

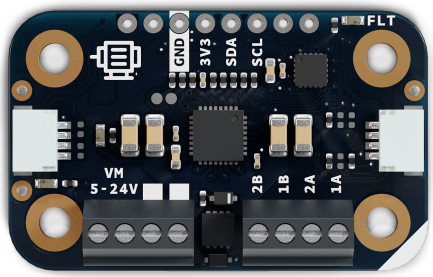

Description

The Modulino Motors, powered by an on-board STM32C011F6 microcontroller and featuring the MAX22211 dual H-bridge driver, delivers precise motor control for up to two brushed DC motors, two solenoids, two latched valves, or one stepper motor. Designed for high-current applications, it handles motor voltages from 5 V to 24 V while maintaining safe operation with reverse polarity protection and transient voltage suppression.

Target Areas

Maker, beginner, education, robotics

Contents

1 Application Examples **3**

2 Features **4**

2.1 Contents 4

3 Related Products **4**

4 Rating **4**

4.1 Recommended Operating Conditions 4

5 Power Tree **5**

6 Block Diagram **5**

7 Functional Overview **6**

7.1 Technical Specifications (Module-Specific) 6

7.2 Pinout 7

7.3 Power Specifications 9

7.4 Mechanical Information 9

7.5 I2C Address Reference 10

8 Device Operation **11**

8.1 Motor Connection Examples 11

1 Application Examples

- **Mobile Robotics** Drive two independent brushed DC motors for differential steering in mobile robots and vehicles.
- **Automation & Control** Actuate solenoids, valves, or small industrial actuators with precise timing and current control.
- **Stepper Motor Projects** Control a single bipolar stepper motor for CNC machines, 3D printers, or precise positioning systems.

2 Features

- **MAX22211** dual H-bridge driver supporting up to **3.8 A** per channel.
- Separate **motor supply input** (VM) ranging from **5 V to 24 V**.
- **STM32C011F6** microcontroller providing I2C interface and motor control logic.
- **Reverse polarity protection** via PMOS and **transient overvoltage protection** with 24 V TVS.
- **Fault detection** with dedicated indicator LED and open-drain fault pin.
- **Two 1×4 screw terminal blocks** for motor connections and power input.

2.1 Contents

SKU	Name	Purpose	Quantity
ABX00114	Modulino Motors	Dual H-bridge motor driver with I2C control	1
	I2C Qwiic cable	Compatible with the Qwiic standard	1

3 Related Products

- **SKU: ABX00087** – Arduino® UNO R4 WiFi
- **SKU: ABX00162** – Arduino® UNO Q
- **SKU: ABX00142/ABX00143** – Arduino® Nano R4
- **SKU: ASX00061** – Nano Connector Carrier
- **SKU: AKX00069** – Plug and Make Kit

4 Rating

4.1 Recommended Operating Conditions

- **Microcontroller supply range:** 2.0 V – 3.6 V (STM32C011F6)
- **Motor supply voltage (VM):** 5 V – 24 V
- **Powered at 3.3 V** through the Qwiic interface (in accordance with the Qwiic standard)
- **Operating temperature:** –40 °C to +85 °C
- **Maximum output current:** 3.8 A per channel

Typical current consumption:

- Microcontroller: ~3.4 mA idle
- Motor driver: Depends on connected motors (up to 3.8 A per channel)
- Power LED: ~1 mA
- Fault LED: ~2 mA (when active)

5 Power Tree

The power tree for the Modulino node can be consulted below:

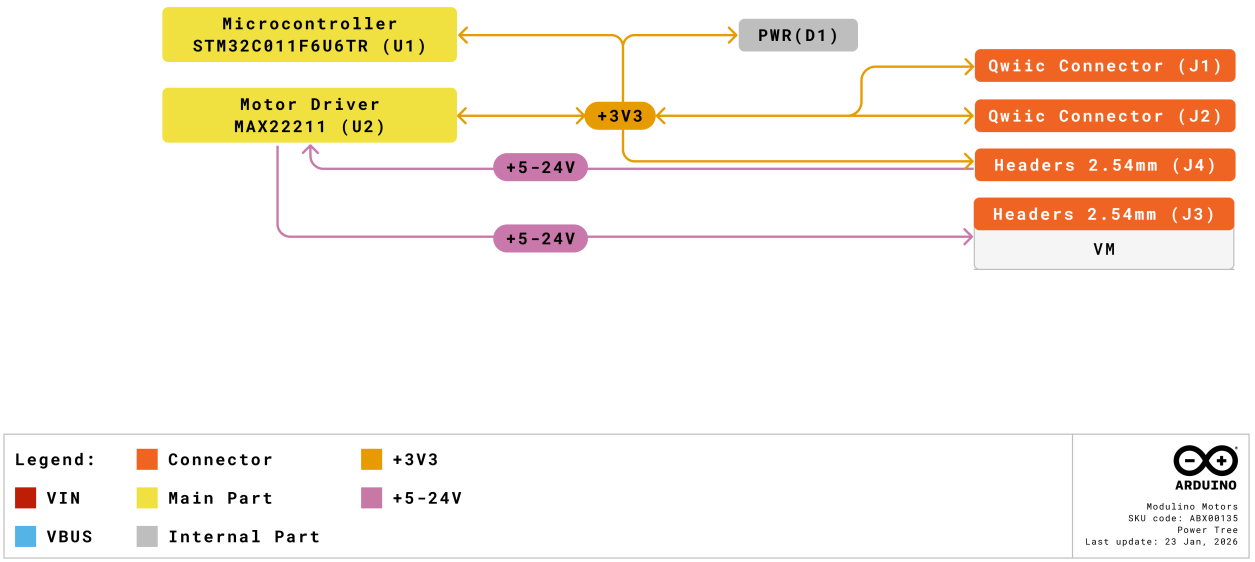

Modulino Motors Power Tree

6 Block Diagram

This module includes an STM32C011F6 microcontroller that controls the MAX22211 dual H-bridge driver. It communicates via I2C by default.

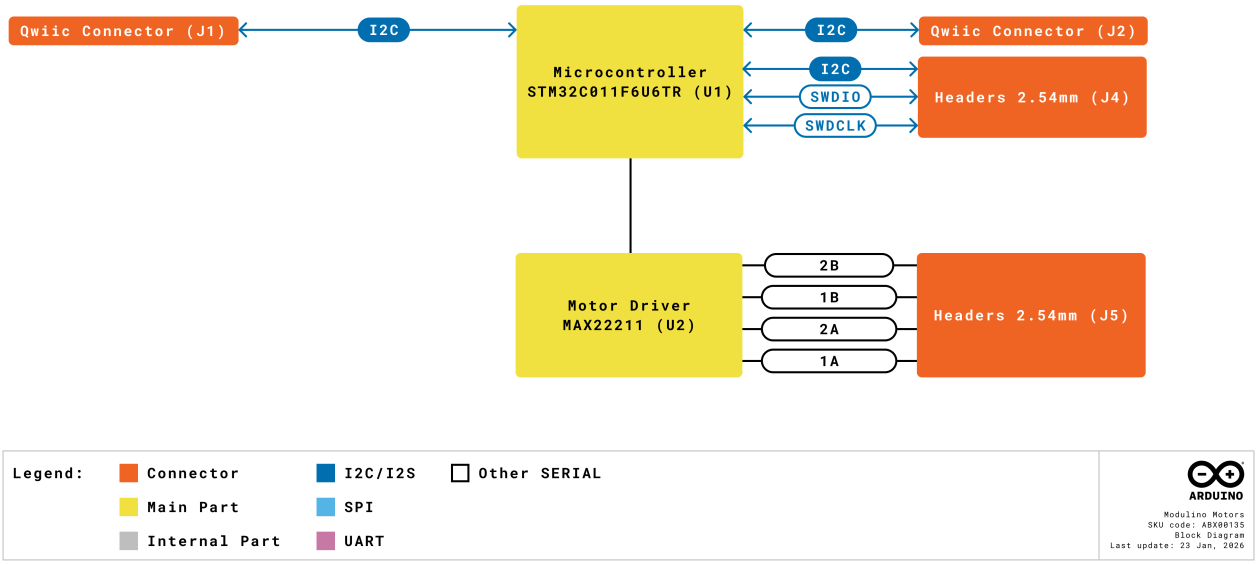

Modulino Motors block diagram

7 Functional Overview

The Modulino Motors node provides a complete motor control solution with integrated protection features. The STM32C011F6 microcontroller receives commands via I2C and translates them into control signals for the MAX22211 H-bridge driver. The driver can operate in multiple modes including PWM speed control, brake, coast, and decay modes for optimal motor performance. The separate VM input allows motor voltages up to 24 V while the control logic operates safely at 3.3 V. Built-in reverse polarity protection and a 24 V TVS diode protect against common wiring errors and voltage transients.

7.1 Technical Specifications (Module-Specific)

Specification	Details
Microcontroller	STM32C011F6
Motor Driver	MAX22211 (dual H-bridge)
Supply Voltage	Logic: 3.3 V, Motor (VM): 5 V – 24 V
Maximum Current	3.8 A per channel
Power Consumption	Variable, depends on motor load
Protection	Reverse polarity, overvoltage transient (24 V TVS)
Communication	I2C (Qwiic)
Indicators	Yellow power LED (VM), Red fault LED

7.2 Pinout

Qwiic / I2C (1×4 Header)

Pin	Function
GND	Ground
3.3 V	Power Supply (3.3 V)
SDA	I2C Data
SCL	I2C Clock

These pads and the Qwiic connectors share the same I2C bus at 3.3 V.

Left Screw Terminal (1×4, 2.54 mm pitch, black)

Pin	Function
VM	Motor power input (5–24 V)
VM	Motor power input (5–24 V)
GND	Ground
GND	Ground

Right Screw Terminal (1×4, 2.54 mm pitch, black)

Pin	Function
1A	Motor A output 1
2A	Motor A output 2
1B	Motor B output 1
2B	Motor B output 2

Additional 1×8 Header

Pin	Function
RESET	Reset (PF2)
SWCLK	SWD Clock
SWDIO	SWD Data
SDA	I2C Data
SCL	I2C Clock
VM	Motor voltage
3V3	3.3 V Power
GND	Ground

Note:

- VM input includes reverse polarity protection and 24 V TVS for transient suppression.
- Do not exceed 24 V on VM input to avoid damage to protection circuitry.

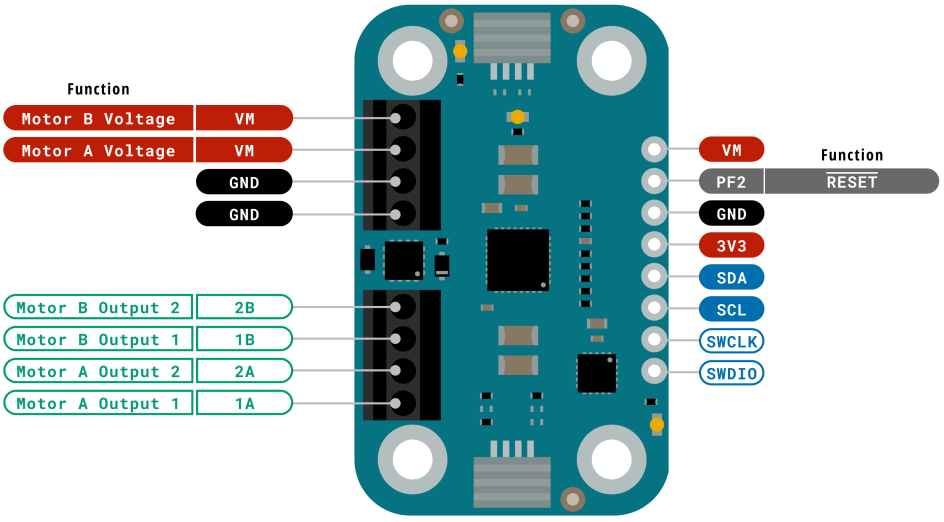

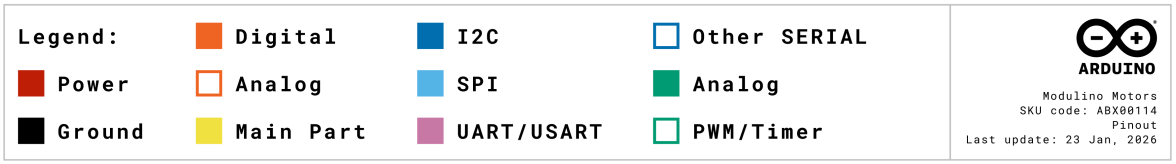

Pinout Overview

7.3 Power Specifications

- **Nominal operating voltage:** 3.3 V logic, 24 V motor (VM)
- **Motor voltage range:** 5 V–24 V
- **Microcontroller voltage range:** 2.0 V–3.6 V

7.4 Mechanical Information

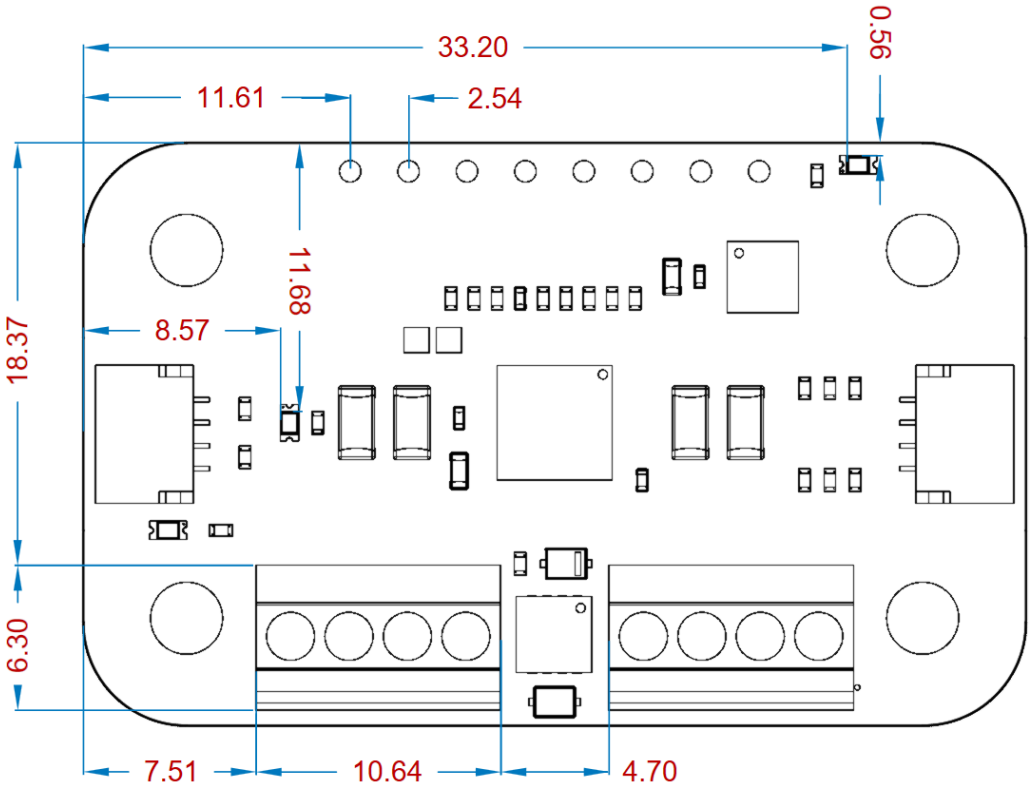

Modulino Motors Mechanical Information

- Board dimensions: 41 mm × 25.36 mm
- Thickness: 1.6 mm (±0.2 mm)
- Four mounting holes (Ø 3.2 mm)
  - Hole spacing: 16 mm vertically, 32 mm horizontally

7.5 I2C Address Reference

Board Silk Name	Motor Driver	Modulino I2C Address (HEX)	Editable Addresses (HEX)	Hardware I2C Address (HEX)
MODULINO MOTORS	MAX22211	0x6A	Any custom address (via software config.)	0x35

Note:

- Default I2C address is **0x6A**.
- A white rectangle on the bottom silk allows users to write a new address after reconfiguration.

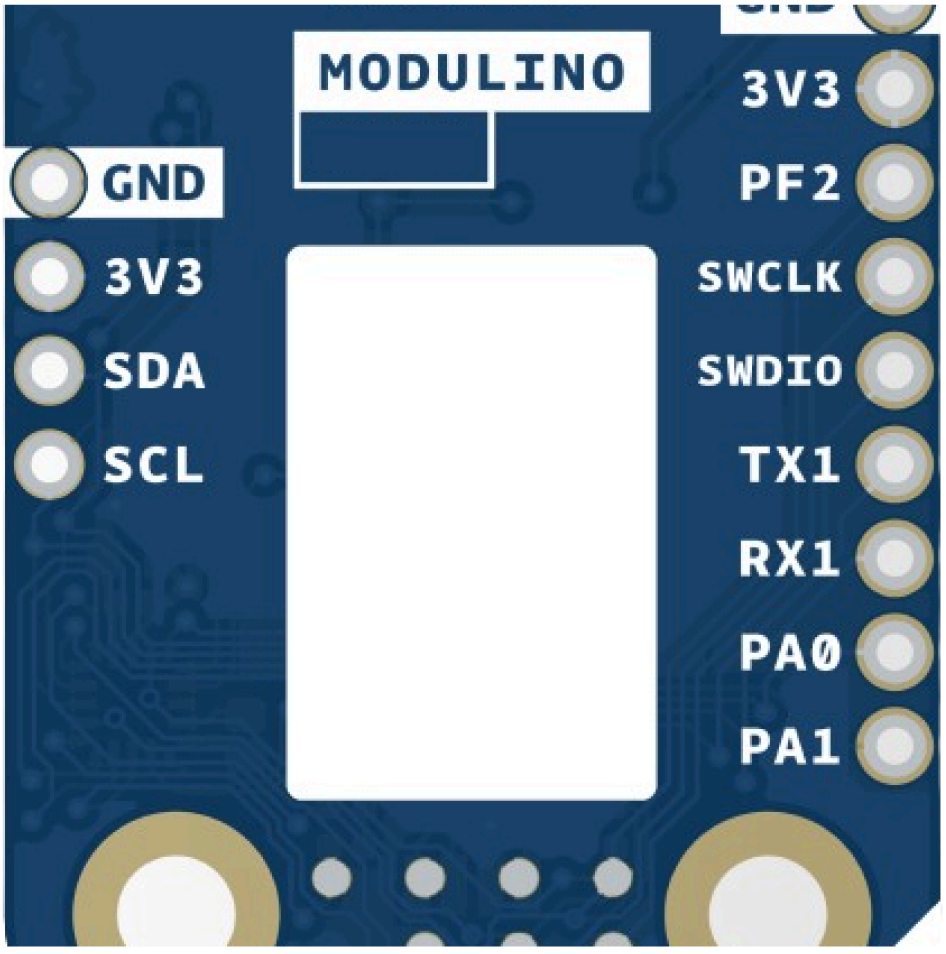

Blank silk for identification

8 Device Operation

By default, the board operates as an I2C target device. It manages motor direction, speed (via PWM), and braking through integrated firmware. Connect motors to the right screw terminal and supply appropriate voltage to VM on the left terminal. The fault LED illuminates when overcurrent, overtemperature, or other fault conditions are detected by the MAX22211.

8.1 Motor Connection Examples

- **Two DC motors:** Connect motor A to 1A/2A and motor B to 1B/2B
- **One stepper motor:** Connect coil A to 1A/2A and coil B to 1B/2B
- **Solenoids/valves:** Connect each device across respective output pairs

Company Information

Company name	Arduino SRL
Company Address	Via Andrea Appiani, 25 - 20900 MONZA（Italy)

Reference Documentation

Ref	Link
Arduino IDE (Desktop)	https://www.arduino.cc/en/Main/Software
Arduino Courses	https://www.arduino.cc/education/courses
Arduino Documentation	https://docs.arduino.cc/
Arduino IDE (Cloud)	https://create.arduino.cc/editor
Cloud IDE Getting Started	https://docs.arduino.cc/cloud/web-editor/tutorials/getting-started/getting-started-web-editor
Project Hub	https://projecthub.arduino.cc/
Library Reference	https://github.com/arduino-libraries/
Online Store	https://store.arduino.cc/

Revision History

Date	Revision	Changes
23/03/2026	1	First release