THIS DRAWING IS UNPUBLISHED. RELEASED FOR PUBLICATION 2016
© COPYRIGHT 2016 BY TE CONNECTIVITY ALL RIGHTS RESERVED.

LOC	DIST

REVISIONS

P	LTR	DESCRIPTION	DATE	DWN	APVD
	D	REVISED PER PCN-23-192205	05FEB2024	RK	CB
	D1	REVISED PER PCN-24-210159	21MAY2024	PS	CB
	D2	REVISED PER PCN-24-220917	17SEP2024	PS	CB
	D3	REVISED PER PCN-25-254987	08SEP2025	AP	AJ

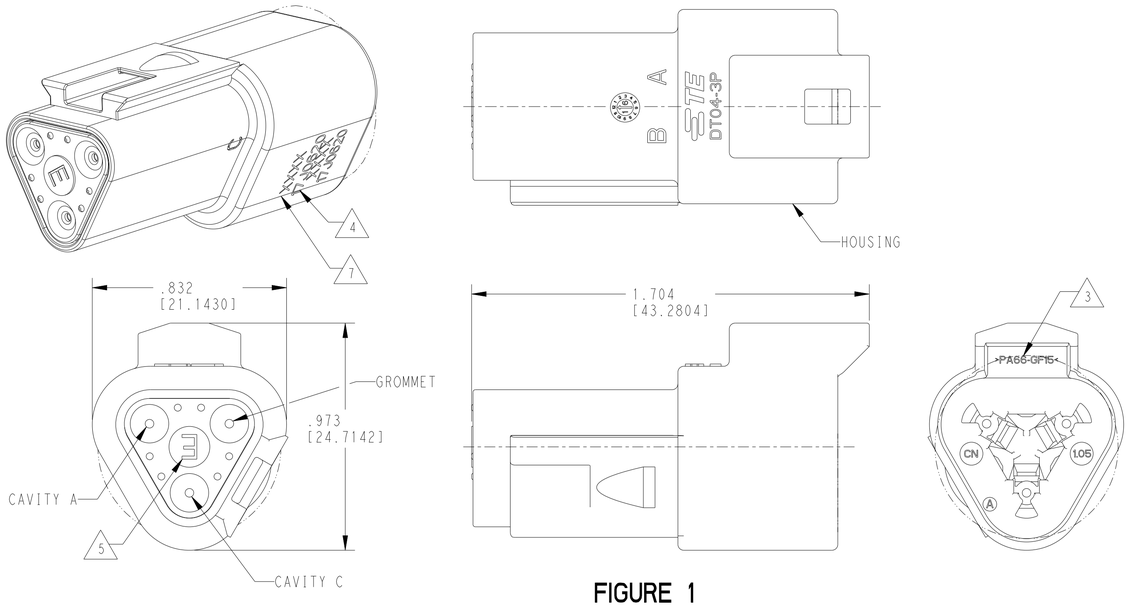

FIGURE 1

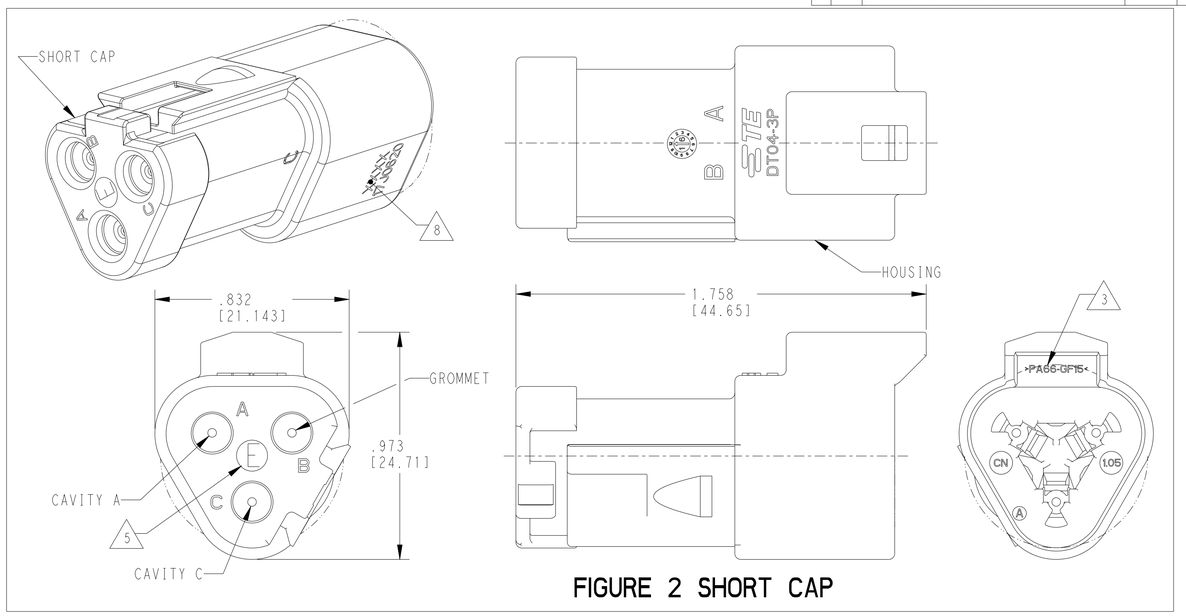

FIGURE 2 SHORT CAP

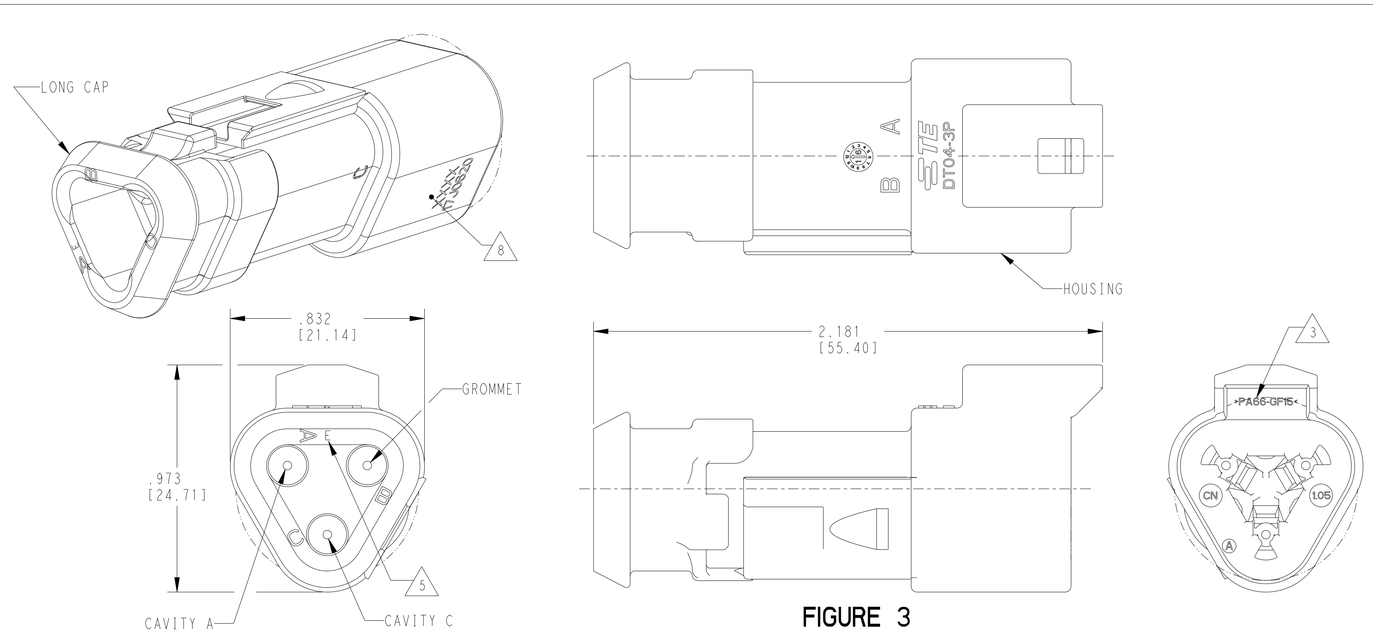

FIGURE 3
LONG CAP

CONTACT SIZE	WIRE RANGE	INSULATION OD SEALING RANGE	SEAL IDENTIFICATION
16	14-20 AWG [2.5-0.5mm²]	.088-.145 [2.23-3.68]	STANDARD SEAL
		.053-.120 [1.35-3.05]	EXTRA THIN SEAL E-SEAL

TE INTERNAL PART NUMBER	DEUTSCH PART NUMBER	PN REV	HOUSING COLOR	STANDARD SEAL GROMMET	EXTRA THIN SEAL E-SEAL GROMMET	BLOCKED SEAL	SHORT CAP	LONG CAP	FIGURE
DT04-3P	DT04-3P	A	GREY	X					1
DT04-3P-C015	DT04-3P-C015	B	GREY		X				1
DT04-3P-C017	DT04-3P-C017	B	GREY			X	X		2
DT04-3P-CE01	DT04-3P-CE01	C	GREY		X		X		2
DT04-3P-CE04	DT04-3P-CE04	C	GREY		X			X	3
DT04-3P-E003	DT04-3P-E003	B	GREY	X			X		2
DT04-3P-E008	DT04-3P-E008	B	GREY	X				X	3
DT04-3P-EP04	DT04-3P-EP04	C	GREY	X			X		2
DT04-3P-P004	DT04-3P-P004	B	GREY	X					1
DT04-3P-CE02	DT04-3P-CE02	B	BLACK		X				1
DT04-3P-CE03	DT04-3P-CE03	B	BLACK		X		X		2
DT04-3P-CE09	DT04-3P-CE09	B	BLACK		X			X	3
DT04-3P-E004	DT04-3P-E004	A	BLACK	X					1
DT04-3P-E005	DT04-3P-E005	A	BLACK	X			X		2
DT04-3P-EE01	DT04-3P-EE01	A	BLACK	X				X	3
1-2448110-1	DT04-3P-TE09	A	BROWN		X				1
1-2448110-2	DT04-3P-TE03	A	GREEN		X				1
1-2448110-3	DT04-3P-TE07	A	BLUE		X				1
2-2448110-1	DT04-3P-TN09	A	BROWN	X					1
2-2448110-2	DT04-3P-TN03	A	GREEN	X					1
2-2448110-3	DT04-3P-TN07	A	BLUE	X					1
3-2448110-1	DT04-3P-EE18	A	BROWN		X		X		2
3-2448110-2	DT04-3P-EE16	A	GREEN		X		X		2
3-2448110-3	DT04-3P-EE17	A	BLUE		X		X		2
4-2448110-1	DT04-3P-EE14	A	BROWN	X			X		2
4-2448110-2	DT04-3P-EE13	A	GREEN	X			X		2
4-2448110-3	DT04-3P-EE06	A	BLUE	X			X		2

3 MATERIAL: HOUSING: PA66 GF15, SEE TABLE FOR COLOR
SHORT, LONG CAP: PA66 GF15, BLACK
GROMMET: VMQ N-SEAL: RED-ORANGE
E-SEAL: BURNT RED
BLOCKED: RED-ORANGE

2. THIS RECEPTACLE MATES WITH DT06-3S-XXXX PLUG. (XXXX = ALL MODIFICATIONS)

1. SECONDARY WEDGE LOCK SOLD SEPARATELY: W3P-XXXX. (XXXX = ALL MODIFICATIONS)

NOTES: UNLESS OTHERWISE SPECIFIED

7 XXXX IDENTIFIES THE MODIFICATION NUMBER, IF APPLICABLE. EXAMPLE: "E003" FOR DT04-3P-E003, OR BLANK FOR DT04-3P.

6. FOR CONTACTS AND WIRE PERFORMANCE AND APPLICATION CHARACTERISTICS SEE CUSTOMER DRAWING 0425-015-0000.

5 "E" IDENTIFIES E-SEAL.

4 DATE CODE: IDENTIFIES THE YEAR, MONTH, DAY AND HOUR OF ASSEMBLY.
YEAR: FIRST AND SECOND DIGITS. (17 = 2017)
MONTH: THIRD DIGIT, EXCLUDING I. A = JAN, B = FEB, C = MARCH ... (K = OCTOBER)
DAY: FOURTH AND FIFTH DIGITS (14 = 14th DAY)
HOUR: SIXTH AND SEVENTH DIGITS (11 = 11AM)

9. FOR ALL ID MARKINGS SURROUNDING THE PART, ORIENTATION IS SHOWN FOR REFERNCE ONLY AND DOES AFFECT FUNCTIONALITY. PROVIDED THE MARKINGS ARE IN THE CORRECT POSITION. SIZE AND LOCATION ARE APPORXIMATE AS SHOWN.

8 ADDITIONAL MARKING PER NOTE 4 AND 7 EXCLUSIVELY FOR PARTS WITH CAPS PRODUCED IN CHINA.

THIS DRAWING IS A CONTROLLED DOCUMENT.

DIMENSIONS: in [mm]

TOLERANCES UNLESS OTHERWISE SPECIFIED:
0 PLC ±
1 PLC ±
2 PLC ±
3 PLC ±.025 [0.64]
4 PLC ±
ANGLES ±0°30'0"

MATERIAL 3
FINISH

DWN JAIME C. APOSTOL 12JUL2016
CHK D. MEYER 12JUL2016
APVD D. MEYER 12JUL2016
PRODUCT SPEC 108-151009
APPLICATION SPEC 114-151009
WEIGHT

TE Connectivity

NAME 3 WAY RECEPTACLE, STANDARD SEAL EXTRA THIN SEAL, SHORT CAP AND LONG CAP, DT SERIES

SIZE	CAGE CODE	DRAWING NO	RESTRICTED TO
A1	4AFU8	C-DT04-3P-XXXX	-

CUSTOMER DRAWING SCALE 3:1 SHEET 1 OF 1 REV D3

4805 (3/11)