© 2023 TE Connectivity. All Rights Reserved.

REVISIONS					
P	LTR	DESCRIPTION	DATE	DWN	APVD
	A	INITIAL RELEASE	07MAR2024	J.G	Z.Z
	A1	ECN-24-274573	12JUL2024	J.G	Z.Z

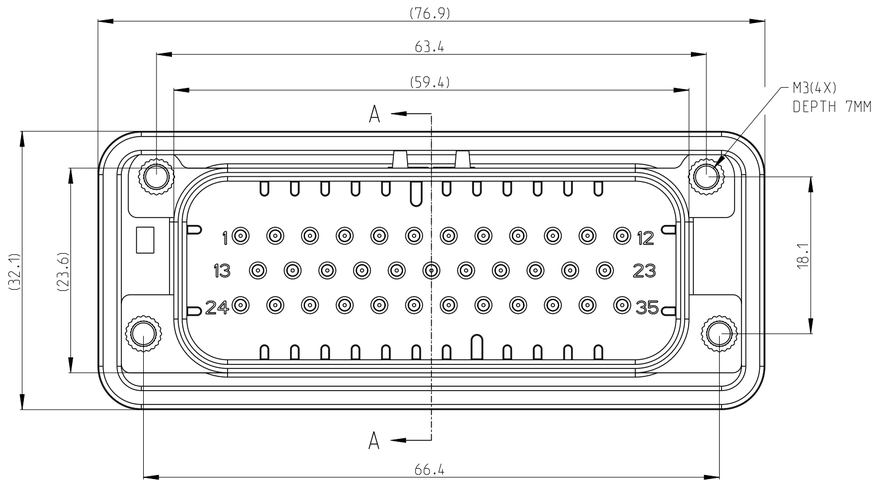

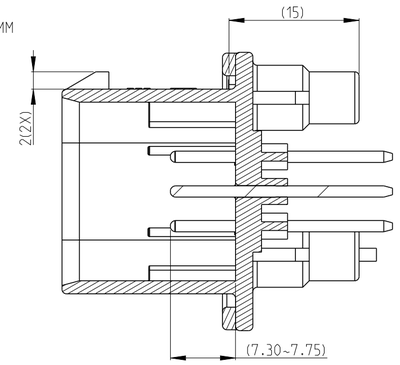

SECTION A-A

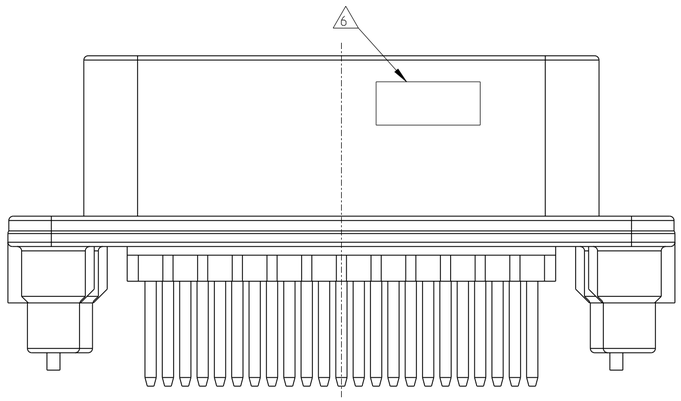

RECOMMENDED PANEL LAYOUT

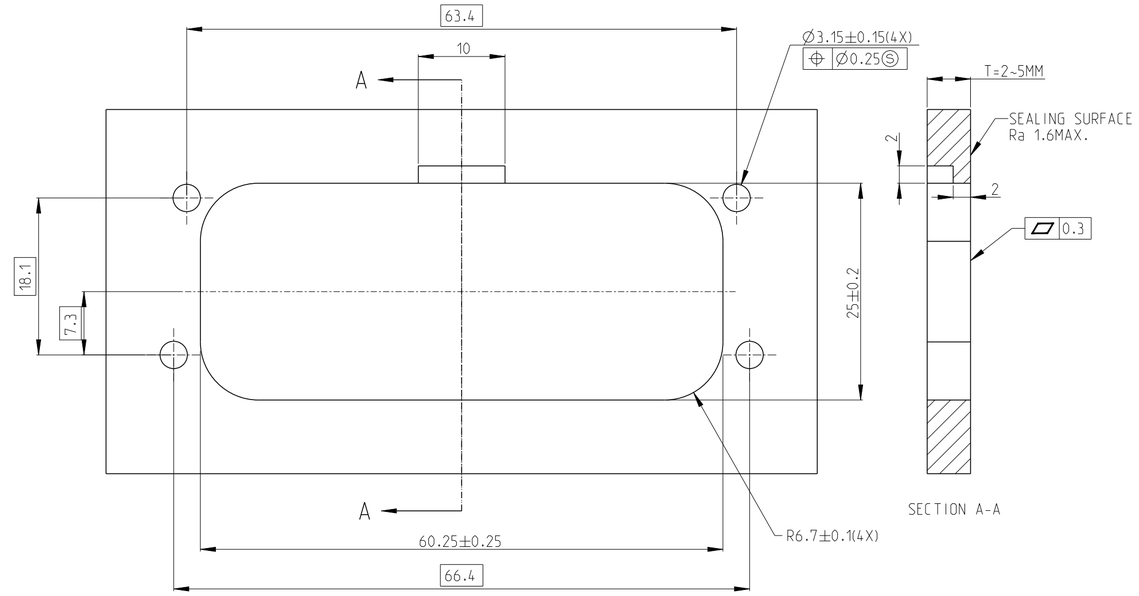

SECTION A-A

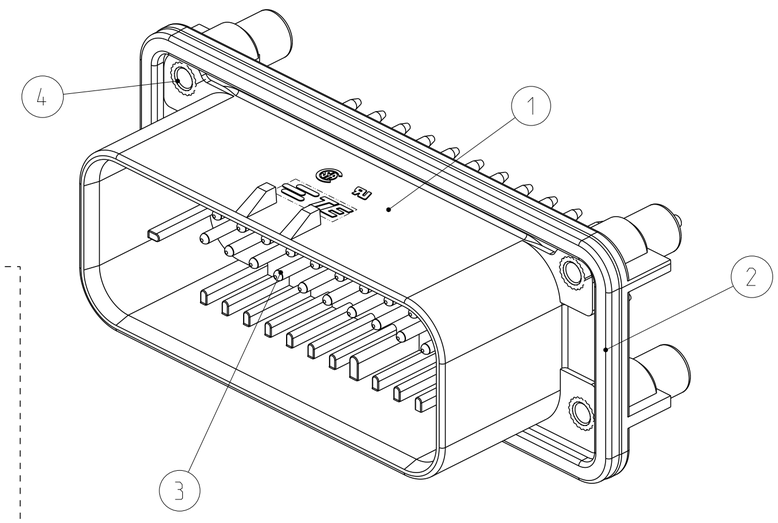

1. MATERIAL: SEE BELOW TABLE
2. RECOMMEND MOUNTING SCREW: M3XL(L=5+T).
   T=THICKNESS OF PANEL
3. SCREW TORQUE: 0.5~0.6Nm
4. NO DEFINED DIMENSIONS ACCORDING TO 3D MODEL
5. MATED WITH TE PLUG: 776164-1
6. D/C IN THIS LOCATION USING 5 DIGIT CODE
   FIRST 2 DIGITS = YEAR
   SECOND 2 DIGITS = WEEK
   LAST DIGIT = DAY
7. RECOMMENDED WAVE SOLDER PROCESS: 260°C(MAX.) FOR 3~5S MAX.

RECOMMENDED PCB LAYOUT

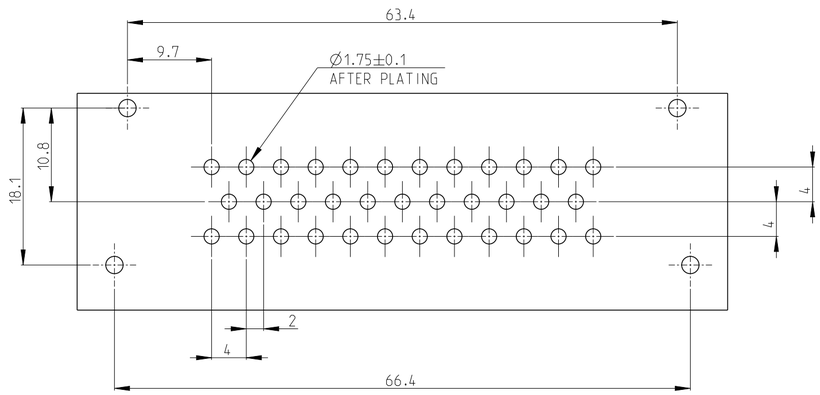

PCB THICKNESS IS 1.57MM

ITEM	DESCRIPTION	MATERIAL	FINISH/COLOR	2474615-1
4	BUSHING(M3)	STEEL	Zn-Ni PLATED	4
3	PIN	BRASS	TIN PLATED	35
2	GASKET	SILICONE	NA	1
1	35P HOUSING	PBT GF30	BLACK	1

THIS DRAWING IS A CONTROLLED DOCUMENT.

DIMENSIONS: mm

TOLERANCES UNLESS OTHERWISE SPECIFIED:
0 PLC ±
1 PLC ±0.1
2 PLC ±0.01
3 PLC ±0.001
4 PLC ±0.0001
ANGLES ±

MATERIAL -
FINISH -

DWN	J.GU	07MAR2024
CHK	C.WAN	07MAR2024
APVD	Z.ZHOU	07MAR2024
PRODUCT SPEC	-	
APPLICATION SPEC	-	
WEIGHT	-	

TE Connectivity

NAME: AMPSEAL 35P WITH M3 BUSHING

-

SIZE	CAGE CODE	DRAWING NO	RESTRICTED TO
A2	00779	C-2474615	-

CUSTOMER DRAWING | SCALE 2:1 | SHEET 1 OF 1 | REV A1

1471-9 (3/13)