REVISIONS			
REV	DESCRIPTION	DATE	APPROVED
A1	REVISED PER ECO-11-005294	13APR11	HMR

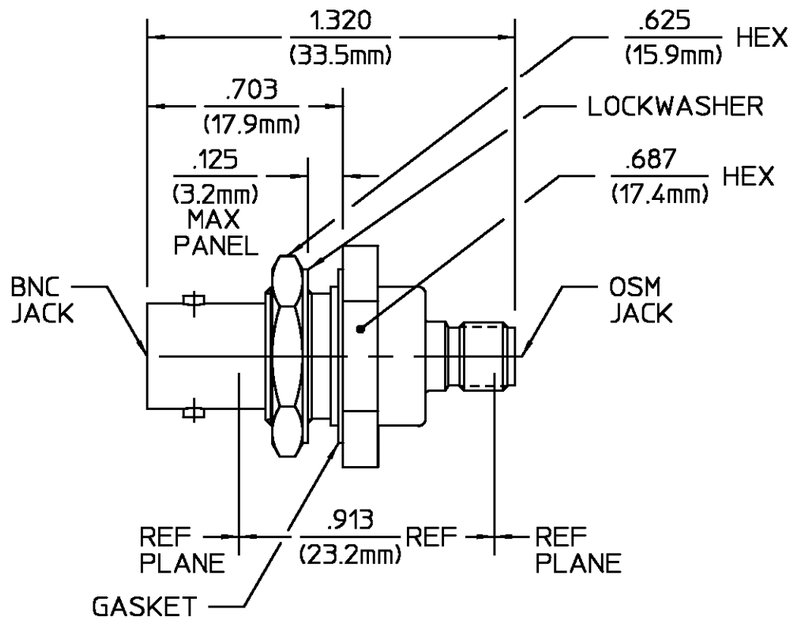

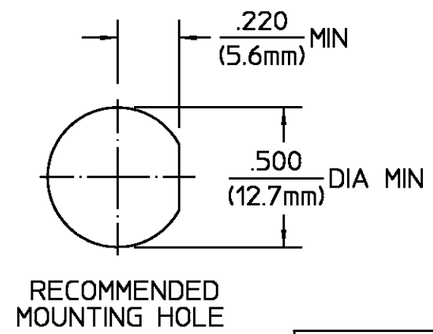

ELECTRICAL	
Nominal Impedance (Ohms)	50
Frequency Range (GHz) DC to	4
Volt Rating (VRMS MAX)	
@ Sea Level	335
VSWR	1.30 Max at 0.5 to 4.0 GHz
Insertion Loss (dB MAX)	$0.2\sqrt{f(GHz)}$
RF Leakage (dB MIN)	-55, 2 to 3 GHz
Corona, 70,000 Ft (VRMS MIN)	250
Dielectric Withstanding Voltage	
(VRMS MIN) @ Sea Level	1500
Contact Resistance (Milliohms MAX)	
Center Contact	4.1
Outer Contact	2.2
RF High Potential @ Sea Level	
(VRMS MIN @ 5 MHz)	670
I.R.(Megohms MIN)	5000

MECHANICAL		
Interface Dimensions		
BNC	MIL-STD-348A Fig. 301.2	
OSM	MIL-STD-348A Fig. 310.2	
Recommended Mating Torque		
4-6 In-Lbs		
Mating Characteristics:		
	BNC	OSM
Insertion (Lbs Max)	2.0	3.0
Withdrawal (Oz Min)	2.0	1.0
Force to Engage/Disengage		
Longitudinal		
Force (Lb Max)	3.0	N/A
Torque (In-Lb Max)	2.5	2.0
Contact Retention		
Axial (Lbs)	6.0	
Radial (In-Oz)	4.0	
Weight (Grams)		

ENVIRONMENTAL
Temperature Rating -65°C to +125°C
Vibration MIL-STD-202, Method 204, Condition D
Shock MIL-STD-202, Method 213, Condition I
Thermal Shock MIL-STD-202, Method 107, Condition C, Except High Temp
Moisture Resistance MIL-STD-202, Method 106 Shall Be Omitted
Corrosion - MIL-STD-202, Method 101, Condition B, 5% salt spray

COMPONENT	MATERIAL	FINISH
HOUSING MOUNTING NUT	BRASS PER QQ-B-626 COMP. 360, HALF HARD	NICKEL PLATE PER QQ-N-290 OVER COPPER PLATE PER MIL-C-14550
HOUSING	STAINLESS STEEL PER ASTM-A484 AND ASTM-A582, TYPE 303	PASSIVATE PER ASTM-A380
DIELECTRIC	TFE FLUOROCARBON PER ASTM-D-1457	N/A
CENTER CONTACT	BERYLLIUM COPPER PER ASTM B 196, ALLOY C17300, CONDITION H	GOLD PLATE PER MIL-G-45204 OVER COPPER PLATE PER MIL-C-14550
LOCKWASHER	PHOSPHOR BRONZE PER QQ-B-750, GRADE B2	NICKEL PLATE PER QQ-N-290 OVER COPPER PLATE PER MIL-C-14550
GASKET	SILICONE RUBBER PER ZZ-R-765	N/A

UNLESS OTHERWISE SPECIFIED DIMENSIONS ARE IN INCHES
TOLERANCE ON

FRAC.	DEC.	ANGLES
± 1/64	±.005	± 1°

		DATE
DRAWN BY	AUGUST TARDIFF	5/18/90
CHECKED BY	S. ALLERDICE	6/6/90
APP'D BY	B. CLEVELAND	8/3/90

USE ASS'Y PROCEDURE

NO. A.P. N/A

TE Connectivity

TITLE BNC JACK TO OSM JACK BULKHEAD FEEDTHROUGH ADAPTER

SIZE	CODE IDENT NO.		REV
B	26805	1058117-1	A1
SCALE 2:1			SHEET 1 OF 1