© – TE Connectivity. All Rights Reserved.

REVISIONS					
P	LTR	DESCRIPTION	DATE	DWN	APVD
	V2	ECR-25-239014	17NOV2025	SA	PS

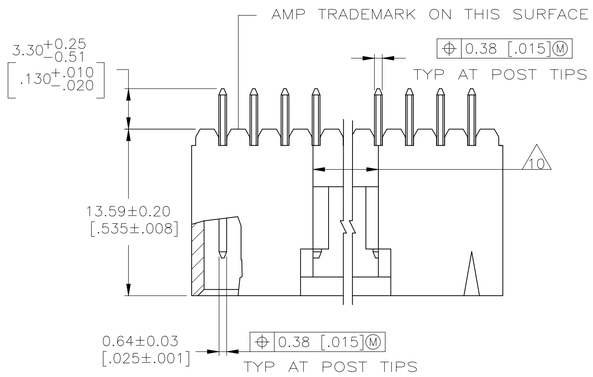

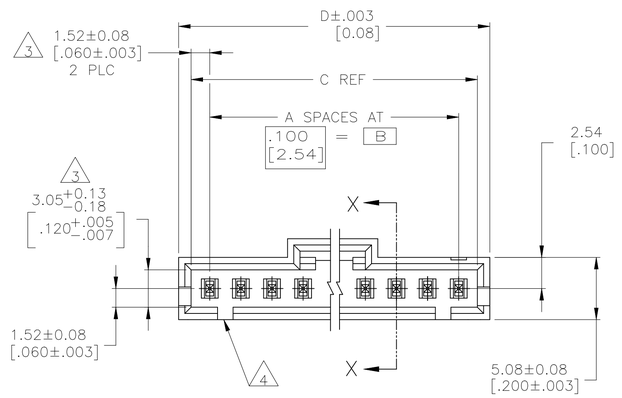

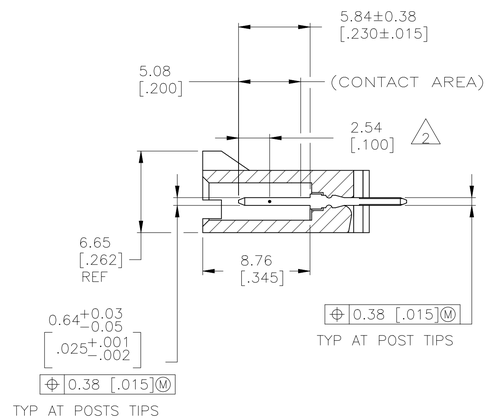

SECTION X–X

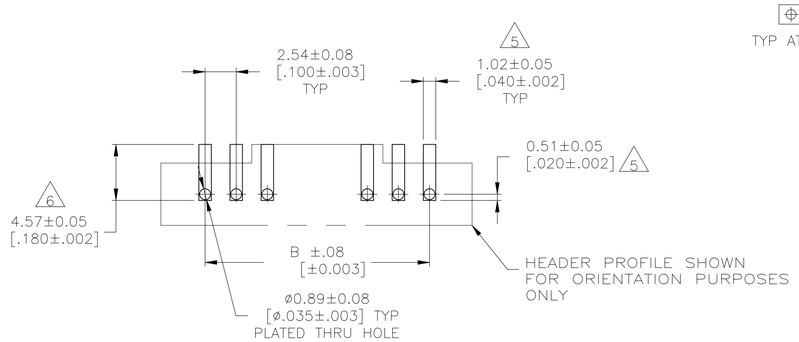

RECOMMENDED PC BOARD MOUNTING DIMENSIONS
RECOMMENDED STENCIL THICKNESS = 0.25 [.010]

1. .000015[0.000381]GOLD IN THE CONTACT AREA, .000100–.000200[0.00254–0.00508] MATTE TIN–LEAD ON THE SOLDER TAIL, ALL OVER .000050[0.00127] NICKEL.
2. POINT OF MEASUREMENT FOR PLATING THICKNESS
3. THE NOTED DIMENSIONS APPLY FROM THE BASIC DIMENSION LINE (NOT THE POST CENTERLINE) TO THE SURFACE INDICATED.
4. ONE POLARIZATION SLOT FOR 2 AND 3 POSITION ASSEMBLIES ONLY.
5. DIMENSIONS NOTED ARE FOR SOLDER STENCIL LAYOUT FOR USE WITH .062±.008 THICK PRINTED CIRCUIT BOARDS
6. PARTS ARE PACKAGED IN GANG OF TUBES
7. OBSOLETE PART NO., REFER TO DWG 104910 FOR POS 13 THRU 25.
8. HOUSING: HIGH TEMPERATURE LCP, COLOR–BLACK.
   POSTS: BRASS.
9. .000015[0.000381]GOLD IN THE CONTACT AREA, .000100–.000200[0.00254–0.00508] MATTE TIN ON THE SOLDER TAIL, ALL OVER .000050[0.00127] NICKEL
10. 0.25 [.010] RECESS PERMISSIBLE IN THIS AREA FOR MOLD SHUT OFF

	PLATING	D	C	B	A	NO OF POSN	ASSEMBLY PART NUMBER
	9	1.295	1.220	1.100	11	12	6-104363-1
	9	1.195	1.120	1.000	10	11	6-104363-0
	9	1.095	1.020	.900	9	10	5-104363-9
	9	.995	.920	.800	8	9	5-104363-8
	9	.895	.820	.700	7	8	5-104363-7
	9	.795	.720	.600	6	7	5-104363-6
	9	.695	.620	.500	5	6	5-104363-5
	9	.595	.520	.400	4	5	5-104363-4
	9	.495	.420	.300	3	4	5-104363-3
	9	.395	.320	.200	2	3	5-104363-2
	9	.295	.220	.100	1	2	5-104363-1
OBSOLETE		2.595	2.520	2.400	24	25	7 2-104363-4
		2.495	2.420	2.300	23	24	7 2-104363-3
		2.395	2.320	2.200	22	23	7 2-104363-2
		2.295	2.220	2.100	21	22	7 2-104363-1
		2.195	2.120	2.000	20	21	7 2-104363-0
		2.095	2.020	1.900	19	20	7 1-104363-9
		1.995	1.920	1.800	18	19	7 1-104363-8
		1.895	1.820	1.700	17	18	7 1-104363-7
		1.795	1.720	1.600	16	17	7 1-104363-6
		1.695	1.620	1.500	15	16	7 1-104363-5
		1.595	1.520	1.400	14	15	7 1-104363-4
		1.495	1.420	1.300	13	14	7 1-104363-3
		1.395	1.320	1.200	12	13	7 1-104363-2
SUPERSEDED BY 6-104363-1	1	1.295	1.220	1.100	11	12	1-104363-1
SUPERSEDED BY 6-104363-0	1	1.195	1.120	1.000	10	11	1-104363-0
SUPERSEDED BY 5-104363-9	1	1.095	1.020	.900	9	10	104363-9
SUPERSEDED BY 5-104363-8	1	.995	.920	.800	8	9	104363-8
SUPERSEDED BY 5-104363-7	1	.895	.820	.700	7	8	104363-7
SUPERSEDED BY 5-104363-6	1	.795	.720	.600	6	7	104363-6
SUPERSEDED BY 5-104363-5	1	.695	.620	.500	5	6	104363-5
	1	.595	.520	.400	4	5	104363-4
SUPERSEDED BY 5-104363-3	1	.495	.420	.300	3	4	104363-3
SUPERSEDED BY 5-104363-2	1	.395	.320	.200	2	3	104363-2
SUPERSEDED BY 5-104363-1	1	.295	.220	.100	1	2	104363-1

THIS DRAWING IS A CONTROLLED DOCUMENT.

DIMENSIONS: mm [INCHES]

TOLERANCES UNLESS OTHERWISE SPECIFIED:
0 PLC ± –
1 PLC ± –
2 PLC ± –
3 PLC ± .005
4 PLC ± –
ANGLES ± –

MATERIAL 8

FINISH SEE TABLE

DWN G DOUTY 22FEB88
CHK T C CLARK 22FEB88
APVD –
PRODUCT SPEC –
APPLICATION SPEC –
WEIGHT –

TE Connectivity

NAME HEADER ASSY, AMPMODU MTE, VERTICAL, SINGLE ROW, .100 C/L, .025 SQ POSTS, POLARIZED WITH LATCHING

SIZE A1 | CAGE CODE – | DRAWING NO C-104363 | RESTRICTED TO –

CUSTOMER DRAWING | SCALE 4:1 | SHEET 1 OF 1 | REV V2

4805 (1/15)