© – TE Connectivity. All Rights Reserved.

REVISIONS					
P	LTR	DESCRIPTION	DATE	DWN	APVD
	N6	ECR-25-238910	04APR2025	ABS	PS

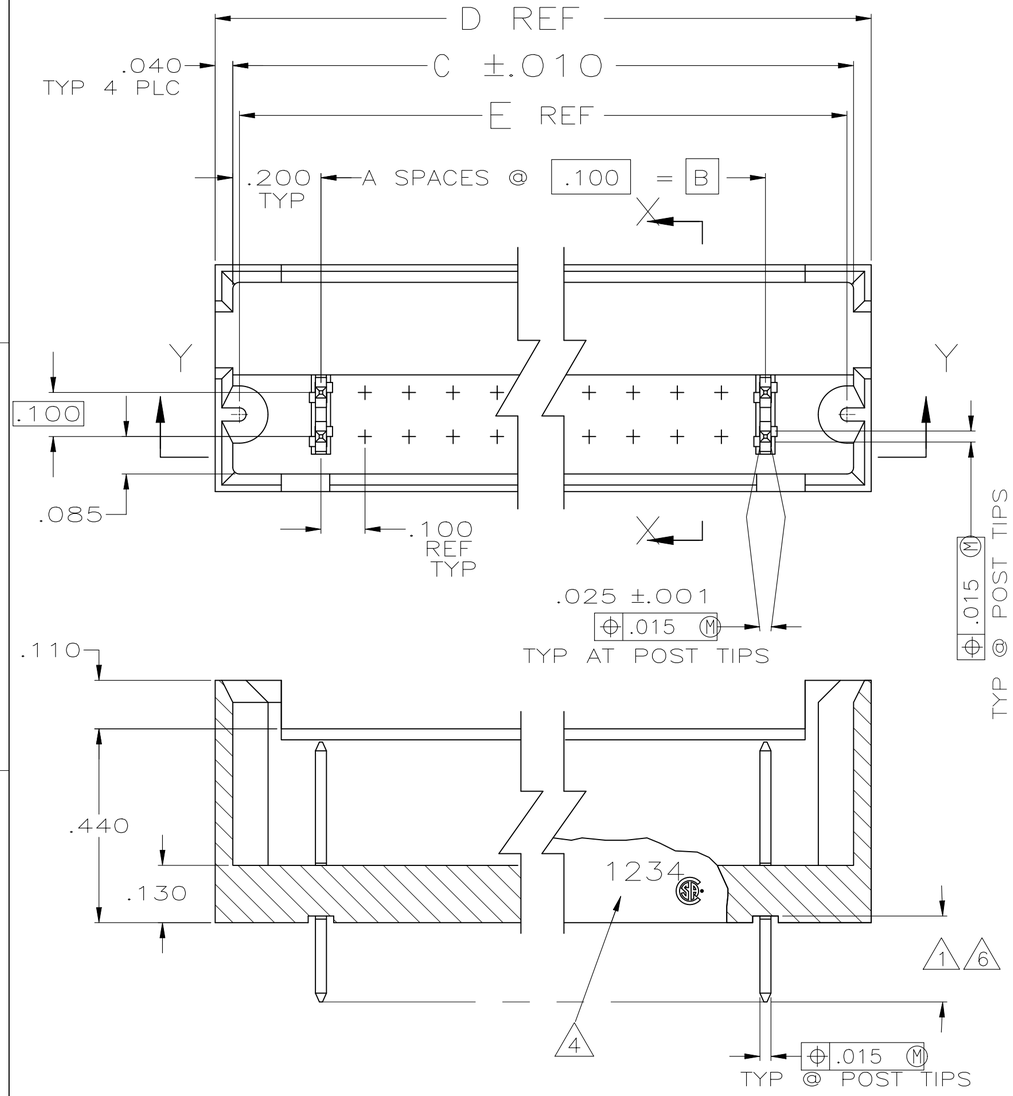

SECT Y — Y

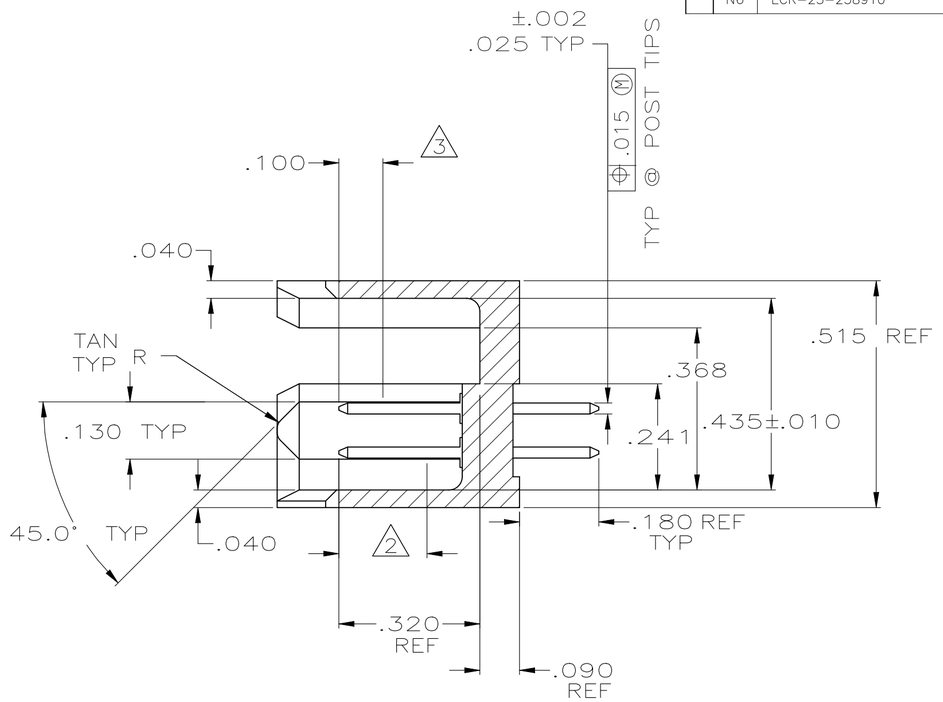

SECTION X — X

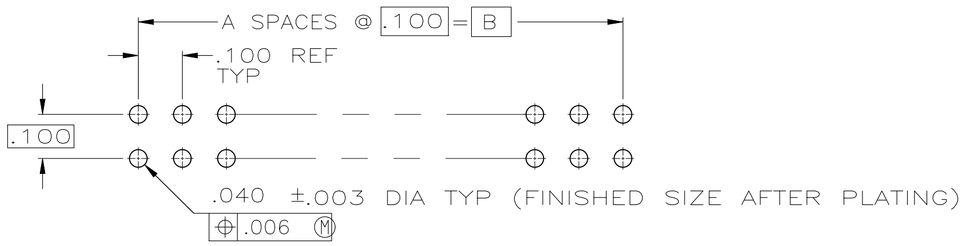

RECOMMENDED DRILL SIZE: 1.15MM= .0452±.0010

RECOMMENDED HOLE LAYOUT

1. FINISH OVER INDICATED AREA: .000100–.000200 BRIGHT TIN LEAD OVER .000050 NICKEL.
2. FINISH OVER INDICATED AREA: .000015 GOLD OVER .000050 NICKEL.
3. POINT OF MEASUREMENT FOR PLATING THICKNESS.
4. RECESSED DATE CODE AND CSA LOGO.
5. OBSOLETE PART NUMBER.
6. FINISH OVER INDICATED AREA: .000100–.000200 MATTE TIN OVER .000050 NICKEL.
7. PRELIMINARY PART.
8. ROHS 2002/95/EC COMPLIANT
9. HEADER: GLASS–FILLED, FLAME RETARDANT THERMOPLASTIC COLOR: BLACK
   POST: COPPER ALLOY
10. OBSOLETE PARTS: OBSOLETE CIS STREAMLINING PER D.RENAUD/D.SINISI

THIS DRAWING IS A CONTROLLED DOCUMENT.

DIMENSIONS: mm

TOLERANCES UNLESS OTHERWISE SPECIFIED:

0 PLC	± –
1 PLC	± –
2 PLC	± –
3 PLC	± .005
4 PLC	± –
ANGLES	± –

MATERIAL 9

FINISH SEE NOTES

DWN	B. HAYMAKER	30MAR00
CHK	J. GESFORD	30MAR00
APVD	J. GESFORD	30MAR00
PRODUCT SPEC	—	
APPLICATION SPEC	—	
WEIGHT	—	

TE Connectivity Ltd.

NAME: HEADER ASSEMBLY, MOD II, .100 X .100CL

SIZE	CAGE CODE	DRAWING NO	RESTRICTED TO
A2	00779	C-102567	—

CUSTOMER DRAWING | SCALE 4:1 | SHEET 1 OF 2 | REV N6

102567

1471-9 (1/15)

© – TE Connectivity. All Rights Reserved.

REVISIONS					
P	LTR	DESCRIPTION	DATE	DWN	APVD
	–	SEE SHEET 1	–	—	—

	5		1.870	1.980	1.900	1.500	15	32	8 ~~7–102567–9~~
10	OBSOLETE		9.270	9.380	9.300	8.900	89	180	8 ~~7–102567–8~~
	5		7.670	7.780	7.700	7.300	73	148	8 ~~7–102567–7~~
	5		6.670	6.780	6.700	6.300	63	128	8 ~~7–102567–6~~
	5		4.970	5.080	5.000	4.600	46	94	8 ~~7–102567–5~~
	5		2.470	2.580	2.500	2.100	21	44	8 ~~7–102567–4~~
10	OBSOLETE		.970	1.080	1.000	.600	6	14	8 ~~7–102567–3~~
	5		8.270	8.380	8.300	7.900	79	160	8 ~~7–102567–2~~
10	OBSOLETE		10.270	10.380	10.300	9.900	99	200	8 ~~7–102567–1~~
	5		7.270	7.380	7.300	6.900	69	140	8 ~~7–102567–0~~
10	OBSOLETE		6.770	6.880	6.800	6.400	64	130	8 ~~6–102567–9~~
	5		1.070	1.180	1.100	.700	7	16	8 ~~6–102567–8~~
10	OBSOLETE		4.570	4.680	4.600	4.200	42	86	8 ~~6–102567–7~~
			3.870	3.980	3.900	3.500	35	72	8 ~~6–102567–6~~
			5.770	5.880	5.800	5.400	54	110	8 6–102567–5
10	OBSOLETE		4.770	4.880	4.800	4.400	44	90	8 ~~6–102567–4~~
		2 6	1.770	1.880	1.800	1.400	14	30	8 6–102567–3
			2.270	2.380	2.300	1.900	19	40	8 6–102567–2
			1.270	1.380	1.300	.900	9	20	8 6–102567–1
			3.770	3.880	3.800	3.400	34	70	8 6–102567–0
10	OBSOLETE		5.270	5.380	5.300	4.900	49	100	8 ~~5–102567–9~~
			4.270	4.380	4.300	3.900	39	80	8 5–102567–8
10	OBSOLETE		6.270	6.380	6.300	5.900	59	120	8 ~~5–102567–7~~
			2.770	2.880	2.800	2.400	24	50	8 5–102567–6
10	OBSOLETE		5.070	5.180	5.100	4.700	47	96	8 ~~5–102567–5~~
			3.270	3.380	3.300	2.900	29	60	8 5–102567–4
			2.070	2.180	2.100	1.700	17	36	8 5–102567–3
			1.470	1.580	1.500	1.100	11	24	8 5–102567–2
			.870	.980	.900	.500	5	12	8 5–102567–1
		FINISH	E	D	C	B	A	NO. OF POSN	PART NUMBER

SUPERSEDED BY 5–102567–1		2 6	.870	.980	.900	.500	5	12	3–102567–0
8 7	OBSOLETE		1.870	1.980	1.900	1.500	15	32	~~2–102567–9~~
10	OBSOLETE		9.270	9.380	9.300	8.900	89	180	~~2–102567–8~~
	OBSOLETE		7.670	7.780	7.700	7.300	73	148	~~2–102567–7~~
	OBSOLETE		6.670	6.780	6.700	6.300	63	128	~~2–102567–6~~
	OBSOLETE		4.970	5.080	5.000	4.600	46	94	~~2–102567–5~~
	OBSOLETE		2.470	2.580	2.500	2.100	21	44	~~2–102567–4~~
			.970	1.080	1.000	.600	6	14	2–102567–3
5	OBSOLETE		8.270	8.380	8.300	7.900	79	160	~~2–102567–2~~
	5		10.270	10.380	10.300	9.900	99	200	~~2–102567–1~~
5	OBSOLETE		7.270	7.380	7.300	6.900	69	140	~~2–102567–0~~
	5		6.770	6.880	6.800	6.400	64	130	~~1–102567–9~~
5	OBSOLETE		1.070	1.180	1.100	.700	7	16	~~1–102567–8~~
10	OBSOLETE		4.570	4.680	4.600	4.200	42	86	~~1–102567–7~~
			3.870	3.980	3.900	3.500	35	72	1–102567–6
5	OBSOLETE		5.770	5.880	5.800	5.400	54	110	~~1–102567–5~~
10	OBSOLETE		4.770	4.880	4.800	4.400	44	90	~~1–102567–4~~
SUPERSEDED BY 6–102567–3		1 2	1.770	1.880	1.800	1.400	14	30	1–102567–3
			2.270	2.380	2.300	1.900	19	40	1–102567–2
SUPERSEDED BY 6–102567–1			1.270	1.380	1.300	.900	9	20	1–102567–1
SUPERSEDED BY 6–102567–0			3.770	3.880	3.800	3.400	34	70	1–102567–0
			5.270	5.380	5.300	4.900	49	100	102567–9
			4.270	4.380	4.300	3.900	39	80	102567–8
10	OBSOLETE		6.270	6.380	6.300	5.900	59	120	~~102567–7~~
SUPERSEDED BY 5–102567–6			2.770	2.880	2.800	2.400	24	50	102567–6
10	OBSOLETE		5.070	5.180	5.100	4.700	47	96	~~102567–5~~
SUPERSEDED BY 5–102567–4			3.270	3.380	3.300	2.900	29	60	102567–4
SUPERSEDED BY 5–102567–3			2.070	2.180	2.100	1.700	17	36	102567–3
			1.470	1.580	1.500	1.100	11	24	102567–2
			.870	.980	.900	.500	5	12	102567–1
		FINISH	E	D	C	B	A	NO. OF POSN	PART NUMBER

102567

THIS DRAWING IS A CONTROLLED DOCUMENT.

DIMENSIONS: mm

TOLERANCES UNLESS OTHERWISE SPECIFIED:
0 PLC ± –
1 PLC ± –
2 PLC ± –
3 PLC ± .005
4 PLC ± –
ANGLES ± –

MATERIAL –

FINISH SEE NOTES

DWN B. HAYMAKER 30MAR00
CHK J. GESFORD 30MAR00
APVD J. GESFORD 30MAR00
PRODUCT SPEC —
APPLICATION SPEC —
WEIGHT —

TE Connectivity Ltd.

NAME HEADER ASSEMBLY, MOD II, .100 X .100CL

SIZE A2 | CAGE CODE 00779 | DRAWING NO C-102567 | RESTRICTED TO —

CUSTOMER DRAWING | SCALE 4:1 | SHEET 2 OF 2 | REV N6