© 2026 TE Connectivity. All Rights Reserved.

REVISIONS					
P	LTR	DESCRIPTION	DATE	DWN	APVD
	C1	PART STATUS CHANGE TO DISCONTINUNACE	13JUL2026	NS	PS

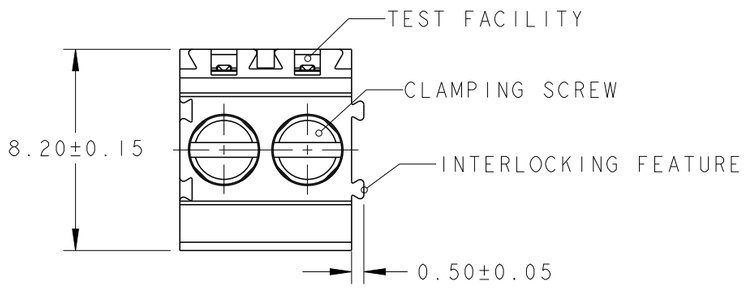

1. MATERIALS AND FINISH
   HOUSING : PA 6.6, UL 94-V0, COLOR GREEN.
   CLAMP : BRASS, NICKEL PLATED
   TERMINAL : BRASS, TIN PLATED
   CLAMPING SCREW : M3, BRASS, NICKEL PLATED
2. SUITABLE FOR 1.6-2.4 mm. PC BOARD THICKNESS.
3. END-TO-END STACKABLE W/INTERLOCK WITHOUT LOSS OF CENTERLINE SPACING
4. WIRE SIZE RANGE: 14 - 30 AWG
5. NOT CUMULATIVE TOLERANCE
6. CAGE CLAMPS TO BE IN THE CLOSED POSITION.

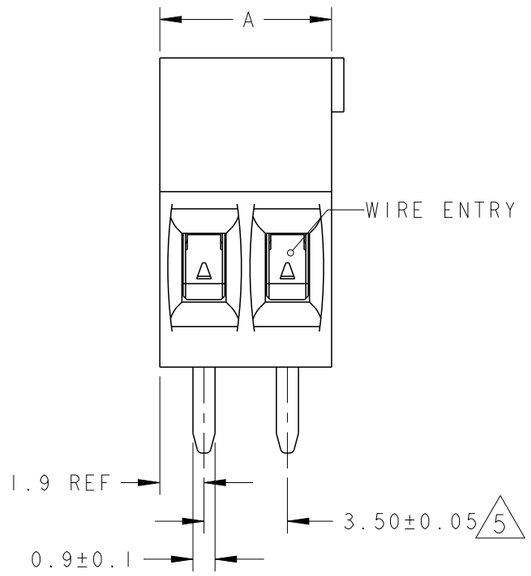

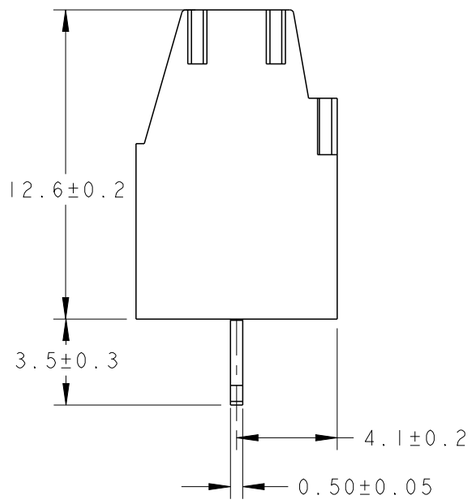

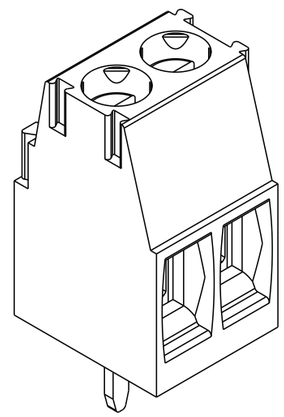

284391-2 AS SHOWN

	DIM "A"	NO OF POS.	PART NUMBER
6	OBSOLETE	14.0	4	2-284391-8
6	OBSOLETE	10.5	3	2-284391-7
6	OBSOLETE	7.0	2	2-284391-6
	OBSOLETE	87.5	25	2-284391-5
	OBSOLETE	84.0	24	2-284391-4
	OBSOLETE	80.5	23	2-284391-3
	OBSOLETE	77.0	22	2-284391-2
	OBSOLETE	73.5	21	2-284391-1
	OBSOLETE	70.0	20	2-284391-0
	OBSOLETE	66.5	19	1-284391-9
		63.0	18	1-284391-8
	OBSOLETE	59.5	17	1-284391-7
	OBSOLETE	56.0	16	1-284391-6
	OBSOLETE	52.5	15	1-284391-5
	OBSOLETE	49.0	14	1-284391-4
	OBSOLETE	45.5	13	1-284391-3
		42.0	12	1-284391-2
		38.5	11	1-284391-1
		35.0	10	1-284391-0
		31.5	9	284391-9
		28.0	8	284391-8
		24.5	7	284391-7
		21.0	6	284391-6
		17.5	5	284391-5
		14.0	4	284391-4
		10.5	3	284391-3
		7.0	2	284391-2

RECOMMENDED PC BOARD LAYOUT

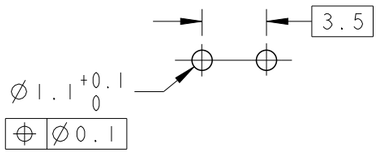

THIS DRAWING IS A CONTROLLED DOCUMENT.

DIMENSIONS: mm

TOLERANCES UNLESS OTHERWISE SPECIFIED:
0 PLC ±-
1 PLC ±.3
2 PLC ±.25
3 PLC ±-
4 PLC ±-
ANGLES ±2

MATERIAL 1-

FINISH 1-

DWN E. ZANOLINI 01FEB2002
CHK E. ZANOLINI 01FEB2002
APVD D. BIEVENOUR 01FEB2002
PRODUCT SPEC 108-20166
APPLICATION SPEC 114-20079
WEIGHT -

CUSTOMER DRAWING

TE Connectivity

NAME TERMINAL BLOCK PCB, MOUNT STRAIGHT SIDE WIRE ENTRY, STACKING W/ INTERLOCK, 3.5mm PITCH

SIZE	CAGE CODE	DRAWING NO	RESTRICTED TO
A3	00779	C-284391	-

SCALE	SHEET	REV
4:1	1 OF 1	C1