© – TE Connectivity. All Rights Reserved.

AMP WIRE RANGE	c UL us LISTED FILE E13288	LR189 CERTIFIED
22–16 AWG SOLID OR STRANDED	22–16 AWG SOLID OR STRANDED	22–16 AWG SOLID OR STRANDED

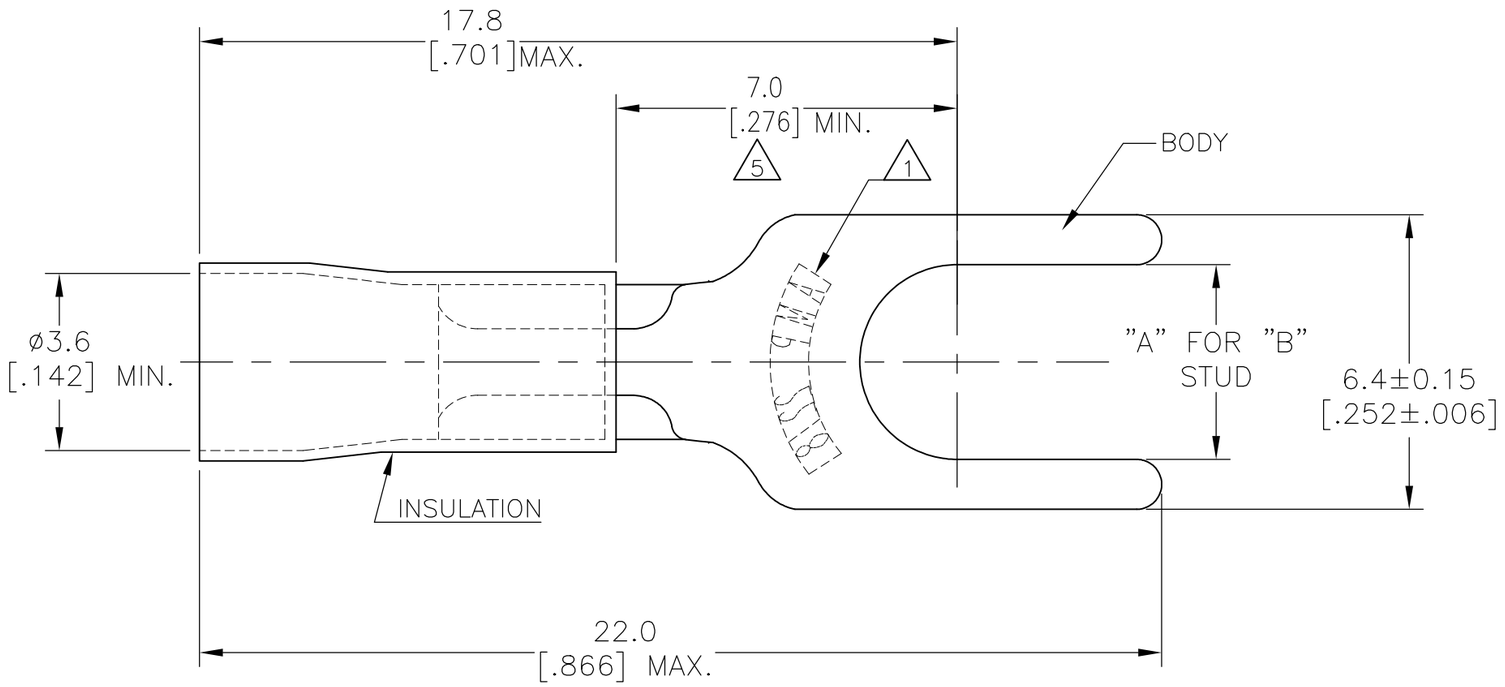

#8(M4)	4.343±0.076 [.171±.003]	171551–1
#5(M3)	3.429±0.076 [.135±.003]	171551–2
"B"	"A"	PART NUMBER

REVISIONS

P	LTR	DESCRIPTION	DATE	DWN	APVD
	C2	REVISED PER ECR–26–278585	11JUL2026	GSK	DEP

NOTE:

1. STAMP AMP 22–18* APPROX AS SHOWN 22–16 TERMINALS ARE STAMPED 22–18 IN ACCORDANCE WITH MILITARY SPEC SAE AS7928 COMMERCIAL WIRE RANGE IS 22–16
2. WIRE INSULATION DIAMETER: ø2.700 [.106] TO ø3.600 [.142]
3. BODY MATERIAL THK: 0.787±0.051 [.031±.002]
4. MATERIAL : BODY–COPPER ASTM B152
   INSULATION – PVC
5. APPLIES FROM CENTER OF STUD HOLE TO EDGE OF METAL WIRE BARREL
6. FINISH:
   BODY – TIN PLATING .000100 [.002540] MIN THK PER ASTM B545
   INSULATION COLOR–RED

QTY	PACKAGE TYPE	PART NO
1000	LOOSE PIECE	171551–1
1000	LOOSE PIECE	171551–2

MAX RECOMMENDED OPERATING TEMPERATURE: 105°C [221°F]

VOLTAGE RATING: 600V MAX [1000V SIGNS OR FIXTURES]

WIRE CROSS SECTIONAL AREA RANGE: 0.26~1.04mm² [509–2,052] STRANDED OR SOLID WIRE

THIS DRAWING IS A CONTROLLED DOCUMENT.

DIMENSIONS: mm [INCHES]

TOLERANCES UNLESS OTHERWISE SPECIFIED:
0 PLC ± –
1 PLC ± 0.4 [.016]
2 PLC ± –
3 PLC ± –
4 PLC ± –
ANGLES ± 1°

MATERIAL 4

FINISH 6

DWN SATHISH KUMAR G 11JUL2026
CHK DANIEL E. PEDIA, JR. 11JUL2026
APVD DANIEL E. PEDIA, JR. 11JUL2026
PRODUCT SPEC UL 486A–B
APPLICATION SPEC 114–2161
WEIGHT

CUSTOMER DRAWING

TE Connectivity

NAME TERMINAL, RING TONGUE, PLAST–GRIP
WIRE SIZE: 22–16 AWG

SIZE	CAGE CODE	DRAWING NO	RESTRICTED TO
A3	00779	C–171551	–

SCALE	SHEET	REV
8:1	1 OF 1	C2