© 2024 TE Connectivity. All Rights Reserved.

| REVISIONS | | | | | |
|---|---|---|---|---|---|
| P | LTR | DESCRIPTION | DATE | DWN | APVD |
| | A | NEW DRAWING | 10JUN2024 | AN | JC |
| | A1 | MATERIAL GENERIC NAME UPDATED | 28MAY2025 | CK | SB |
| | | | | | |
| | | | | | |

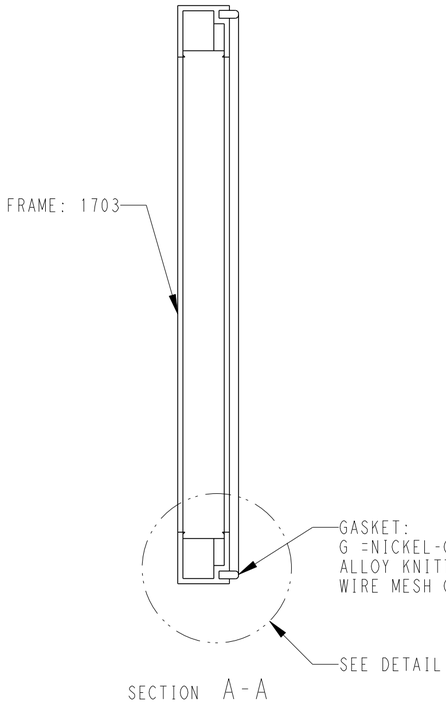


SECTION A-A

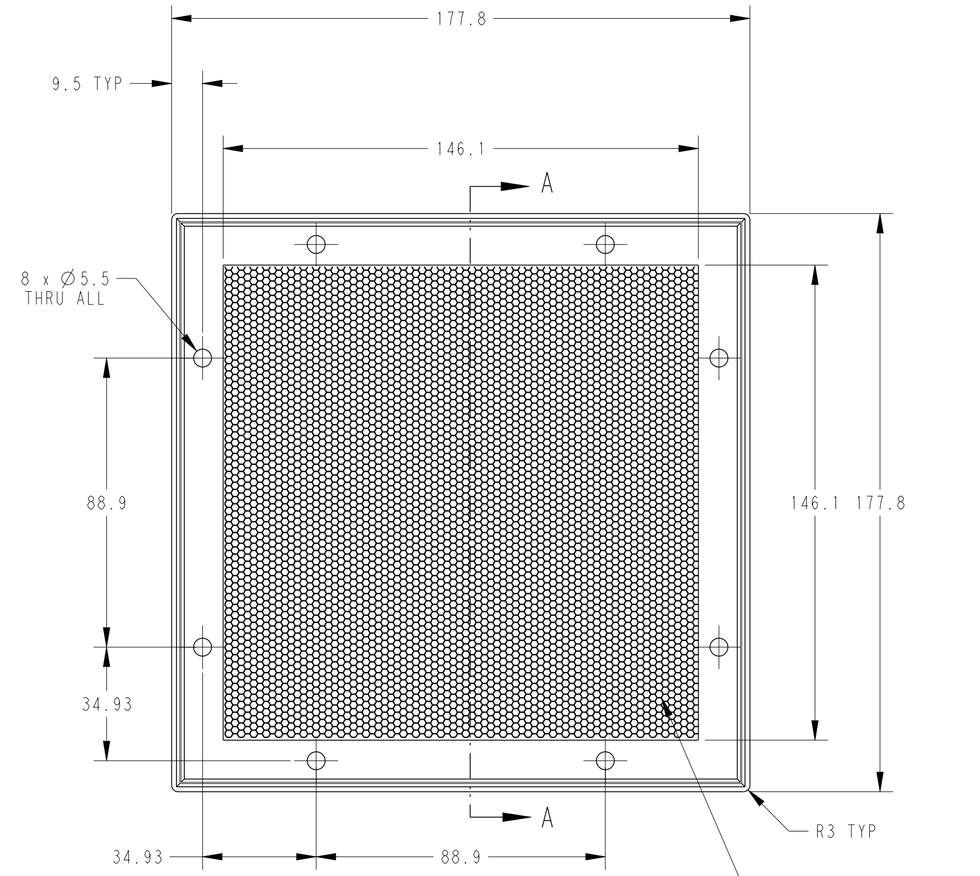


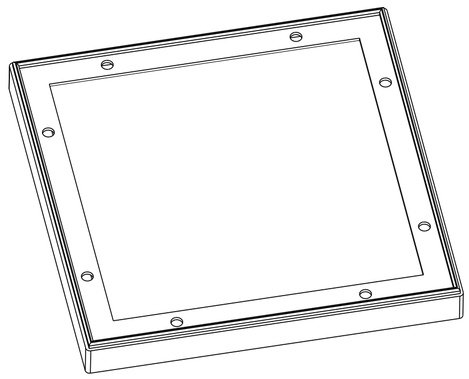

ISOMETRIC VIEW (NTS)

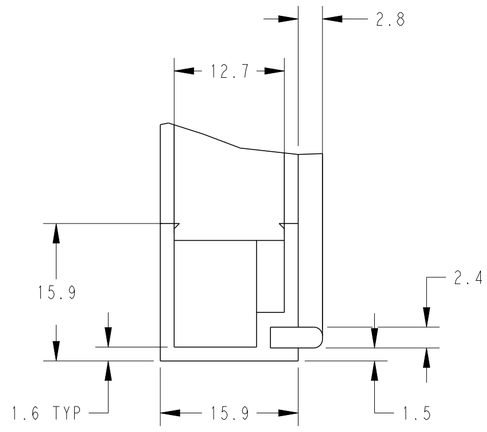


DETAIL A
SCALE 2:1

GENERAL TOLERANCES:
LINEAR: ±0.8
HOLE CENTRES: ±0.5
ANGULAR: ±0.5°

| SURTEC 650 | ALUMINIUM | 1703-1778-1778-T4-S-TH-G | 2489064-1 |
|---|---|---|---|
| FINISH | MATERIAL | ALIAS PART NUMBER | PART NUMBER |

THIS DRAWING IS A CONTROLLED DOCUMENT.

DIMENSIONS: mm

TOLERANCES UNLESS OTHERWISE SPECIFIED:
0 PLC ±
1 PLC ±0.1
2 PLC ±0.01
3 PLC ±0.001
4 PLC ±0.0001
ANGLES ±

MATERIAL: SEE TABLE -

FINISH: SEE TABLE

DWN 10JUN2024 AYESHABANU N
CHK 10JUN2024 BASAVARAJA D A
APVD 10JUN2024 JAMES CAVILL
PRODUCT SPEC -
APPLICATION SPEC -
WEIGHT -

TE Connectivity

NAME AL-HONEYCOMB-1703-177.8mm X 177.8mm

| SIZE | CAGE CODE | DRAWING NO | RESTRICTED TO |
|---|---|---|---|
| A2 | - | C-1703-1778-1778 | - |

CUSTOMER DRAWING | SCALE 1:4 | SHEET 1 OF 1 | REV A1