WiFi6 Dual Band Ceramic SMD Antenna 3.2x1.6x0.5 mm

Part Number: L000947-01
L000947-80

FEATURES & BENEFITS

- DUAL BAND WLAN/Bluetooth/IEEE802.11 a/b/g/n/ac Application.
- SMD Passive Ceramic Chip Antenna with evaluation board 80 x 40 mm^2
- Ultra low profile antenna suitable for IoT applications
- With matching circuits that designed on the evaluation board.

RF SPECIFICATIONS

Frequency Range (MHz)	2400-2484	5150-5850
Bandwidth (MHz)	84 MHz	700 MHz
VSWR (center frequency)	< 2.0:1	< 3.6:1
Peak Gain (Typ.)	2.7 dBi	2.8 dBi
Average Gain (Typ.)	-1.5 dB	-2.1 dB
Efficiency (Typ.)	71 %	51 %
Feed Point Impedance	50 ohms	
Polarization	Linear Polarization	

MECHANICAL SPECIFICATIONS

Size (L x W x H)	3.2 mm x 1.6 mm x 0.5 mm (L/W/H ± 0.15)
Weight	< 0.1 g
Mounting	SMD (Surface Mount Device)
Mating Connector	N/A
Cable	N/A
Operating Temperature	-40 to + 85°C
Storage Temperature	-5 to + 40°C
Dielectric Material	Ceramic
Hazardous Materials	A certificate of conformance is available from the product page on TE website.

RF DATA

(shown as L000947-01 : Ground size : 80 x 40 x 1 mm.)

VSWR

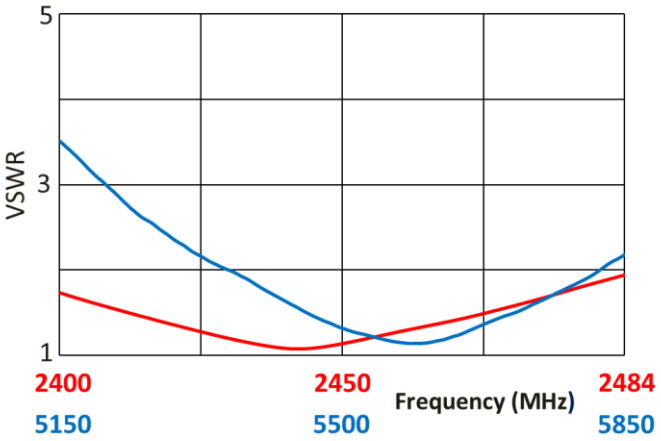

Return Loss

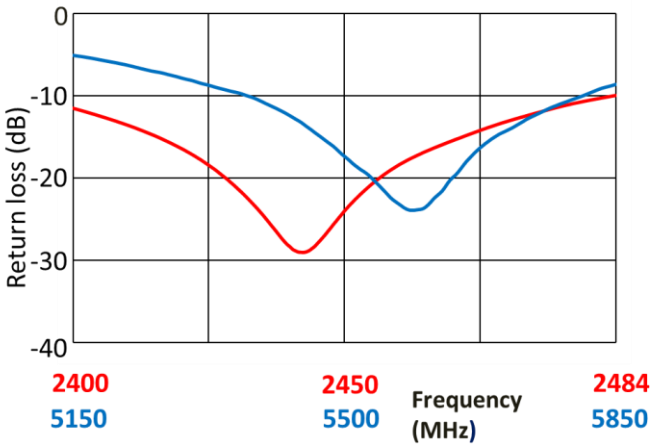

Peak Gain

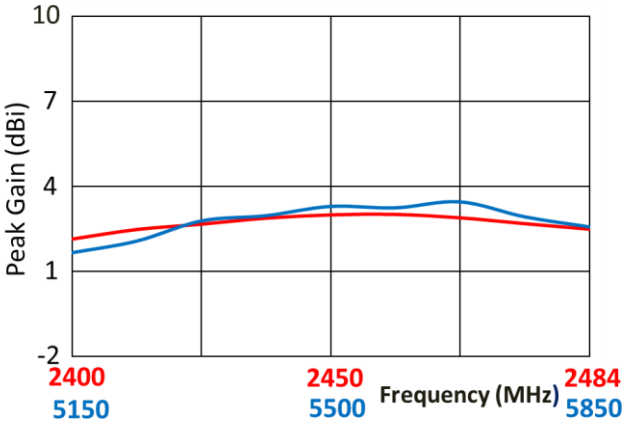

Efficiency

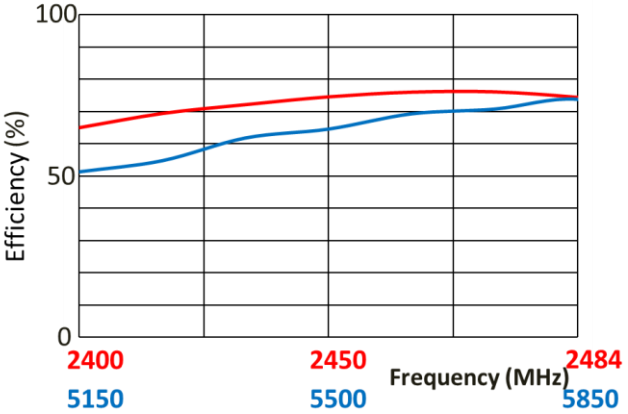

Data measured in free space and on reference ground plane of 80x40x1 mm ground plane condition, application data might vary.

RADIATION PATTERN

(shown as L000947-01 : Ground size : 80 x 40 x 1 mm.)

Test setup

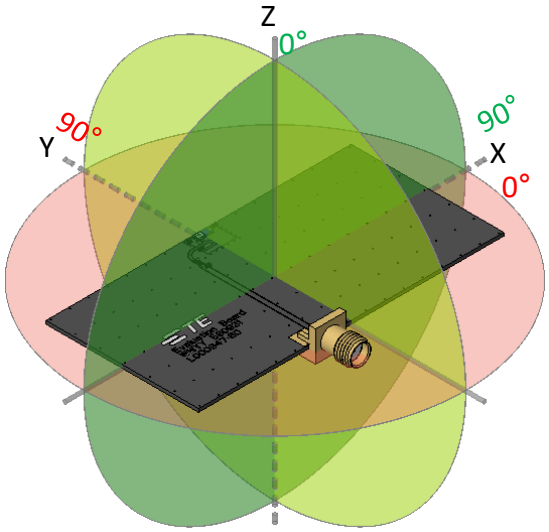

Azimuth Plane (XY)
Elevation 1 Plane (XZ)
Elevation 2 Plane (YZ)

Azimuth (XY)

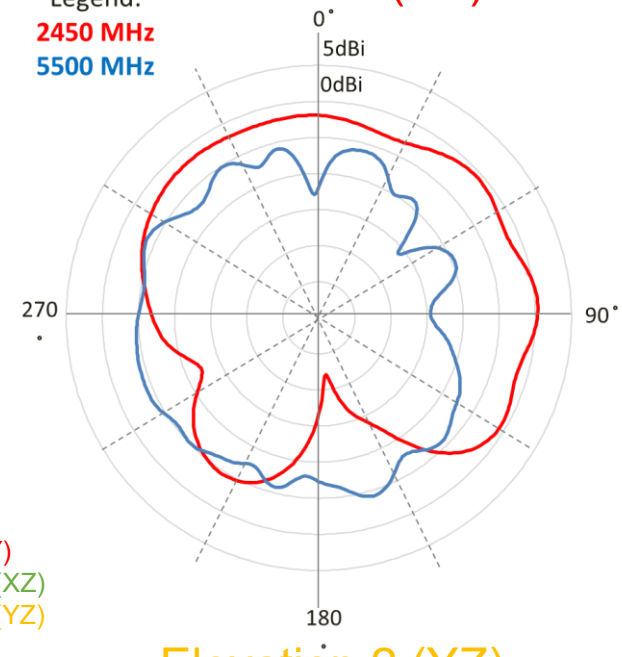

Elevation 1(XZ)

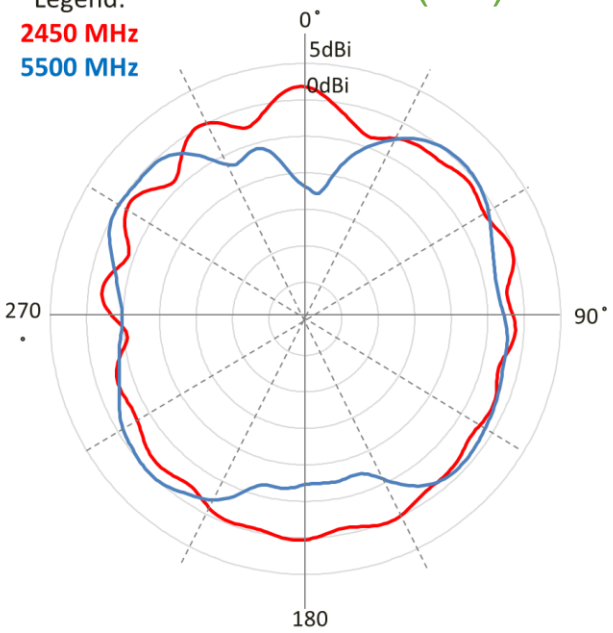

Elevation 2 (YZ)

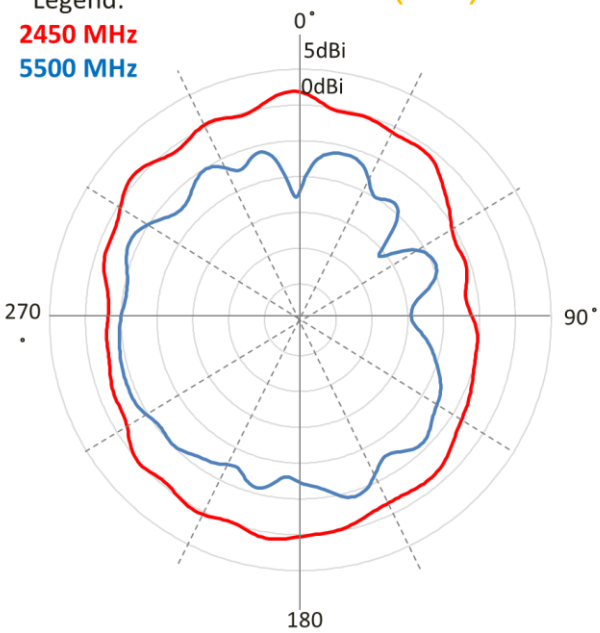

Data measured in free space and on reference ground plane of 80x40x1 mm ground plane condition, application data might vary.

MOUNTING GUIDE AND MATCHING CIRCUIT

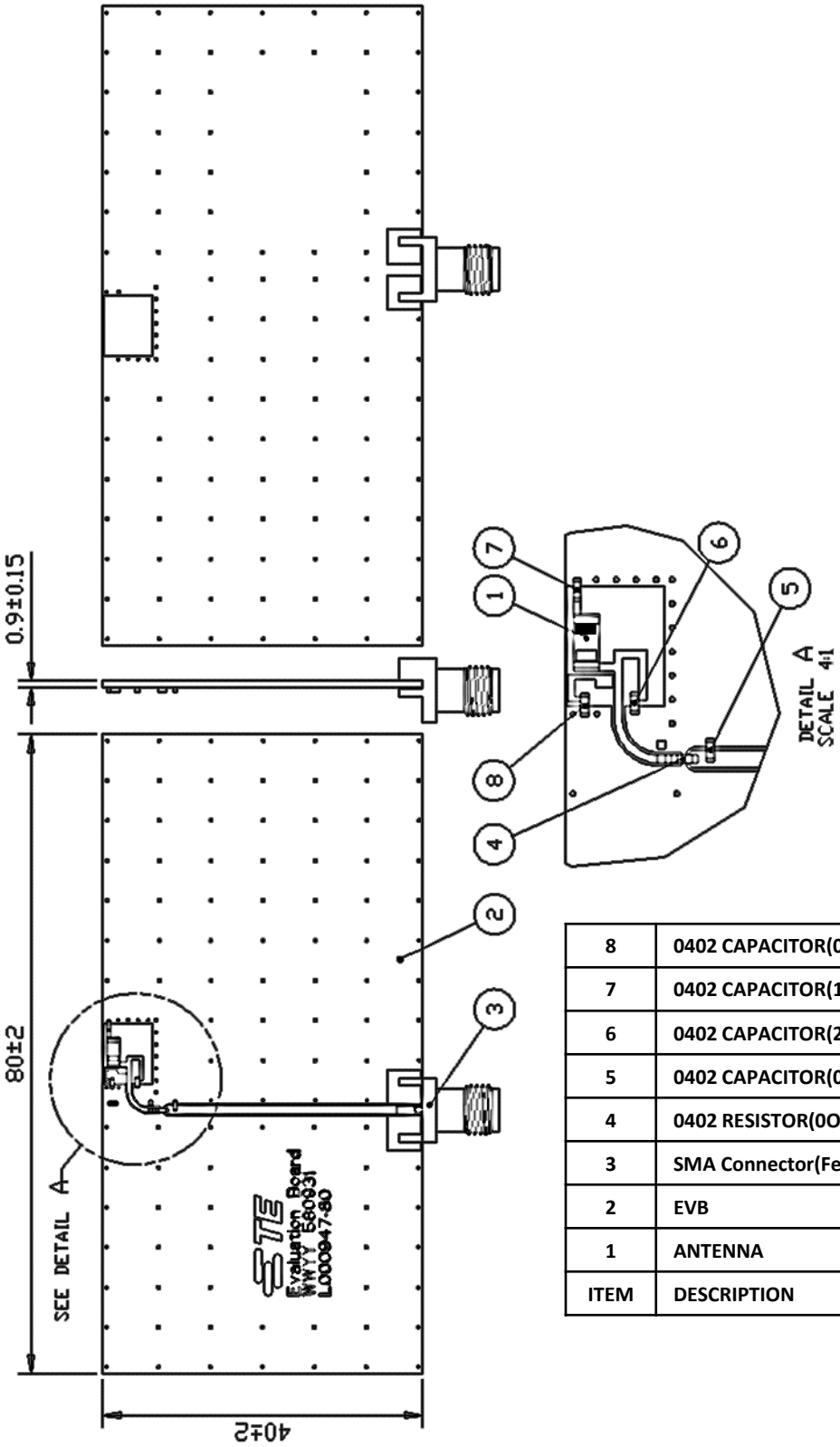

ITEM	DESCRIPTION	Q'TY(PC)
8	0402 CAPACITOR(0.3pF)	1
7	0402 CAPACITOR(1pF)	1
6	0402 CAPACITOR(22pF)	1
5	0402 CAPACITOR(0.2pF)	1
4	0402 RESISTOR(0Ohm)	1
3	SMA Connector(Female)	1
2	EVB	1
1	ANTENNA	1

Dimension: mm
Tolerance : ±0.2mm
Diagrams is not to scale

MOUNTING GUIDE AND MATCHING CIRCUIT

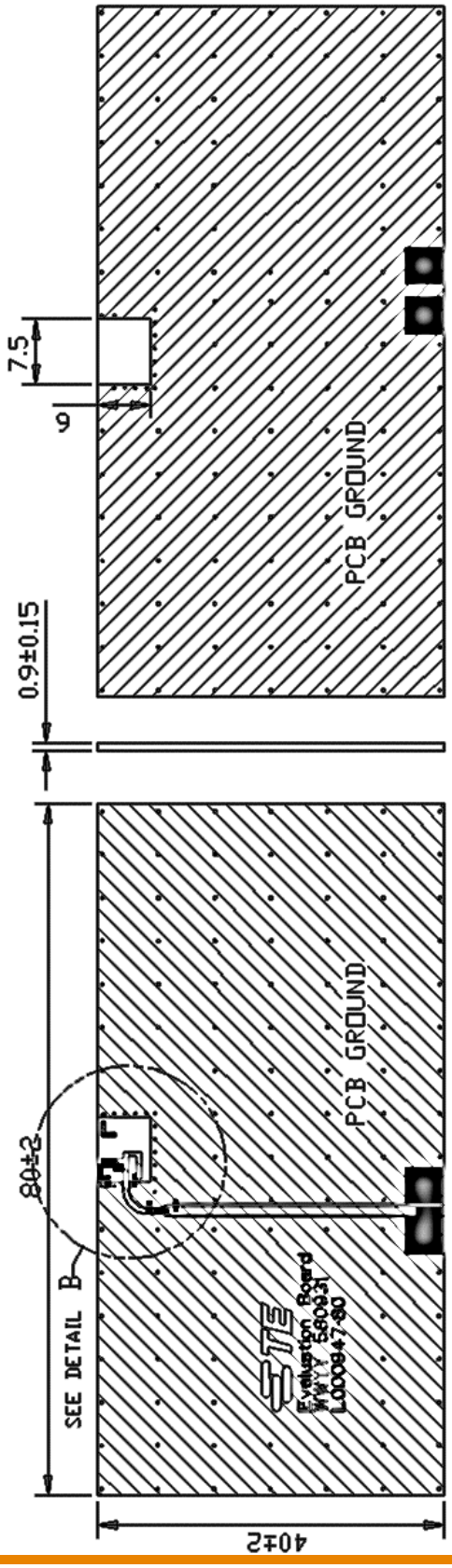

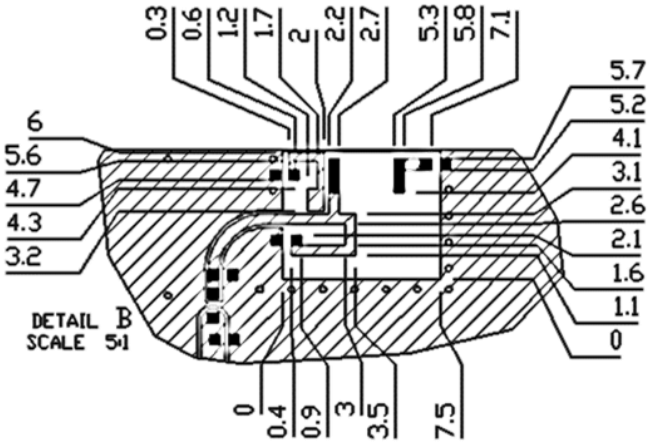

Dimension: mm
Tolerance : ±0.2mm
Diagrams is not to scale

KEEP OUT AREA

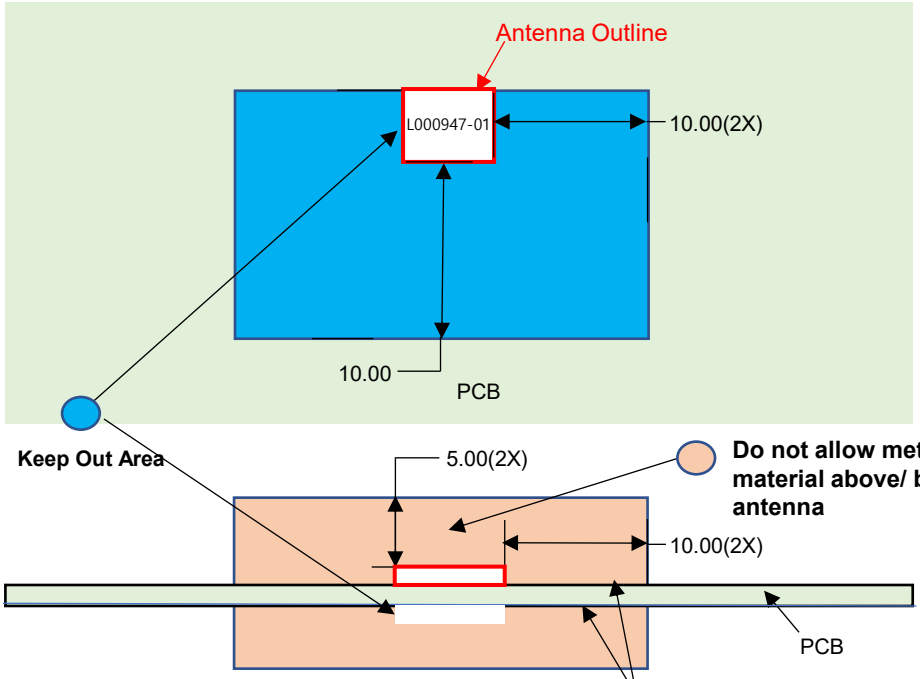

NOTES:1. Antenna designed to be mounted on PCB.
2. Area in white above indicates Keep Out Area.
3. Area in blue above indicates ground Area
4. For more information please call TE.

Dimensions: mm
Diagram is not to scale

DIMENSIONS

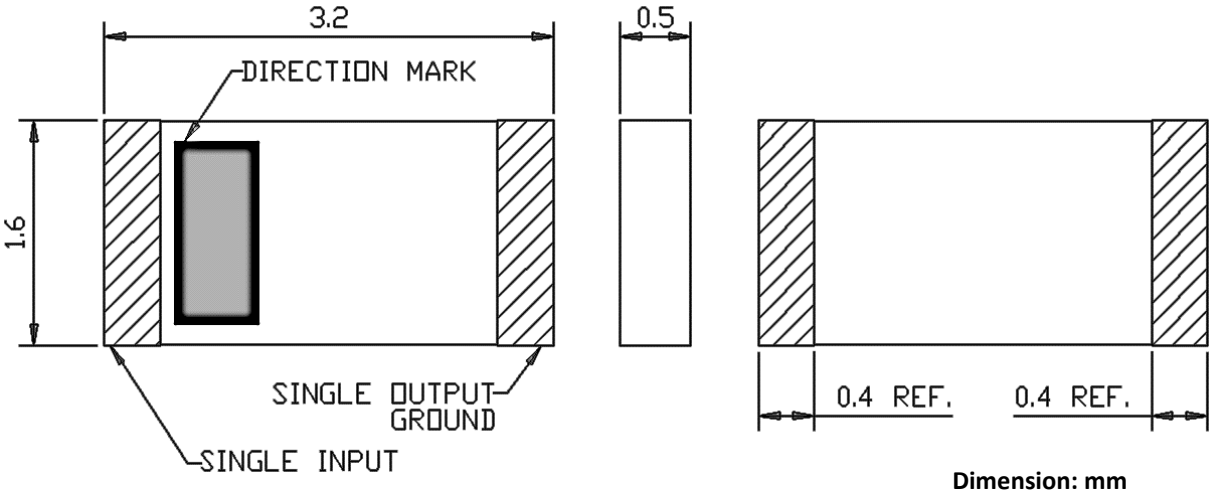

Dimension: mm
Tolerance : ±0.15mm
Diagrams is not to scale

PACKAGING

L000947-01 (REEL)

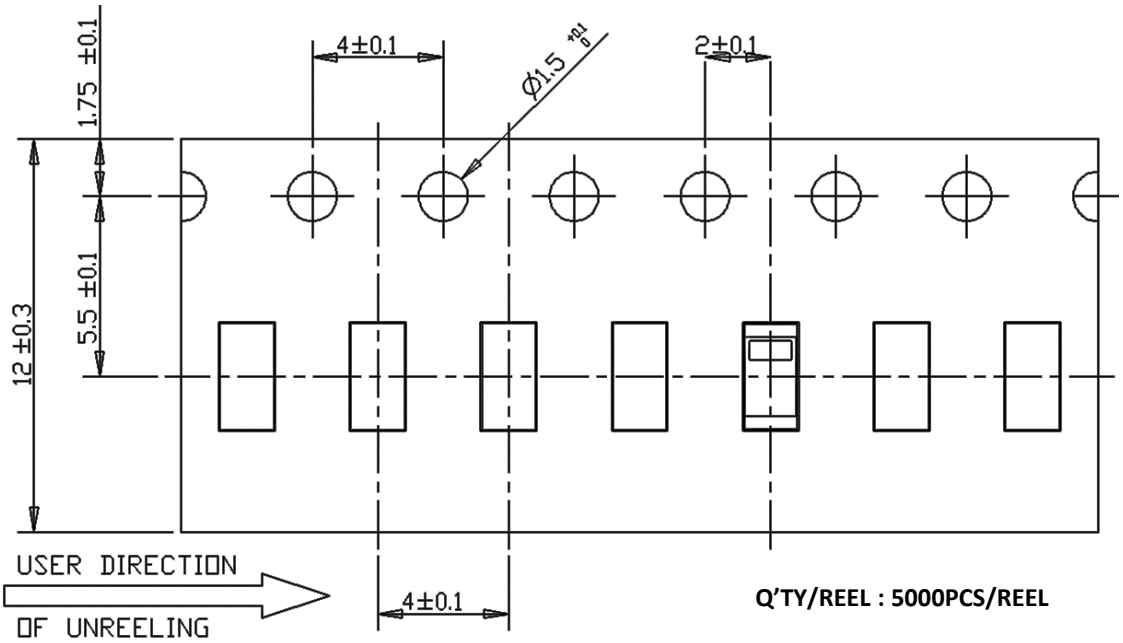

Q'TY/REEL : 5000PCS/REEL

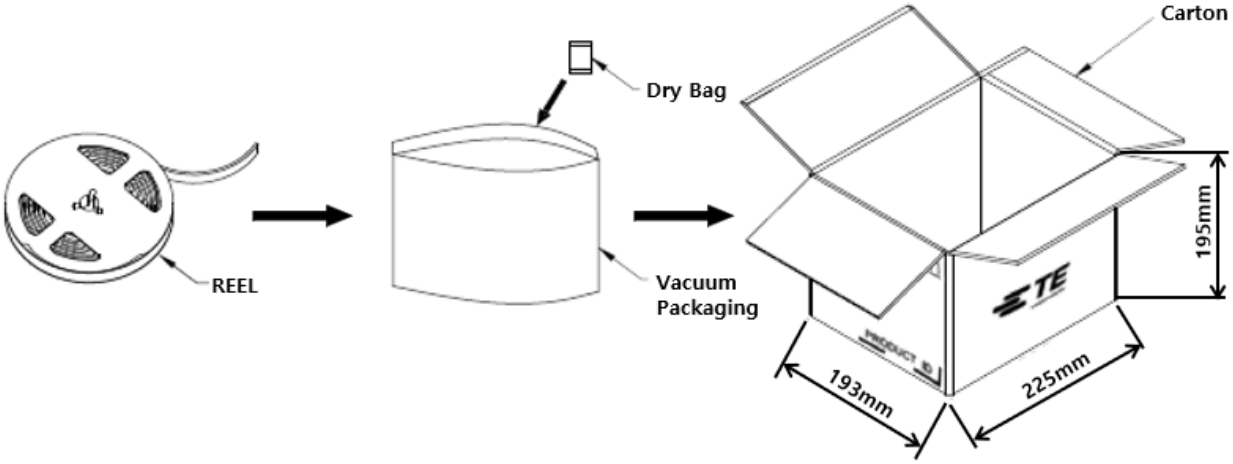

1Carton = 1REEL = 5000pcs
*** Using Air pillows for packaging**

PACKAGING

L000947-80 (BULK)

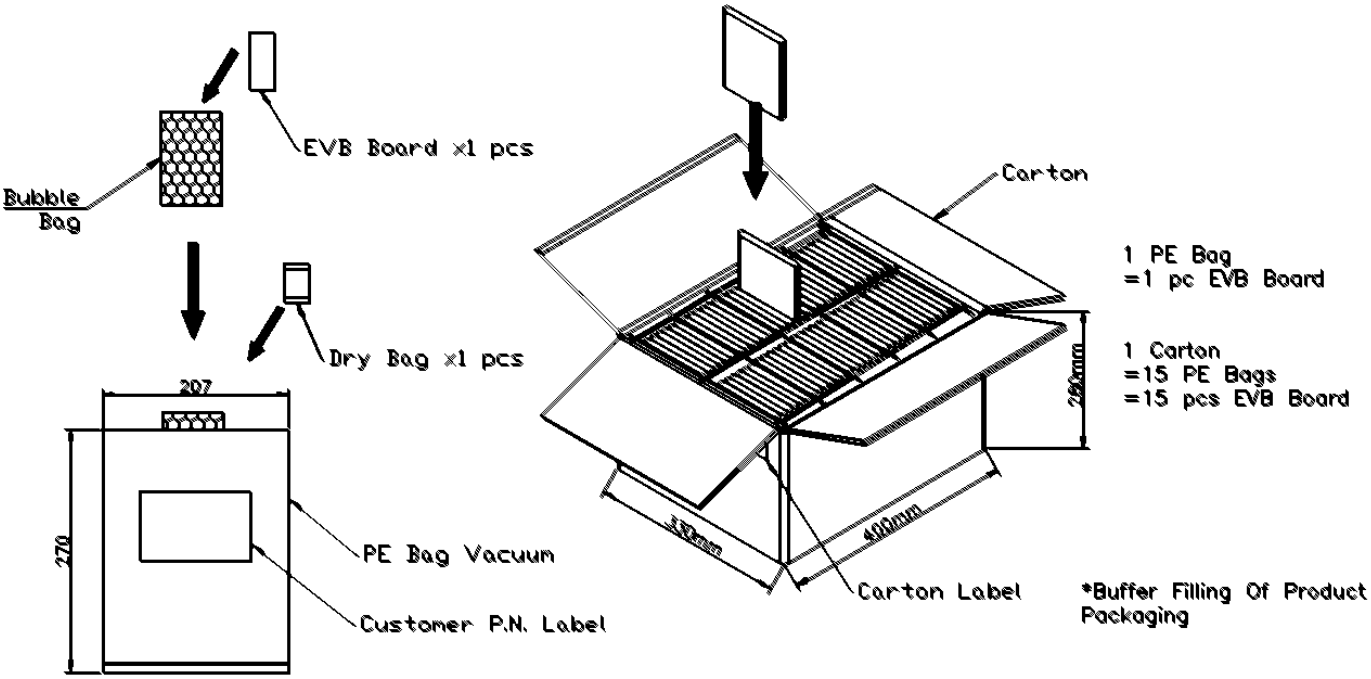

TE TECHNICAL SUPPORT CENTER

USA:	+1 (800) 522-6752
Canada:	+1 (905) 475-6222
Mexico:	+52 (0) 55-1106-0800
Latin/S. America:	+54 (0) 11-4733-2200
Germany:	+49 (0) 6251-133-1999
UK:	+44 (0) 800-267666
France:	+33 (0) 1-3420-8686
Netherlands:	+31 (0) 73-6246-999
China:	+86 (0) 400-820-6015

For phone numbers in other countries, go to te.com/support-center

te.com

TE Connectivity, TE Connectivity (logo) are trademarks. All other logos, products and/or company names referred to herein might be trademarks of their respective owners.

The information given herein, including drawings, illustrations and schematics which are intended for illustration purposes only, is believed to be reliable. However, TE Connectivity makes no warranties as to its accuracy or completeness and disclaims any liability in connection with its use. TE Connectivity's obligations shall only be as set forth in TE Connectivity's Standard Terms and Conditions of Sale for this product and in no case will TE Connectivity be liable for any incidental, indirect or consequential damages arising out of the sale, resale, use or misuse of the product. Users of TE Connectivity products should make their own evaluation to determine the suitability of each such product for the specific application.

© 2020 TE Connectivity Ltd. family of companies All Rights Reserved.

05/2021