© – TE Connectivity. All Rights Reserved.

REVISIONS					
P	LTR	DESCRIPTION	DATE	DWN	APVD
	B6	ECR–26–281441	25JUN2026	CR	AKA

(AS SHOWN : –6)

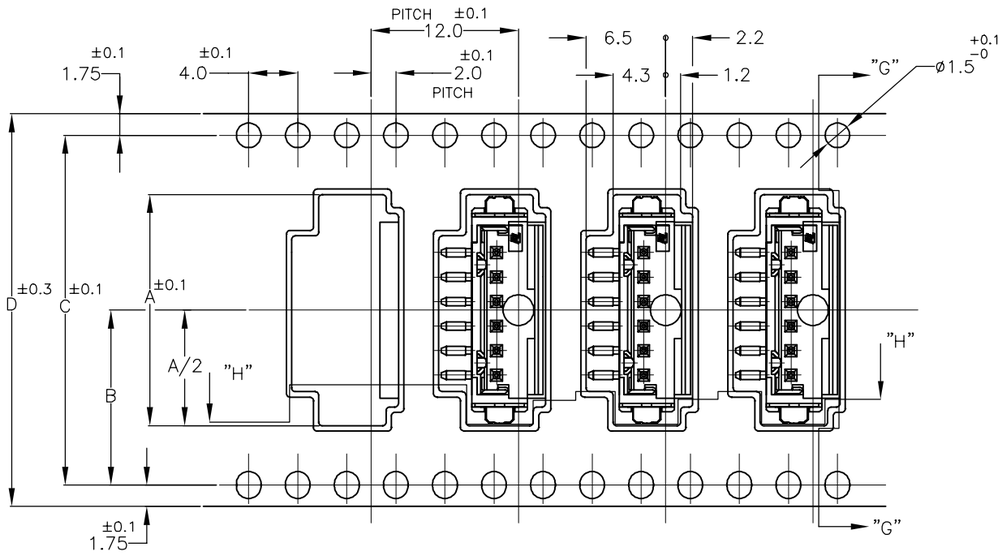

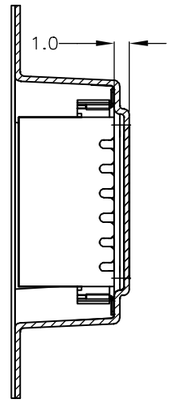

SECT "G"–"G"

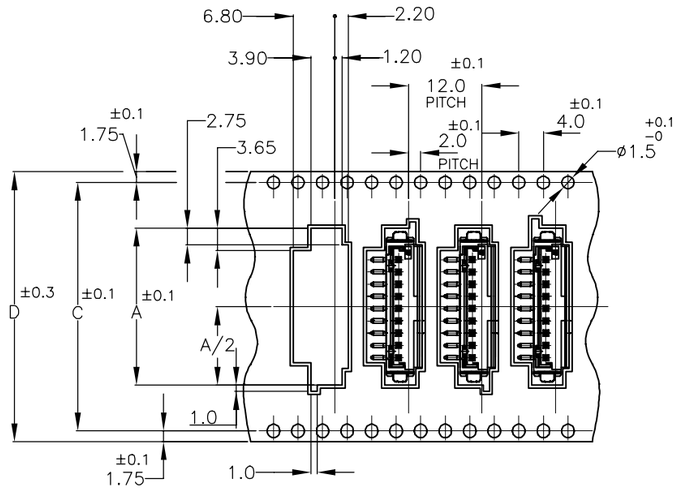

9P ONLY

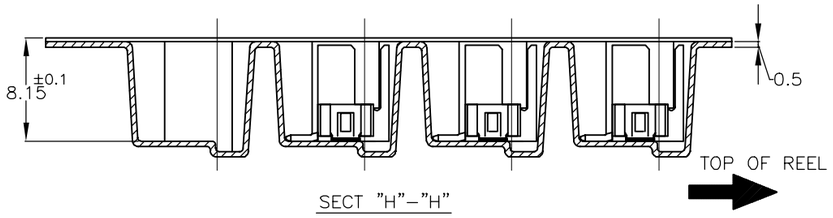

SECT "H"–"H"

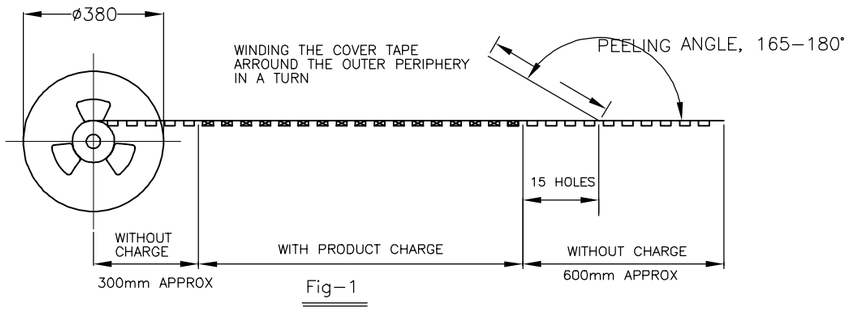

Fig–1

OBSOLETED	BLACK		44.0	40.50	20.25	25.60		9	2–292175–9
			44.0	40.4	20.2	22.9		8	2– –8
			32.0	28.4	14.2	20.9		7	2– –7
			32.0	28.4	14.2	18.9		6	2– –6
			32.0	28.4	14.2	16.9		5	2– –5
			32.0	28.4	14.2	14.9		4	2– –4
			32.0	28.4	14.2	12.9		3	2– –3
		WITH	32.0	28.4	14.2	10.9	700	2	2–292175–2
	NATURAL		44.0	40.50	20.25	25.60		9	292175–9
			44.0	40.4	20.2	22.9		8	–8
			32.0	28.4	14.2	20.9		7	–7
			32.0	28.4	14.2	18.9		6	–6
			32.0	28.4	14.2	16.9		5	–5
			32.0	28.4	14.2	14.9		4	–4
			32.0	28.4	14.2	12.9		3	–3
		WITH	32.0	28.4	14.2	10.9	700	2	292175–2
	COLOR	PLATE	D	C	B	A	QTY/ REEL	POS	TAPING P/N

NOTES:

1. PEELING RESISTANCE: 0.196N(20gf)–0.686N(70gf)
   SPEED: 300mm/min

THIS DRAWING IS A CONTROLLED DOCUMENT.

TOLERANCE UNLESS OTHERWISE SPECIFIED
10⩾✱ :±0.2
30⩾✱>10 :±0.25
100⩾✱>30 :±0.3
ANGLE :±3°

DIMENSIONS: mm

TOLERANCES UNLESS OTHERWISE SPECIFIED:
0 PLC ±
1 PLC ±
2 PLC ±
3 PLC ±
4 PLC ±
ANGLES ±

MATERIAL

FINISH

DWN	JACH HOU	19SEP10
CHK	MARTIN LI	19SEP10
APVD	STEVEN YAO	19SEP10
PRODUCT SPEC	108–60016	
APPLICATION SPEC		
WEIGHT		

CUSTOMER DRAWING

TE Connectivity Ltd.

NAME
EMBOSS
CT HEADER ASSY
BOX V SMT

SIZE	CAGE CODE	DRAWING NO	RESTRICTED TO
A3	00779	C–292175	—

SCALE	SHEET	REV
N/A	1 OF 3	B6

© – TE Connectivity. All Rights Reserved.

REVISIONS					
P	LTR	DESCRIPTION	DATE	DWN	APVD
	–	SEE SHEET 1	–	–	–

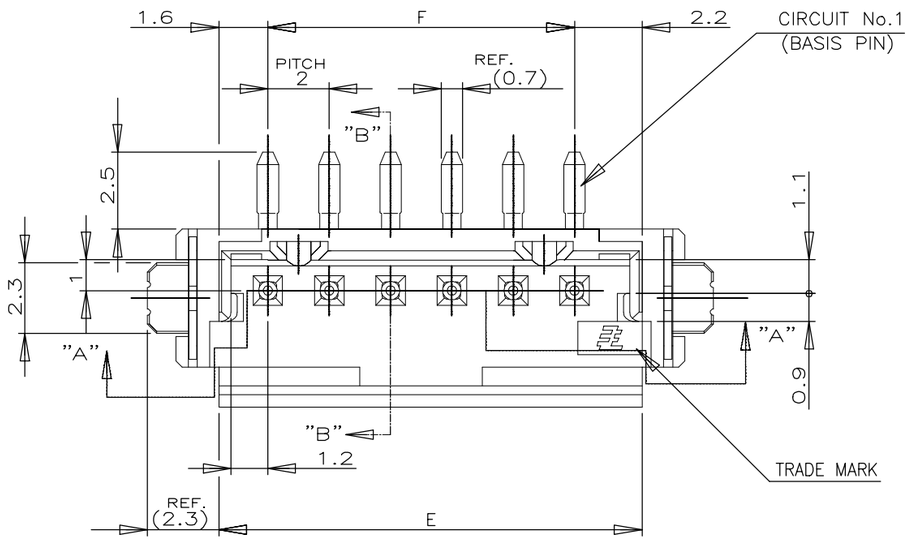

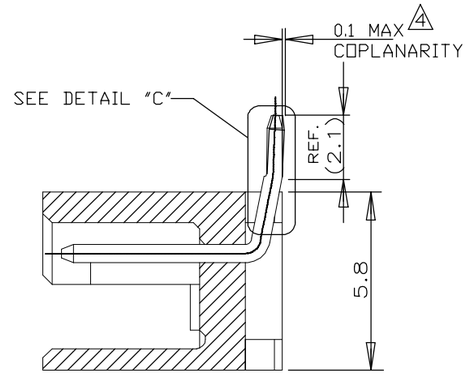

SECT "B"-"B"

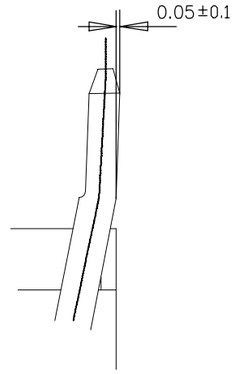

DETAIL "C"
SCALE 10:1

NOTES;

2. MATERIAL:HSG-NYLON (UL94V-0)
   COLOR:NATURAL,BLACK
   POST:TIN BRASS
   TAIL: TIN BRASS
3. OCCUPANT AREA ON PC BOARD
4. TO BE MEASURED WITH CONNECTOR PLACED ON HORIZONTAL DATUM SURFACE,FLOAT OF SOLDER TINE AND TAIL FROM DATUM SURFACE IS 0.1mm MAX
5. PARTS SHALL BE USED AS SOON AS POSSIBLE AFTER OPENING
6. IF STORAGE AFTER OPENING IS REQUIRED, PARTS SHALL BE KEPT IN A HUMIDITY-CONTROLLED ENVIRONMENT (E.G., DRY CABINET OR MOISTURE BARRIER BAG)

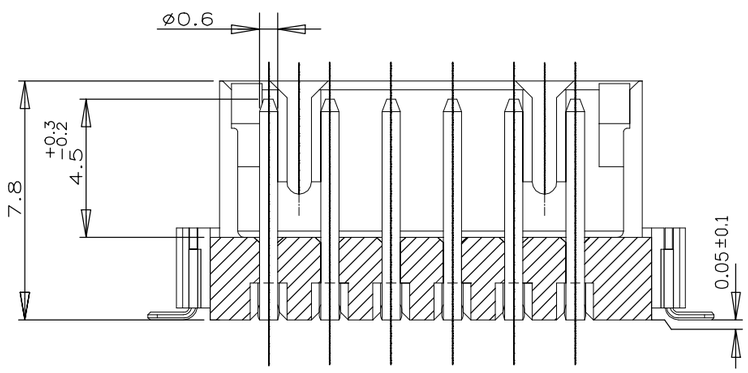

SECT "A"-"A"

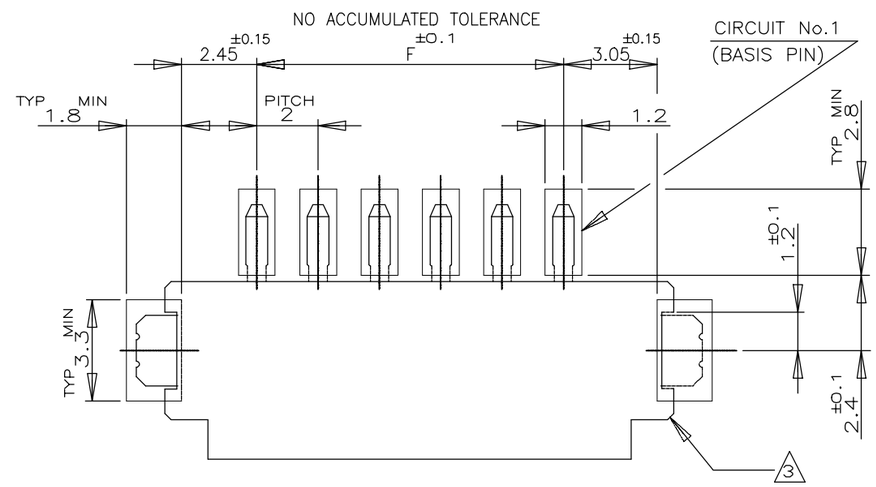

RECOMENOED P.C.BOARD LAYOUT
(P.C.B THK:0.8mm MIN)

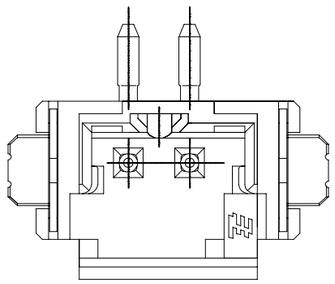

2 P

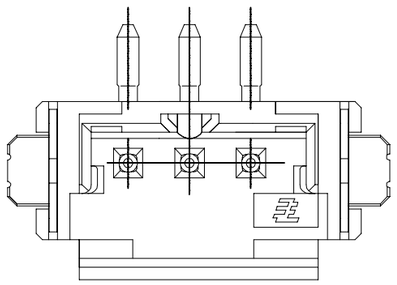

3 P

F	E	POS.	BLACK	NATURAL
			P/N	
16.0	19.8	9	2-292175-9	292175-9
14.0	17.8	8	2- -8	-8
12.0	15.8	7	2- -7	-7
~~10.0~~	~~13.8~~	~~6~~	~~2- -6~~	~~-6~~
8.0	11.8	5	2- -5	-5
6.0	9.8	4	2- -4	-4
4.0	7.8	3	2- -3	-3
2.0	5.8	2	2-292175-2	292175-2

TOLERANCES UNLESS OTHERWISE SPECIFIED:
10≥* : ±0.2
30≥*>10 : ±0.25
100≥*>30 : ±0.3
ANGEL : ±3°

THIS DRAWING IS A CONTROLLED DOCUMENT.

DIMENSIONS: mm

TOLERANCES UNLESS OTHERWISE SPECIFIED:
0 PLC ± –
1 PLC ± –
2 PLC ± –
3 PLC ± –
4 PLC ± –
ANGLES ± –

MATERIAL: SEE NOTE
FINISH: SEE NOTE

DWN –
CHK –
APVD –
PRODUCT SPEC: 108-60016
APPLICATION SPEC: –
WEIGHT: –

TE Connectivity Ltd.

NAME: ON TAPING (EMBOSS) SMT TYPE POST HDR ASS'Y(V) W/O BOSS &WITH TAIL TYPE

SIZE	CAGE CODE	DRAWING NO	RESTRICTED TO
A3	00779	C-292175	–

CUSTOMER DRAWING | SCALE N/A | SHEET 2 OF 3 | REV B6

© – TE Connectivity. All Rights Reserved.

REVISIONS					
P	LTR	DESCRIPTION	DATE	DWN	APVD
	–	SEE SHEET 1	–	–	–

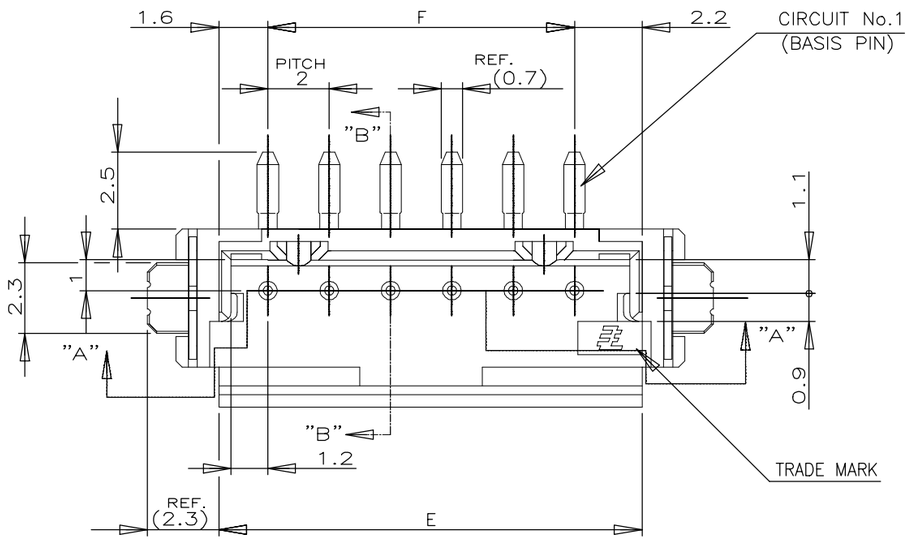

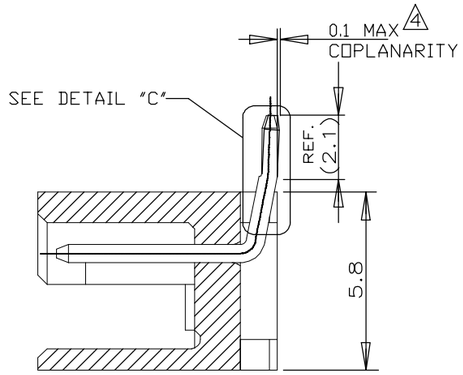

SECT "B"-"B"

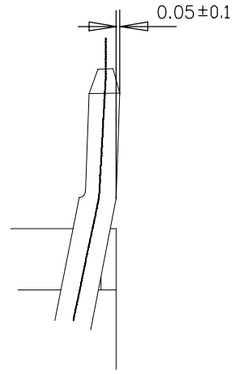

DETAIL "C"
SCALE 10:1

NOTES;

2. MATERIAL:HSG-NYLON (UL94V-0)
   COLOR:NATURAL,BLACK
   POST:TIN BRASS
   TAIL: TIN BRASS
3. OCCUPANT AREA ON PC BOARD
4. TO BE MEASURED WITH CONNECTOR PLACED ON HORIZONTAL DATUM SURFACE,FLOAT OF SOLDER TINE AND TAIL FROM DATUM SURFACE IS 0.1mm MAX
5. PARTS SHALL BE USED AS SOON AS POSSIBLE AFTER OPENING
6. IF STORAGE AFTER OPENING IS REQUIRED, PARTS SHALL BE KEPT IN A HUMIDITY-CONTROLLED ENVIRONMENT (E.G., DRY CABINET OR MOISTURE BARRIER BAG)

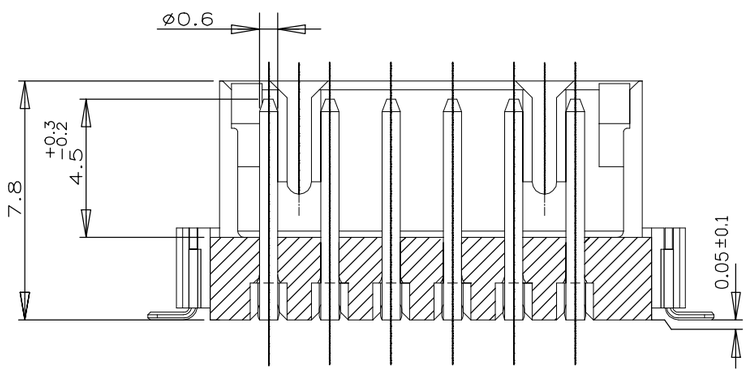

SECT "A"-"A"

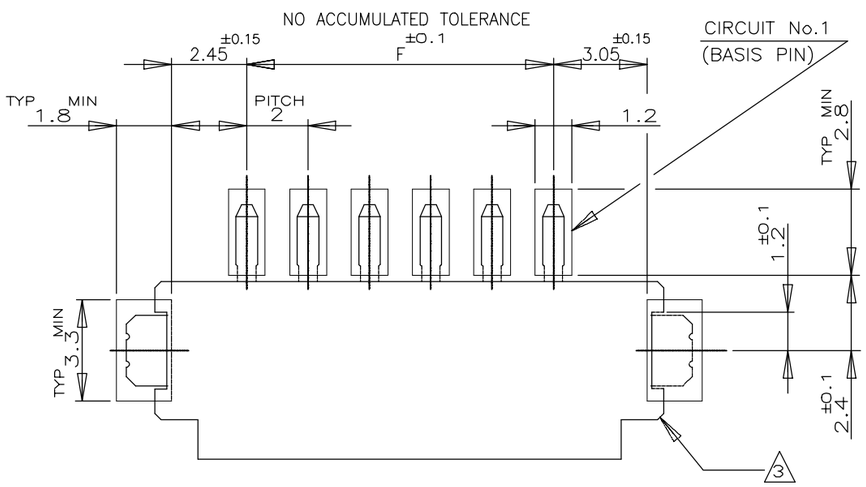

RECOMENOED P.C.BOARD LAYOUT
(P.C.B THK:0.8mm MIN)

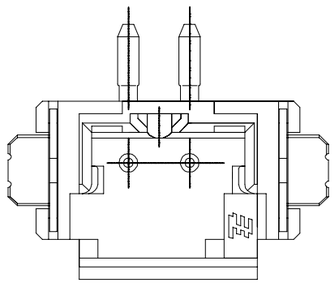

2 P

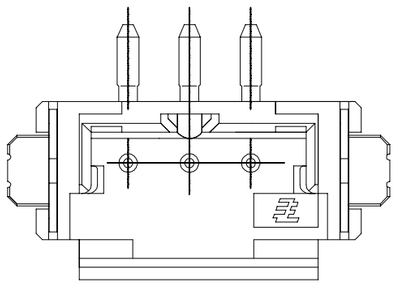

3 P

F	E	POS.	BLACK	NATURAL
			P/N	
16.0	19.8	9	2-292175-9	292175-9
14.0	17.8	8	2- -8	-8
12.0	15.8	7	2- -7	-7
10.0	13.8	6	2- -6	-6
8.0	11.8	5	2- -5	-5
6.0	9.8	4	2- -4	-4
4.0	7.8	3	2- -3	-3
2.0	5.8	2	2-292175-2	292175-2

THIS DRAWING IS A CONTROLLED DOCUMENT.

DIMENSIONS: mm

TOLERANCES UNLESS OTHERWISE SPECIFIED:
0 PLC ± –
1 PLC ± –
2 PLC ± –
3 PLC ± –
4 PLC ± –
ANGLES ± –

MATERIAL: SEE NOTE

FINISH: SEE NOTE

TOLERANCES UNLESS OTHERWISE SPECIFIED:
10≥* : ±0.2
30≥*>10 : ±0.25
100≥*>30 : ±0.3
ANGEL : ±3°

DWN –
CHK –
APVD –
PRODUCT SPEC 108-60016
APPLICATION SPEC –
WEIGHT 0

CUSTOMER DRAWING

TE Connectivity Ltd.

NAME
ON TAPING (EMBOSS)
SMT TYPE POST HDR ASS'Y(V)
W/O BOSS &WITH TAIL TYPE

SIZE	CAGE CODE	DRAWING NO	RESTRICTED TO
A3	00779	C-292175	–

SCALE	SHEET	REV
N/A	3 OF 3	B6