© 2026 TE Connectivity. All Rights Reserved.

REVISIONS					
P	LTR	DESCRIPTION	DATE	DWN	APVD
	D4	PART STATUS CHANGE TO DISCONTINUNACE	15JUL2026	NS	PS

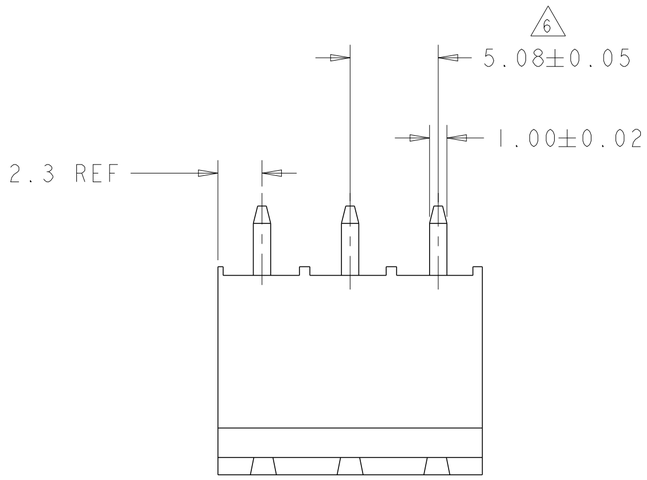

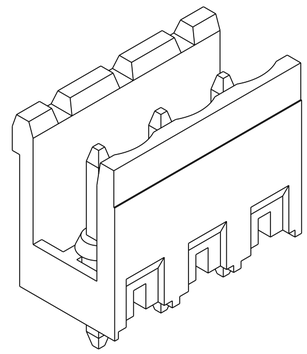

282825-3 AS SHOWN

1. MATERIALS AND FINISH}
   HOUSING: PA 6-6, UL 94-V0, COLOR GREEN.
   TERMINAL: COPPER ALLOY, FINISH: SEE TABLE.
2. SUITABLE FOR 1,6-2,4mm PC BOARD THICKNESS.
3. END-TO-END STACKABLE WITHOUT LOSS OF CENTERLINE SPACING.
4. RECOGNIZED UNDER THE COMPONENT PROGRAM OF UNDERWRITERS LABORATORIES INC. FILE N°E60677.
5. IMQ CERTIFICATE WITH SURVEILLANCE IN CONFORMITY WITH IEC 998-1/998-2-1.
6. NOT CUMULATIVE TOLERANCE.

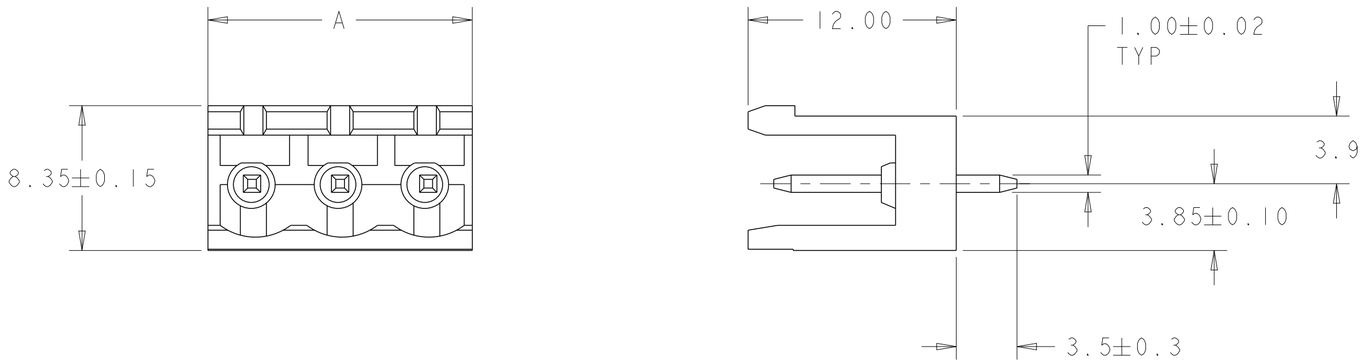

OBSOLETE	.000008 GOLD OVER NICKEL	9.68	2	2-282825-6
OBSOLETE	TIN PLATED	126.52	25	2-282825-5
	TIN PLATED	121.44	24	2-282825-4
OBSOLETE	TIN PLATED	116.36	23	2-282825-3
OBSOLETE	TIN PLATED	111.28	22	2-282825-2
OBSOLETE	TIN PLATED	106.20	21	2-282825-1
OBSOLETE	TIN PLATED	101.12	20	2-282825-0
OBSOLETE	TIN PLATED	96.04	19	1-282825-9
OBSOLETE	TIN PLATED	90.96	18	1-282825-8
OBSOLETE	TIN PLATED	85.88	17	1-282825-7
	TIN PLATED	80.80	16	1-282825-6
OBSOLETE	TIN PLATED	75.72	15	1-282825-5
	TIN PLATED	70.64	14	1-282825-4
OBSOLETE	TIN PLATED	65.56	13	1-282825-3
	TIN PLATED	60.48	12	1-282825-2
	TIN PLATED	55.40	11	1-282825-1
	TIN PLATED	50.32	10	1-282825-0
	TIN PLATED	45.24	9	282825-9
	TIN PLATED	40.16	8	282825-8
	TIN PLATED	35.08	7	282825-7
	TIN PLATED	30.00	6	282825-6
	TIN PLATED	24.92	5	282825-5
	TIN PLATED	19.84	4	282825-4
	TIN PLATED	14.76	3	282825-3
	TIN PLATED	9.68	2	282825-2
	TERMINAL FINISH	A	NO OF POSN	PART NUMBER

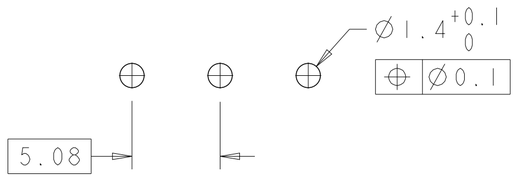

RECOMMENDED PC BOARD LAYOUT

THIS DRAWING IS A CONTROLLED DOCUMENT.

DIMENSIONS: mm

TOLERANCES UNLESS OTHERWISE SPECIFIED:
0 PLC ±-
1 PLC ±.3
2 PLC ±.25
3 PLC ±-
4 PLC ±-
ANGLES ±2

MATERIAL 1

FINISH 1

DWN 30JUL2001 E. ZANOLINI
CHK 30JUL2001 D. BIEVENOUR
APVD 30JUL2001 D. BEIVENOUR
PRODUCT SPEC 108-20166
APPLICATION SPEC 114-20079
WEIGHT -

TE Connectivity

NAME TERMINAL BLOCK HEADER ASSEMBLY 180 DEG OPEN ENDS, STACKING 5.08mm PITCH

SIZE	CAGE CODE	DRAWING NO	RESTRICTED TO
A2	00779	C-282825	-

CUSTOMER DRAWING | SCALE 3:1 | SHEET 1 OF 1 | REV D4

1471-9 (3/13)