© 2019 TE Connectivity. All Rights Reserved. | USED ON: 1563173

REVISIONS					
P	LTR	DESCRIPTION	DATE	DWN	APVD
	A	NEW DRAWING	11NOV2019	VNB	JG

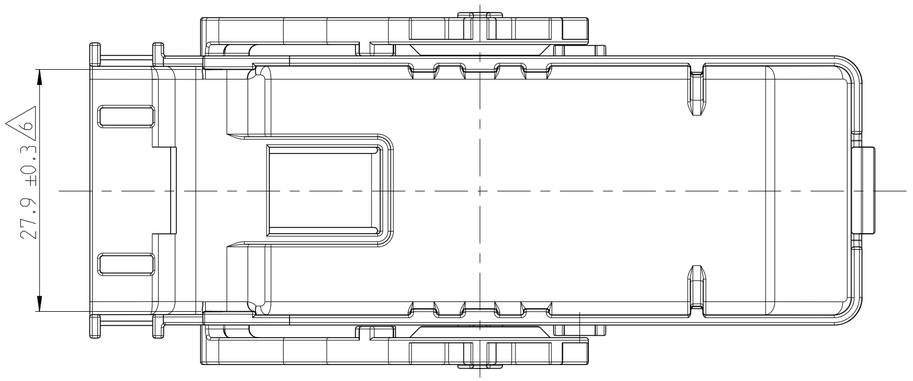

SECTION A-A
schnitt

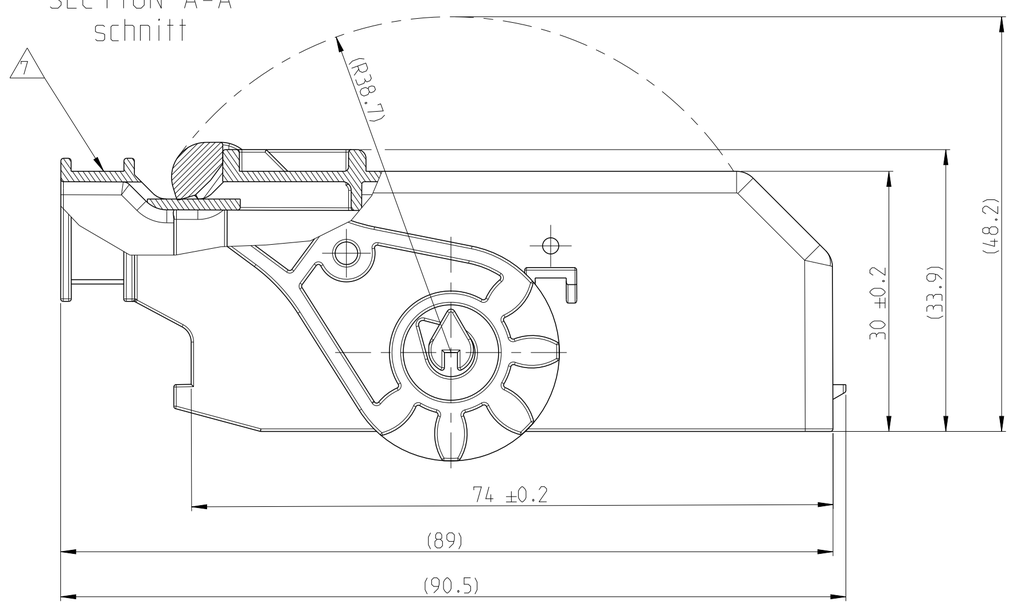

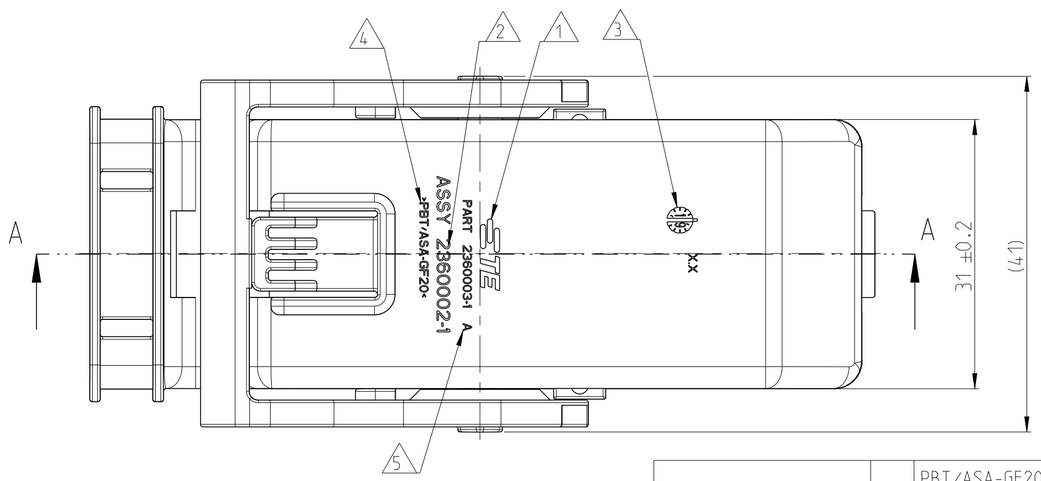

NOTES
Bemerkungen

1. TE CONNECTIVITY (TE) LOGO
   TE Connectivity (TE) Logo
2. TE ORDER NO.
   TE Bestell-Nr.
3. PRODUCTION DATE
   Produktionsdatum
4. MATERIAL MARKING ACCORDING TO VDA 260
   Werkstoffkennzeichnung nach VDA 260
5. LETTER INSERT FOR THE REVISION STATUS OF THE MOULD
   Schriftsatz fuer Aenderungszustand des Werkzeuges
6. WARPAGE UP TO 1MM FROM NOM. DIMENSION PERMITTED
   Verzug zulaessig bis 1mm vom Nennmass
7. MAX. CABLE TIE WIDTH: 5.8mm
   max. Kabelbinderbreite: 5.8mm
8. ASSY DELIVERED WITH LEVER IN ENDLOCKED POSITION
   Anlieferungszustand: Hebel in Endraststellung
9. SUITABLE FOR PN 1563173
   Passend zu PN 1563173

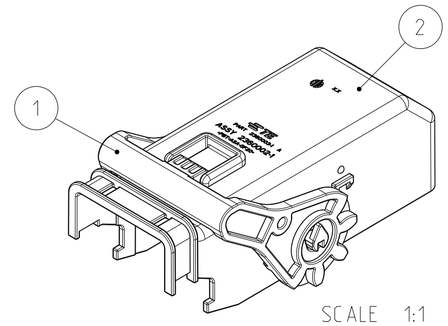

SCALE 1:1
Maßstab

DIMENSIONING AND TOLERANCING ACC. TO:
Bemaßungen und Toleranzen gemaeß:

DIN EN ISO 8015 (AD) - DIN EN ISO 291
DIN EN ISO 14405

TE PART-NO. TE Bestell-Nr.	REV	MATERIAL	DESCRIPTION Beschreibung	COLOUR farbe	ITEM
2360002-1	A	PBT/ASA-GF20	96 POS. CON. COVER 96 Pos. Conn. Kappe	BLACK Schwarz	2
		PBT-GF20	96 POS. CON. LEVER 96 Pos. Conn. Hebel	RED Rot	1

THIS DRAWING IS A CONTROLLED DOCUMENT.
DIMENSIONING AND TOLERANCING PER GPS (ISO STANDARDS).

DIMENSIONS: mm

TOLERANCES UNLESS OTHERWISE SPECIFIED:
0 PLC ±
1 PLC ±
2 PLC ±
3 PLC ±
4 PLC ±
ANGLES ±1°

MATERIAL: SEE TABLE siehe Tabelle
FINISH: SEE TABLE siehe Tabelle

DWN VIJETH BHARADWAJ 11NOV2019
CHK J. GRANZOW 12NOV2019
APVD F. ELTROP 12NOV2019
PRODUCT SPEC -
APPLICATION SPEC -
WEIGHT 20.7g
CUSTOMER DRAWING

TE Connectivity

NAME: 96 POS. COVER
96 Pos. Kappe

SIZE	CAGE CODE	DRAWING NO	RESTRICTED TO
A2	00779	C-2360002	-

SCALE 2:1 | SHEET 1 OF 1 | REV A