© – TE Connectivity. All Rights Reserved.

| REVISIONS | | | | | |
|---|---|---|---|---|---|
| P | LTR | DESCRIPTION | DATE | DWN | APVD |
| | V | REVISED PER ECR-26-286663 | 29JUL2026 | GSK | CAS |

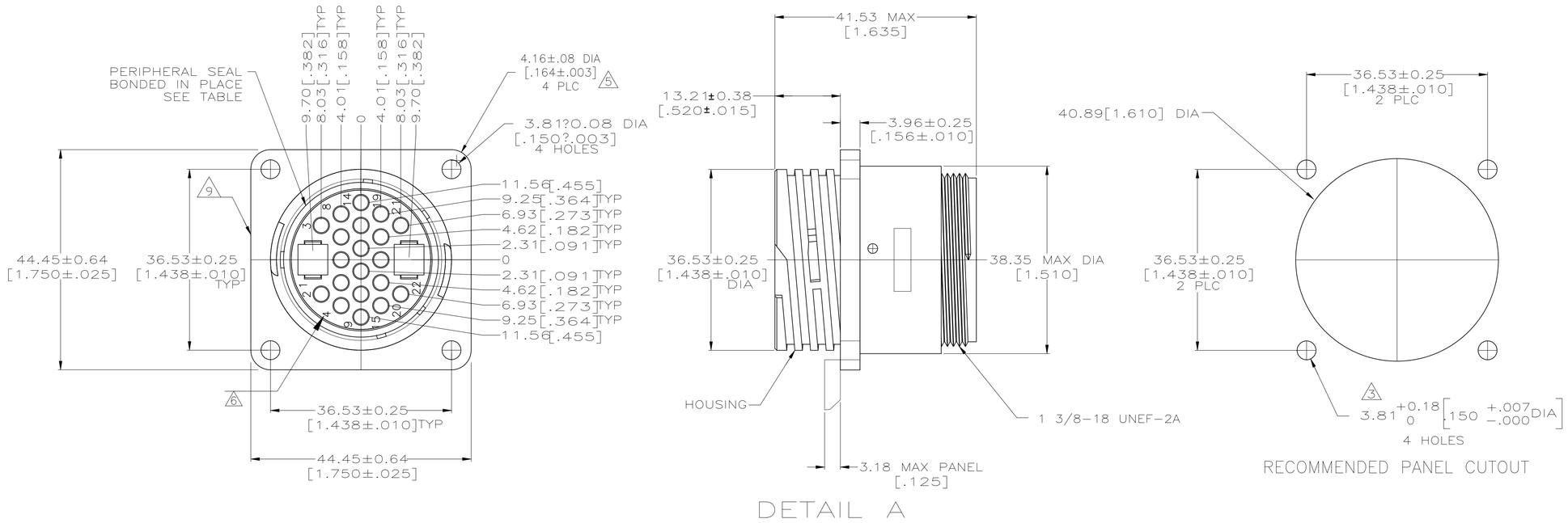


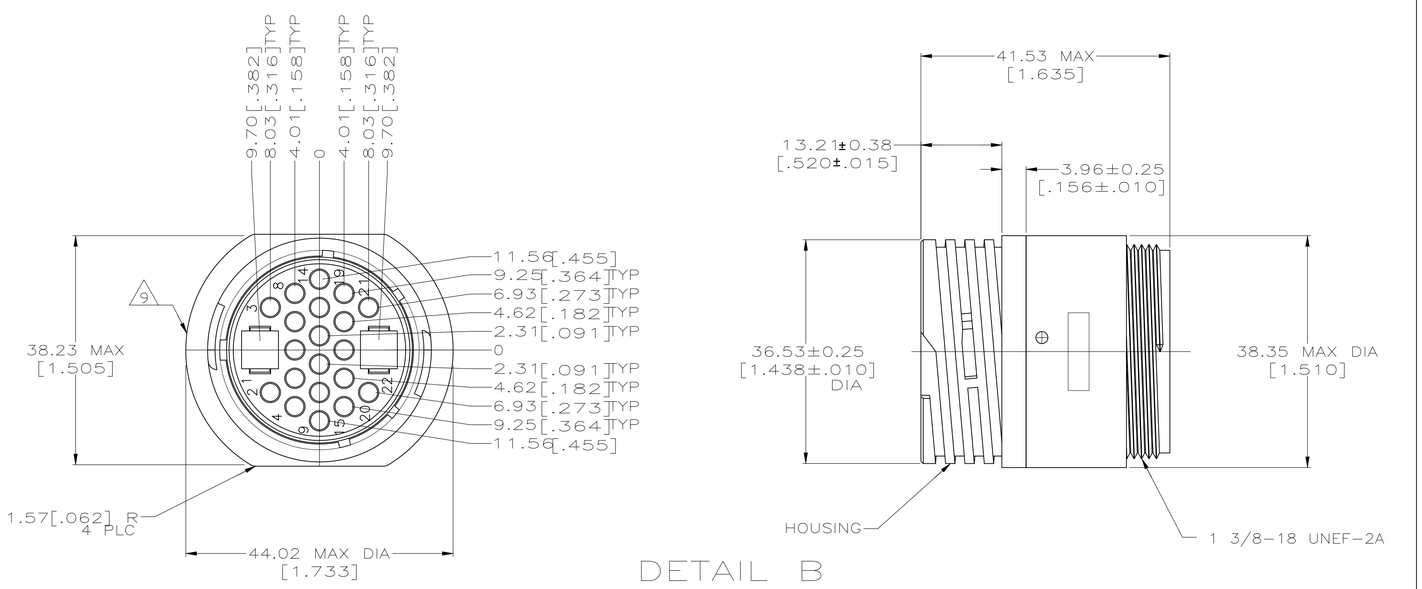


1. WILL ACCEPT (20) MULTIMATE AND 2 TYPE XII PIN CONTACTS.
2. CAVITY IDENTIFICATION ON FRONT AND REAR FACE.
3. NUMBER 4 FASTENERS RECOMMENDED FOR MOUNTING.
4. HOUSING: THERMOPLASTIC, BLACK.
   PERIPHERAL SEAL: ELASTOMER, BLACK.
5. APPLIES TO 206613-6 ONLY.
6. PERMANENT WHITE MARKED OR WHITE INK STAMPED CAVITY INDENTIFICATION.
7. HOUSING: THERMOPLASTIC, BLACK.
   PERIPHERAL SEAL: ELASTOMER, BLACK.
8. WHITE DOT NEAR POSITION 1 ON WIRE ENTRY FACE.
9. TE LOGO AND PART NUMBER LOCATED ON ANY FLANGE EDGE

| NOTES | MOUNTING FEATURE | PERIPHERAL SEAL | SEE DETAIL | PART NUMBER |
|---|---|---|---|---|
| OBSOLETE | 8 4 ø3.81±0.08(.125±.003) HOLES | YES | A | 1-206613-2 |
| | 4 #4-40 THREADED INSERTS | NO | A | 1-206613-0 |
| OBSOLETE | 7 ø3.81±0.08(.125±.003) HOLES | YES | A | 206613-9 |
| PRELIMINARY | 6 4 ø3.81±0.08(.125±.003) HOLES | YES | A | 206613-7 |
| OBSOLETE | 4 #4-40 THREADED INSERTS | NO | A | 206613-6 |
| | 4 ø3.81±0.08(.125±.003) HOLES | YES | A | 206613-5 |
| | 4 ø3.81±0.08(.125±.003) HOLES | NO | B | 206613-3 |
| | 4 ø3.81±0.08(.125±.003) HOLES | NO | A | 206613-1 |

THIS DRAWING IS A CONTROLLED DOCUMENT.

DIMENSIONS: INCHES

TOLERANCES UNLESS OTHERWISE SPECIFIED:
0 PLC ± –
1 PLC ± –
2 PLC ± 0.13 [.005]
3 PLC ± –
4 PLC ± –
ANGLES ± –

MATERIAL – 4 7
FINISH –

DWN M.BINNER 05/26/94
CHK R.STONE 6-23-94
APVD –
PRODUCT SPEC 108-10024
APPLICATION SPEC –
WEIGHT

TE Connectivity

NAME RECEPTACLE HOUSING, STANDARD SEX, SHELL SIZE 23, CPC –

| SIZE | CAGE CODE | DRAWING NO | RESTRICTED TO |
|---|---|---|---|
| A1 | 00779 | C-206613 | – |

CUSTOMER DRAWING | SCALE 2:1 | SHEET 1 OF 1 | REV V

4805 (1/15)