© – TE Connectivity. All Rights Reserved.

REVISIONS					
P	LTR	DESCRIPTION	DATE	DWN	APVD
	P	REVISED PER ECR-26-286663	29JUL2026	GSK	CAS

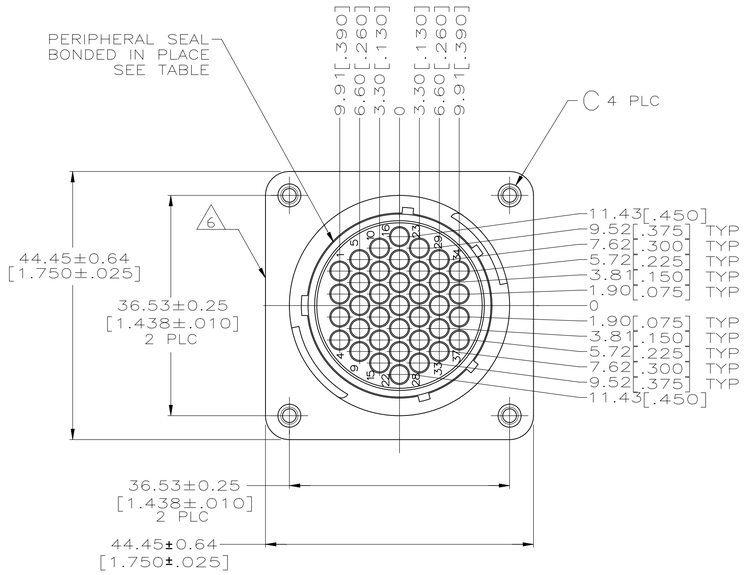

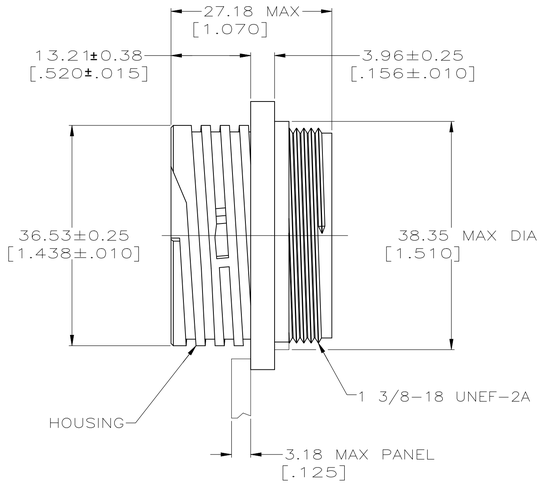

DETAIL A

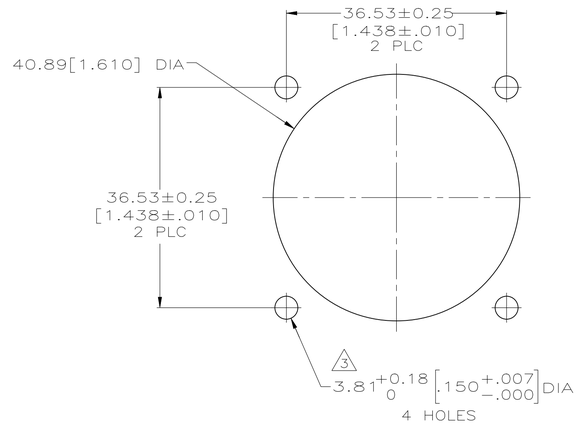

RECOMMENDED PANEL CUTOUT

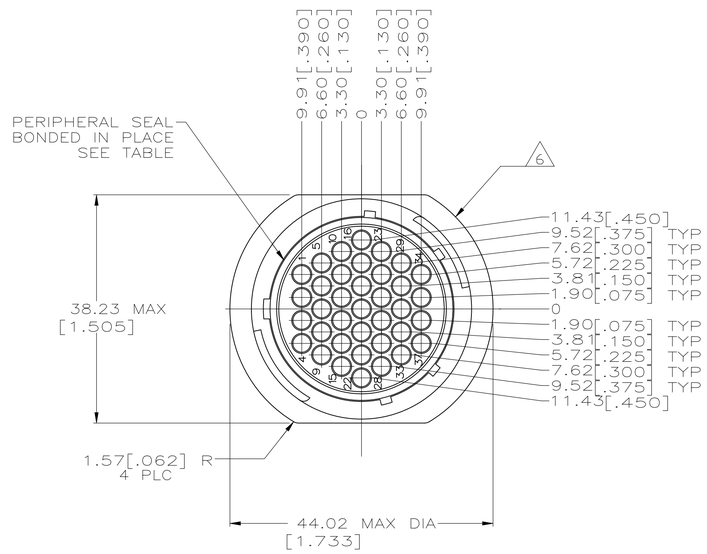

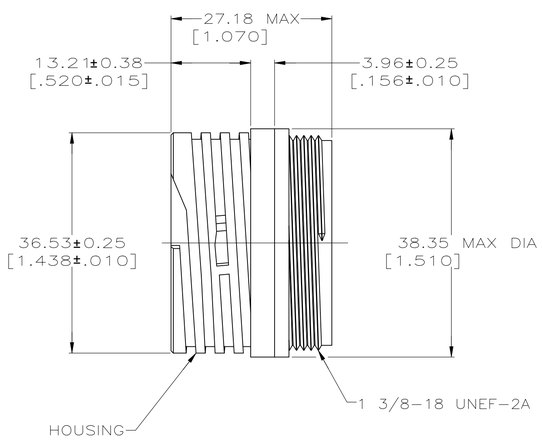

DETAIL B

OBSOLETE 5	STANDARD	NO	3.81[.150] DIA HOLE	A	4 ~~206306-8~~
	SMALL PACK	NO	3.81[.150] DIA HOLE	A	~~206306-6~~
	STANDARD	NO	4-40 THREADED INSERT	A	206306-5
	STANDARD	YES	–	B	206306-4
	STANDARD	YES	3.81[.150] DIA HOLE	A	206306-3
	STANDARD	NO	–	B	206306-2
	STANDARD	NO	3.81[.150] DIA HOLE	A	206306-1
	PACKAGING	PERIPHERAL SEAL	C	SEE DETAIL	PART NUMBER

1 CAVITY IDENTIFICATION ON FRONT AND REAR FACE.

2 WILL ACCEPT THIRTY-SEVEN (37) MULTIMATE SOCKET CONTACTS.

3 NO 4 FASTENER RECOMMENDED FOR MOUNTING.

4 THERMOPLASTIC, BLACK.

5 OBSOLETE PARTS: OBSOLETE CIS STREAMLINING PER D.RENAUD/D.SINISI

6 TE LOGO AND PART NUMBER LOCATED ON ANY FLANGE EDGE

THIS DRAWING IS A CONTROLLED DOCUMENT.

DIMENSIONS: mm [INCHES]

TOLERANCES UNLESS OTHERWISE SPECIFIED:
0 PLC ± –
1 PLC ± –
2 PLC ± 0.13 [.005]
3 PLC ± –
4 PLC ± –
ANGLES ± –

MATERIAL: HOUSING: THERMOPLASTIC, BLACK; INSERT: BRASS

FINISH: –

DWN D.GELTZ 07/26/93
CHK R.STONE 08/11/93
APVD A.FRANTIUM 08/13/93

PRODUCT SPEC: 108-10024
APPLICATION SPEC: –
WEIGHT: –

TE Connectivity

NAME: RECEPTACLE HOUSING, REVERSE SEX, SHELL SIZE 23, CPC –

SIZE	CAGE CODE	DRAWING NO	RESTRICTED TO
A1	00779	C-206306	–

CUSTOMER DRAWING | SCALE 2:1 | SHEET 1 OF 1 | REV P

4805 (1/15)