© 2026TE Connectivity. All Rights Reserved.

REVISIONS					
P	LTR	DESCRIPTION	DATE	DWN	APVD
	D	ECR-11-015005	19/07/11	JB	-
	D1	DIM UPDATE	07MAY2026	LS	MB

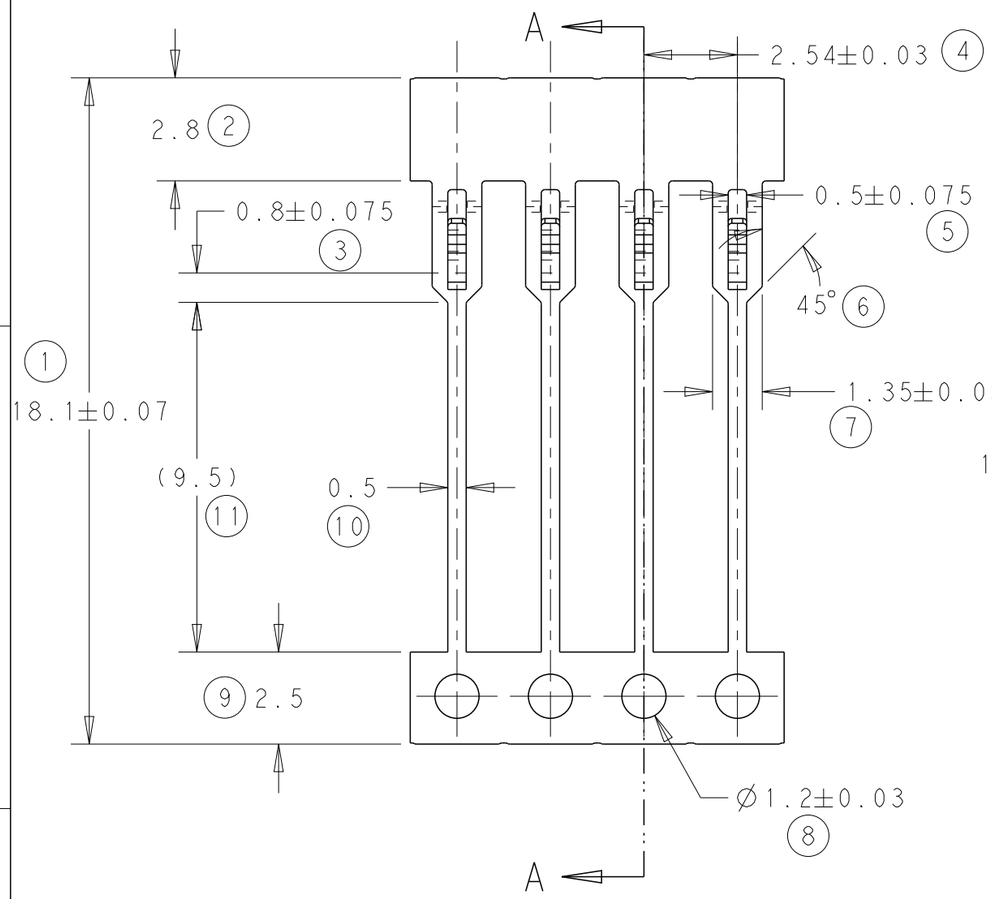

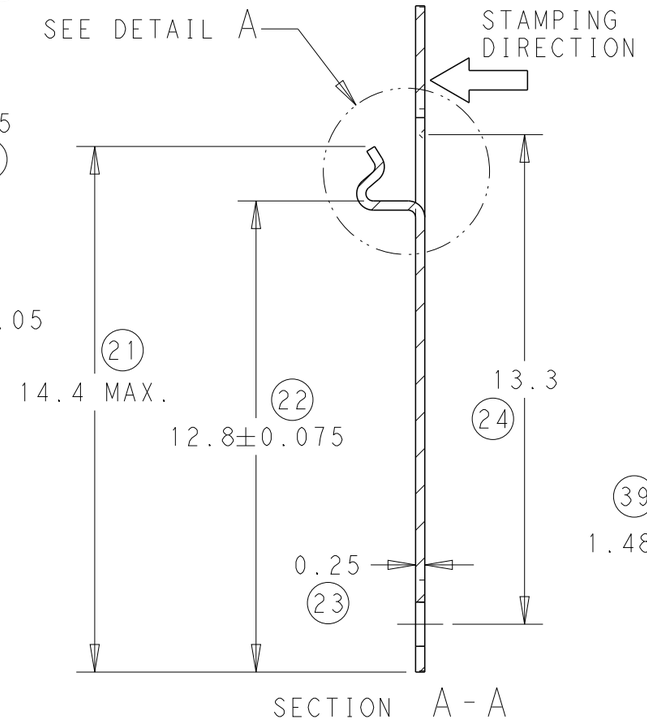

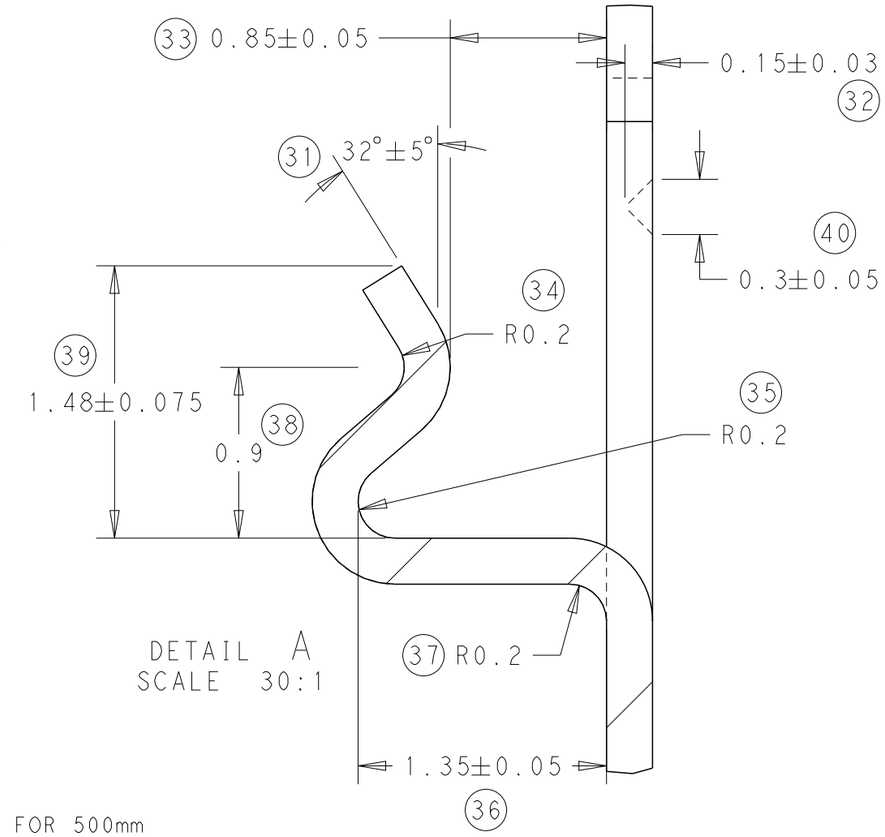

DETAIL A
SCALE 30:1

NOTES:
1 BOWING: AFTER UPPER TIE BAR REMOVAL- 1.5mm MAX. FOR 500mm

2 PITCH : AFTER UPPER TIE BAR REMOVAL- 2.54±0.127

△3 OBSOLETE

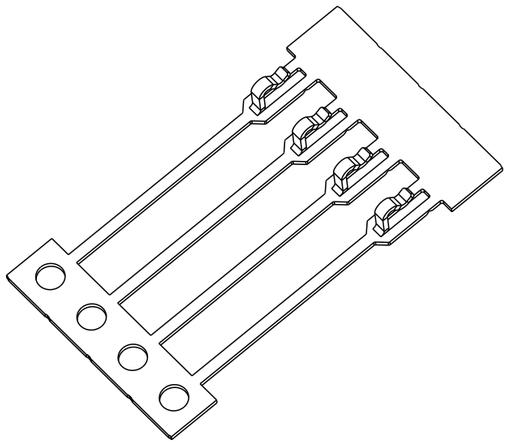

SCALE 4:1

△3	0	Ni & Sn	1544242-2
	0	Sn	1544242-1
	REELING	FINISH	PART NUMBER

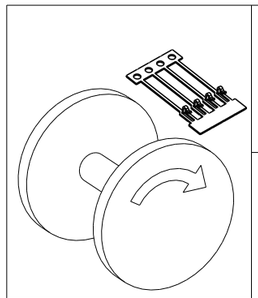

DIRECTION "0"
CONTACTS DOWN

DIRECTION "1"
CONTACTS UPWARDS

DIRECTION OF TOP OF REEL | DIRECTION

THIS DRAWING IS A CONTROLLED DOCUMENT.

DIMENSIONS: mm

TOLERANCES UNLESS OTHERWISE SPECIFIED:
0 PLC ±-
1 PLC ±-
2 PLC ±0.05
3 PLC ±-
4 PLC ±-
ANGLES ±0.5

MATERIAL CuSn6

FINISH -

DWN J.BRIGHT 15/07/11
CHK M.GREENER 15/07/11
APVD D.PENNINGTON 15/07/11
PRODUCT SPEC -
APPLICATION SPEC -
WEIGHT -

TE Connectivity

NAME SIL CONTACT
-
-

SIZE	CAGE CODE	DRAWING NO	RESTRICTED TO
A3	00779	C-1544242	-

CUSTOMER DRAWING | SCALE 6:1 | SHEET 1 OF 1 | REV D1

1470-19 (3/13)