© 2020 TE Connectivity. All Rights Reserved.

REVISIONS					
P	LTR	DESCRIPTION	DATE	DWN	APVD
	B3	REVISED PER ECO-14-014610	26SEP2014	DLD	SLM
	B4	REVISED PER ECO-15-014533	08OCT2015	DLD	SLM
	B5	REVISED PER ECO-20-004909	22APR2020	JMS	SI
	B6	REV PER ECO-21-001060	26FEB2021	RGV	SI

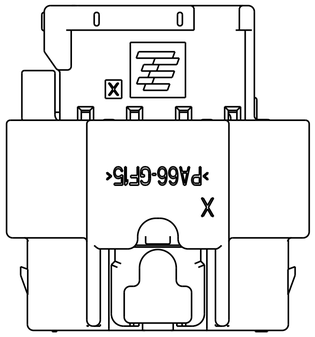

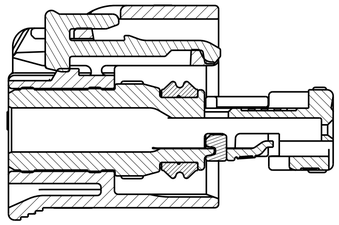

SECTION B-B
SHOWN WITH CPA (WHEN APPLICABLE)
IN IT'S LATCHED POSITION
FOR REFERENCE ONLY

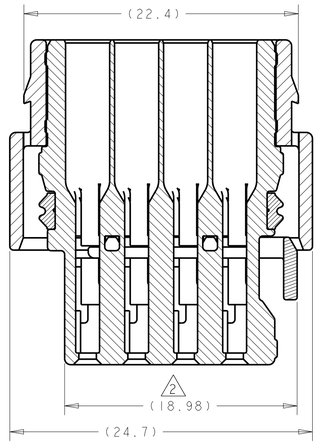

SECTION A-A

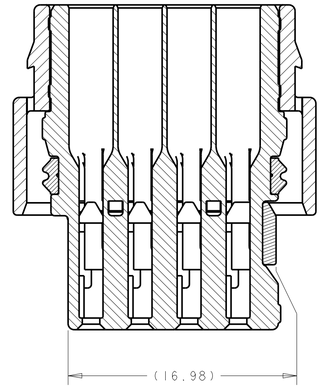

SECTION A-A
SHOWN WITH TPA
IN IT'S LATCHED POSITION
FOR REFERENCE ONLY

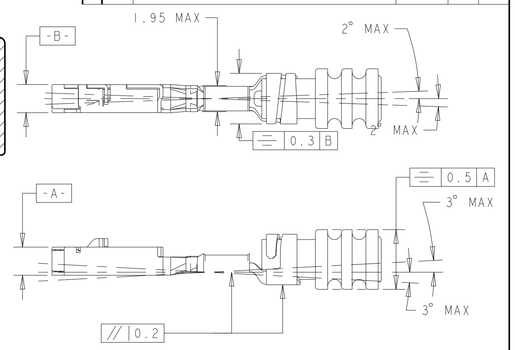

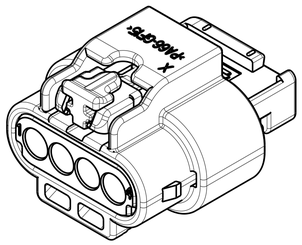

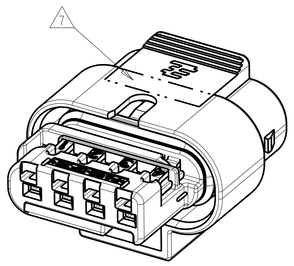

ISOMETRIC VIEWS
SCALE 3:1

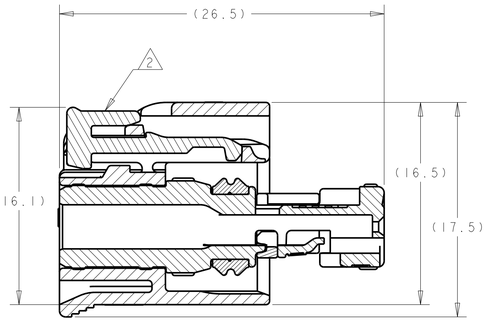

SECTION B-B

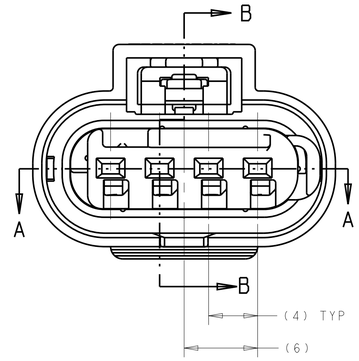

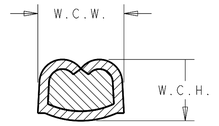

WIRE CRIMP
DIMENSIONS

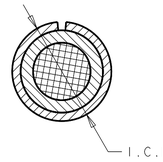

INSULATION CRIMP
DIMENSIONS

MAX TEMP	FEMALE TERMINAL PN	TERMINAL PLATING	AWG	APPLICABLE WIRE FINISHED O.D.	W.C.H.	W.C.W.	I.C.D.	WIRE SEAL PART NUMBER
125C	1670146-1	TIN	20	1.40 - 1.90mm	0.84 ±0.03	1.57 ±0.05	3.25 ±0.05	967067-1
125C	1670146-2	GOLD	20	1.40 - 1.90mm	0.84 ±0.03	1.57 ±0.05	3.25 ±0.05	967067-1
125C	1670146-3	SILVER	20	1.40 - 1.90mm	0.84 ±0.03	1.57 ±0.05	3.25 ±0.05	967067-1
125C	1418850-1	TIN	18	1.90 - 2.40mm	1.11 ±0.05	1.78 ±0.05	3.35 ±0.05	964972-1
125C	1418850-1	TIN	16	1.90 - 2.40mm	1.31 ±0.05	1.78 ±0.05	3.35 ±0.05	964972-1
125C	1418850-2	GOLD	18	1.90 - 2.40mm	1.11 ±0.05	1.78 ±0.05	3.35 ±0.05	964972-1
125C	1418850-2	GOLD	16	1.90 - 2.40mm	1.31 ±0.05	1.78 ±0.05	3.35 ±0.05	964972-1
125C	1418850-3	SILVER	18	1.90 - 2.40mm	1.11 ±0.05	1.78 ±0.05	3.35 ±0.05	964972-1
125C	1418850-3	SILVER	16	1.90 - 2.40mm	1.31 ±0.05	1.78 ±0.05	3.35 ±0.05	964972-1
150C	1670146-2	GOLD	20	1.40 - 1.90mm	0.84 ±0.03	1.57 ±0.05	18	2098582-1
150C	1670146-3	SILVER	20	1.40 - 1.90mm	0.84 ±0.03	1.57 ±0.05		2098582-1
150C	1418850-2	GOLD	18	1.40 - 1.90mm	1.11 ±0.05	1.78 ±0.05		2098582-1
150C	1418850-2	GOLD	16	1.40 - 1.90mm	1.31 ±0.05	1.78 ±0.05		2098582-1
150C	1418850-3	SILVER	18	1.40 - 1.90mm	1.11 ±0.05	1.78 ±0.05		2098582-1
150C	1418850-3	SILVER	16	1.40 - 1.90mm	1.31 ±0.05	1.78 ±0.05		2098582-1

KEYING CONFIGURATIONS

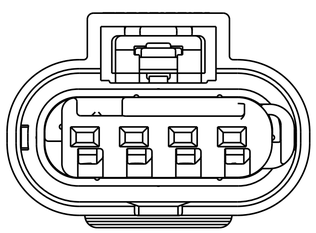

KEYING OPTION A

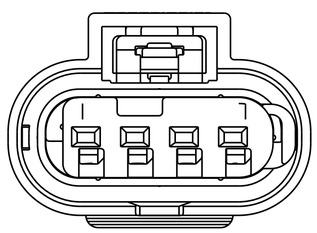

KEYING OPTION B

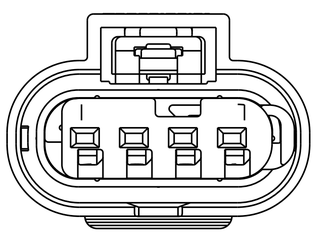

KEYING OPTION C

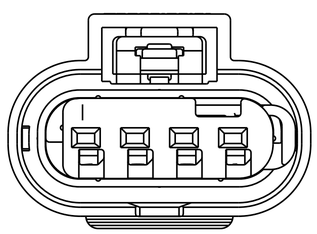

KEYING OPTION D

1. PART NUMBER 1-1456426-5 SHOWN ON DRAWING.

2. TPA AND CPA (WHEN APPLICABLE) ARE SHIPPED IN THEIR PRE-LATCHED POSITIONS. SEE INSTRUCTION SHEET 408-8968 FOR DIRECTIONS ON MOVING THE CPA AND TPA TO THE PRE-LATCHED POSITION, IF NECESSARY.

3. TERMINALS SOLD SEPARATELY. FOR USE WITH TE MCON 1.2mm CLEAN BODY CONTACT WITH WIRE SEAL. SEE TE MCON 1.2-CB (CLEAN BODY) TABLE FOR APPLICABLE PART NUMBERS.

4. APPLICABLE HEADER INTERFACE DRAWING 114-18679-3 IS AVAILABLE UPON REQUEST. A COPY OF THIS DRAWING CAN BE OBTAINED FROM THE TE CONNECTIVITY PRODUCT MANAGER, VIA YOUR TE CONNECTIVITY SALES REPRESENTIVE OR CUSTOMER SERVICE.

5. MINIMUM FEED THROUGH CONDITION WITH 1.0mm CLEARANCE ALL AROUND.

6. NOTE LEFT BLANK INTENTIONALLY

7. TRACEABILITY CODE (YY = TWO DIGIT YEAR, JJJ = 3 DIGIT JULIAN DAY, S = 1 DIGIT SHIFT) AND TE ASSEMBLY PART NUMBER PRINTED IN THIS LOCATION AT ASSEMBLY.

8. FOR OPTIONAL TERMINAL CAVITY BLOCKING, USE TE CONNECTIVITY BLIND PLUG PART NUMBER 967056-1 FOR 125°C MAX TEMPERATURE.

9. PROTOTYPE CONFIGURATION NOT SHOWN.

10. PROTOTYPE ASSEMBLIES USE GERMAN OUTER HOUSING P/N: 1718657-1, CPA P/N: 1670193-1 AND SEAL P/N: 1718659-1.

11. TPA ENGAGE FORCE: PRESET TO FULL >= 2 N AND <= 60 N.

12. TPA DISENGAGE FORCE: DISENGAGE FROM FULL TO PRESET >= 2 N AND <= 60 N

13. CPA ENGAGE FORCE: PRESET TO FULL WITHOUT CONECTORS MATED >= 40 N.

14. CPA ENGAGE FORCE: PRESET TO FULL WITH CONNECTORS MATED <30 N.

15. POLARIZATION FEATURE EFFECTIVENESS:
    CONNECTOR MATED TURNED 180° NO MATING > 125 N.
    WRONG KEYING NO MATING > 125 N.

16. VALIDATED UP TO:
    USCAR-2 TEMPERATURE CLASS IV (150°C) WHEN USED AS A DIRECT CONNECT.
    USCAR-2 TEMPERATURE CLASS III (125°C) WHEN USED AS AN INLINE APPLICATION.

17. SEE INSTRUCTION SHEET 408-8928.

18. ICD IS DEPENDENT UPON WIRE INSULATION TYPE AND OD. MUST BE SUFFICIENT TO GRIP SEAL SO IT DOES NOT SLIDE OUT OF INSULATION CRIMP WHEN INSERTING INTO CONNECTOR CAVITY BUT NOT TEAR THE SEAL.

19. REFERENCE ISOMETRIC VIEWS ON SHEET 2.

STATUS	CPA 19	COLOR	KEY	PART NUMBER
		INNER HOUSING		
RELEASED	2138907-1	GRAY	D	4-1456426-4
RELEASED	2138907-1	BLUE	C	4-1456426-3
RELEASED	2138907-1	NATURAL/BROWN	B	4-1456426-2
RELEASED	2138907-1	BLACK	A	4-1456426-1
RELEASED	1488787-1	GRAY	D	1-1456426-8
RELEASED	1488787-1	BLUE	C	1-1456426-7
RELEASED	1488787-1	NATURAL/BROWN	B	1-1456426-6
RELEASED	1488787-1	BLACK	A	1-1456426-5
RELEASED	N/A	GRAY	D	1-1456426-4
RELEASED	N/A	BLUE	C	1-1456426-3
RELEASED	N/A	NATURAL/BROWN	B	1-1456426-2
RELEASED	N/A	BLACK	A	1-1456426-1
OBSOLETE 10				~~1456426-8~~
				~~1456426-7~~
				~~1456426-6~~
				~~1456426-5~~
				~~1456426-4~~
				~~1456426-3~~
				~~1456426-2~~
				~~1456426-1~~

THIS DRAWING IS A CONTROLLED DOCUMENT.

DIMENSIONS: mm

TOLERANCES UNLESS OTHERWISE SPECIFIED:
0 PLC ±-
1 PLC ±0.3
2 PLC ±0.10
3 PLC ±-
4 PLC ±-
ANGLES ±1°

MATERIAL - SEE TABLE

FINISH - -

DWN M. FORISKA 25SEP2006
CHK G. MARTIN 25SEP2006
APVD G. MARTIN 25SEP2006

PRODUCT SPEC -

APPLICATION SPEC -

WEIGHT 4.3gms

CUSTOMER DRAWING

TE Connectivity

NAME CONNECTOR ASSEMBLY, FEMALE, 4 POSITION SEALED, 1.2mm STANDARD LATCH VERSION

SIZE A | CAGE CODE 00779 | DRAWING NO C-1456426 | RESTRICTED TO

SCALE 4:1 | SHEET 1 OF 2 | REV B6

4805 (3/13)

© 2020 TE Connectivity. All Rights Reserved.

REVISIONS					
P	LTR	DESCRIPTION	DATE	DWN	APVD
	-	SEE SHEET 1	-	-	-

ISOMETRIC VIEWS

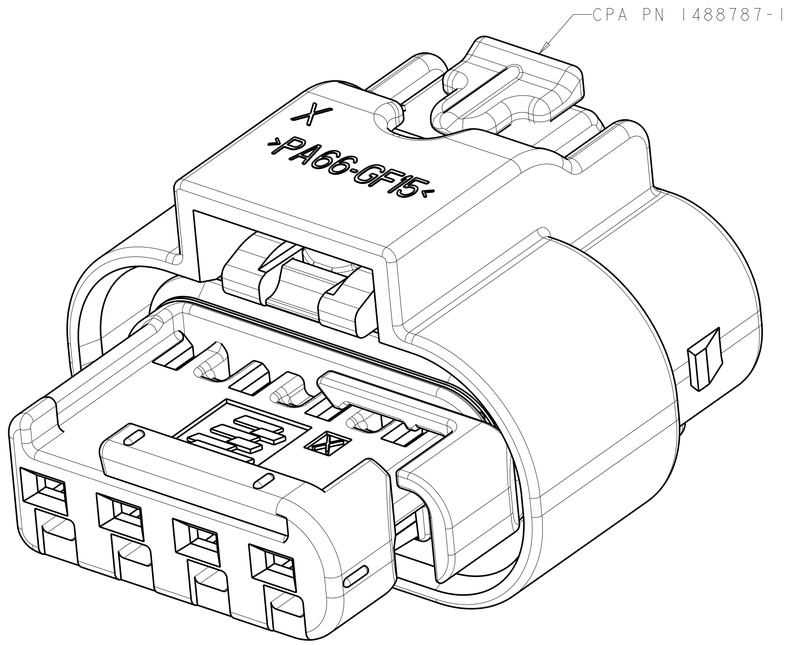

PN 1-1456426-5 SHOWN
SCALE 8:1

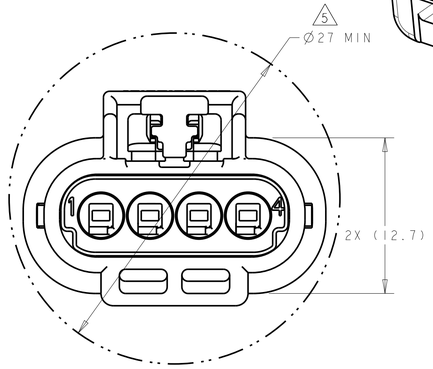

FEED THROUGH CONDITION

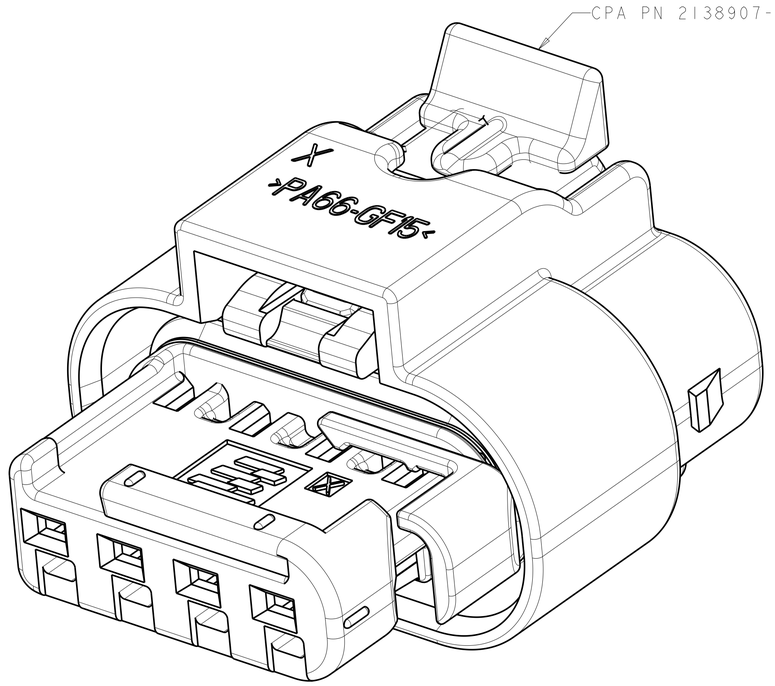

PN 4-1456426-1 SHOWN
SCALE 8:1

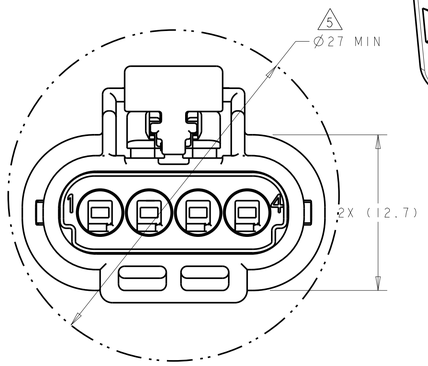

FEED THROUGH CONDITION

THIS DRAWING IS A CONTROLLED DOCUMENT.

DIMENSIONS: mm

TOLERANCES UNLESS OTHERWISE SPECIFIED:
0 PLC ±-
1 PLC ±0.3
2 PLC ±0.10
3 PLC ±-
4 PLC ±-
ANGLES ±1°

MATERIAL - SEE TABLE

FINISH - -

DWN M. FORISKA 25SEP2006
CHK G. MARTIN 25SEP2006
APVD G. MARTIN 25SEP2006

PRODUCT SPEC -

APPLICATION SPEC -

WEIGHT 4.3gms

CUSTOMER DRAWING

TE Connectivity

NAME CONNECTOR ASSEMBLY, FEMALE, 4 POSITION SEALED, 1.2mm STANDARD LATCH VERSION

SIZE	CAGE CODE	DRAWING NO	RESTRICTED TO
A1	00779	C-1456426	

SCALE 4:1 SHEET 2 OF 2 REV B6

4805 (3/13)