THIS DRAWING IS UNPUBLISHED. RELEASED FOR PUBLICATION 20
© COPYRIGHT 20 BY - ALL RIGHTS RESERVED.

ITEM	DESCRIPTION	MATERIAL	OTHERS
1	MALE CONTACT	COPPER ALLOY	GOLD PLATED
2	HOUSING	NYLON	BLACK
3	COUPLING NUT	ZAMAK	NICKEL PLATED
4	OVER-MOLDING	PVC	BLACK
5	SHIELDED SHELL	COPPER ALLOY	NICKEL PLATED
6	CABLE	PVC JACKET	RED
7	LABEL	-	-

REVISIONS

P	LTR	DESCRIPTION	DATE	DWN	APVD
	A	INITIAL RELEASE	29JUL2019	A.Z	C.W
	A1	CLARIFY TYPICAL PNS	22JUN2020	A.Z	C.W
	B	ECR-22-134232	08JUN2025	B.P	C.W

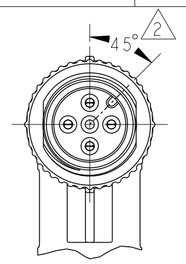

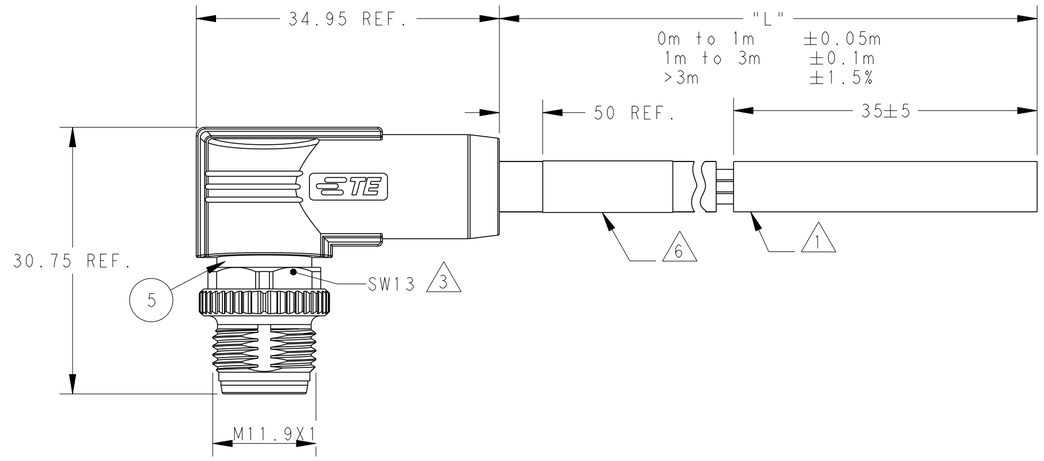

NOTE:
1. STRIP AND RETAIN THE INSULATION
2. CODE POSITION INDICATOR
3. RECOMMENDED TORQUE 0.6 Nm
4. -**:CABLE LENGTH,FOR EXAMPLE:-0.5M
5. CABLE ASSEMBLY TO BE PACKAGED IN POLYBAGS
6. LABEL CONTAINS: PN, DATE CODE...

注释：
1. 剥线并保留护套绝缘层
2. CODE位置指示
3. 推荐扭矩0.6 Nm
4. -**：线缆长度，例如：-0.5M
5. 线缆组件塑料袋包装
6. 标签包含： 产品编号， 日期代码...

TE PN CODING:

T A X X X X X X X X X - X X X

- TE M12 SERIES
- CODE TYPE: A=A CODE
- POLES NO: 4-4 POS
- APPLICATION TYPE: 5=CC-LINK SHIELDED
- WIRE GAUGE: B=20AWG+ 22AWG DRAIN WIRE
- CABLE JACKET COLOR: 4=RED SIMILAR TO RAL3000
- OVERMOLDING: 1=BLACK PVC
- CABLE JACKET: 1=PVC MODERATE FLEXIBLE
- INTERFACE TYPE:
  1=MALE STRAIGHT
  2=MALE ANGLED
  3=FEMALE STRAIGHT
  4=FEMALE ANGLED
  5=MALE STRAIGHT TO FEMALE STRAIGHT
  6=MALE STRAIGHT TO FEMALE ANGLED
  A=MALE ANGLED TO FEMALE STRAIGHT
- OTHER ATTRIBUTES: 1=STANDARD SCREW NUT WITH NICKEL PLATED/ STAMPED TERMINAL 30U"AU PLATING
- TYPICAL LENGTH:
  -001:0.5M
  -002:1.0M
  -020:2.0M
  -040:4.0M
  -060:6.0M
  -080:8.0M
  -007:10.0M
  -150:15.0M
  CUSTOMIZATION RULES:
  -003:1.5M
  -004:3.0M
  -005:5.0M
  -006:7.0M
  -99X:0.XM(<1.0M)
  (-993:0.3M)
  -XXX:XX.XM(>1.0M)
  (-155:15.5M)

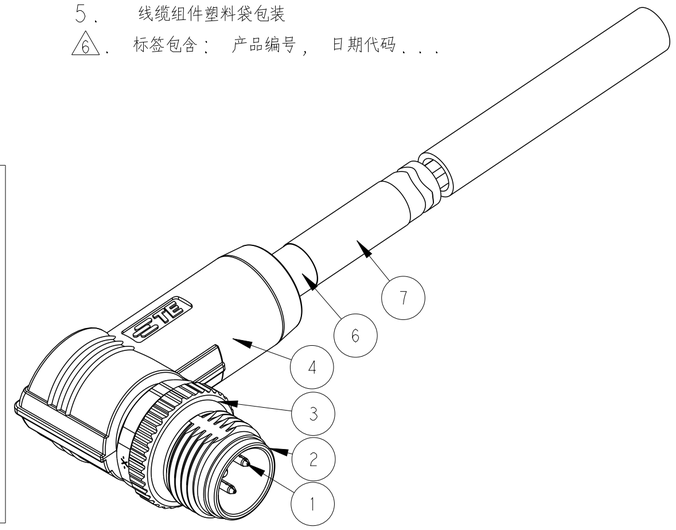

TABLE 1 TECHNICAL DATA	
RATED VOLTAGE	250V
RATED IMPULSE VOLTAGE	2500V
RATED CURRENT	4A
POLLUTION DEGREE	3
OVERVOLTAGE CATEGORY	II
MATERIAL GROUP	II
DEGREE OF PROTECTION	IP67

CABLE CHARACTERISTIC	LENGTH "L"	JACKET COLOR	JACKET MATERIAL	TYPE	POS.	TE PN
WIRES:3X20AWG+1X22AWG DRAIN WIRE WIRE COLOR: BLUE/YELLOW/WHITE OD: APPROX.7.7MM TEMPERATURE RATING:75°C UL OPERATING TEMP RATING: -30°C To +60°C	TYPICAL LENGTH: -001:0.5M -002:1.0M -020:2.0M -040:4.0M -060:6.0M -080:8.0M -007:10.0M -150:15.0M CUSTOMIZATION RULES: -003:1.5M -004:3.0M -005:5.0M -006:7.0M -99X:0.XM(<1.0M) (-993:0.3M) -XXX:XX.XM(>1.0M) (-155:15.5M)	RED	PVC	M12A4-MR-PVC-** 4	4	TAA542B1411-XXX

PIN ARRANGEMENT
A-CODE

PIN 1 DRAIN BARE
PIN 2 DB WHITE
PIN 3 DG YELLOW
PIN 4 DA BLUE

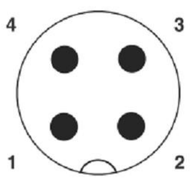

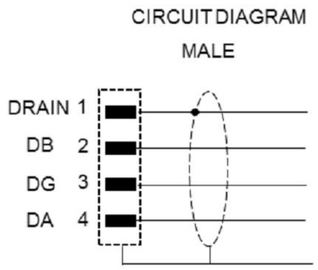

THIS DRAWING IS A CONTROLLED DOCUMENT.

DIMENSIONS: mm

TOLERANCES UNLESS OTHERWISE SPECIFIED:
0 PLC ±-
1 PLC ±-
2 PLC ±-
3 PLC ±-
4 PLC ±-
ANGLES ±2

MATERIAL - -
FINISH - -

DWN ALEX ZHANG 11APR2019
CHK HART HE 11APR2019
APVD CHRIS WANG 11APR2019
PRODUCT SPEC 108-106140
APPLICATION SPEC 114-137144
WEIGHT -

TE Connectivity

NAME M12 A CODE CABLE ASSY,SHIELDED 4P,MR FREE END

SIZE A2 | CAGE CODE - | DRAWING NO C-TAA542B1411XXX | RESTRICTED TO -

CUSTOMER DRAWING | SCALE 2:1 | SHEET 1 OF 1 | REV B

1471-9 (3/13)