© 2026 TE Connectivity. All Rights Reserved.

REVISIONS					
P	LTR	DESCRIPTION	DATE	DWN	APVD
	E6	PART STATUS CHANGE TO DISCONTINUNACE	13JUL2026	NS	PS

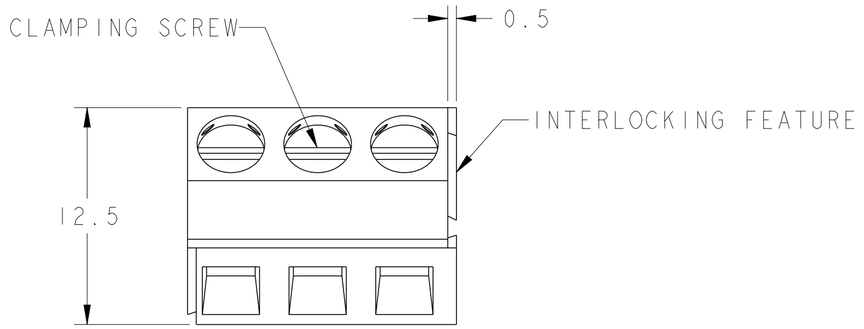

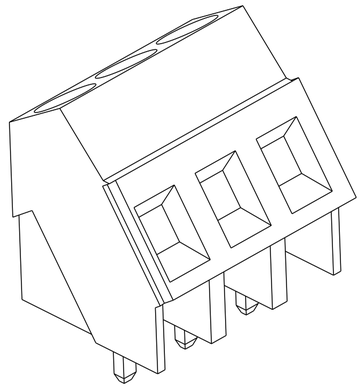

796690-3 AS SHOWN

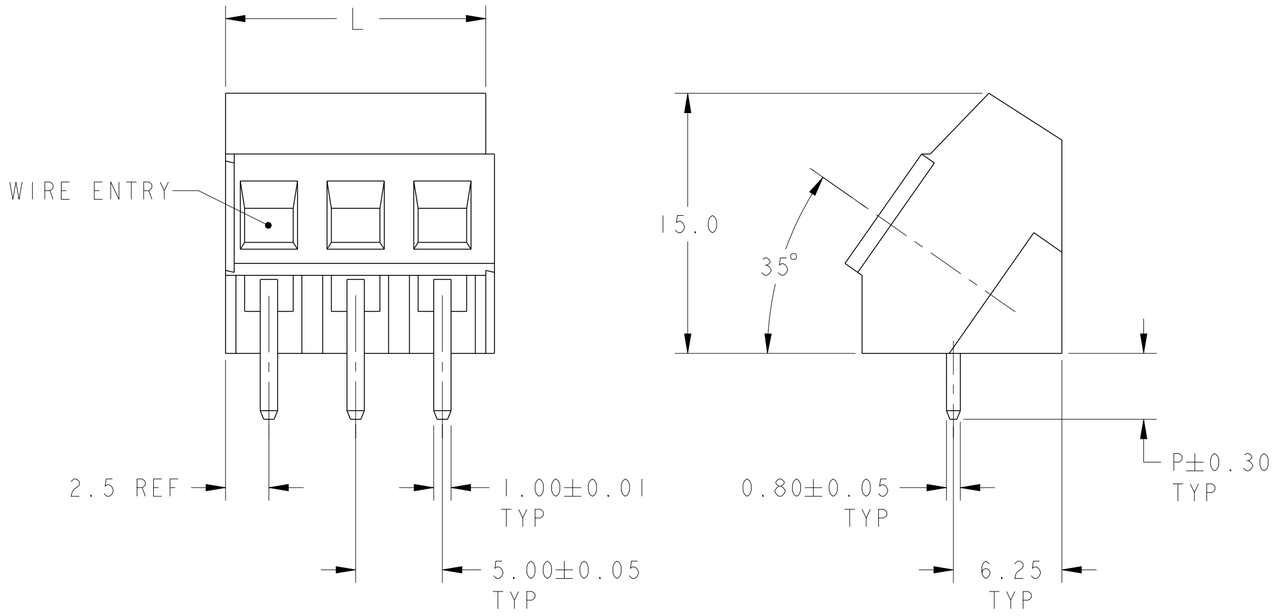

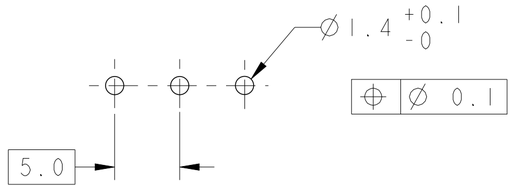

RECOMMENDED PC BOARD LAYOUT

	INK COLOR	MARKING	P	L	NO OF POSN	PART NUMBER
	8	SEE DETAIL K	3.8	40	8	4-796690-8
	BLACK	SEE DETAIL J	3.8	10	2	5-796690-6
	BLACK	SEE DETAIL H	3.8	10	2	5-796690-5
	BLACK	SEE DETAIL G	3.8	10	2	5-796690-4
OBSOLETE	-	-	6.0	15	3	5-796690-3
OBSOLETE	-	-		10	2	5-796690-2
OBSOLETE	9	SEE DETAIL B	3.8	10	2	4-796690-2
OBSOLETE	8	SEE DETAIL F		40	8	3-796690-8
OBSOLETE	9	SEE DETAIL C		15	3	3-796690-3
OBSOLETE	-	-		100	20	2-796690-0
OBSOLETE	9	SEE DETAIL C		15	3	1-796690-9
OBSOLETE	9	SEE DETAIL B		10	2	1-796690-8
OBSOLETE	-	-	6.0	15	3	1-796690-7
OBSOLETE	-	-		10	2	1-796690-6
OBSOLETE	8	SEE DETAIL E	3.8	25	5	1-796690-5
OBSOLETE	8	SEE DETAIL D		20	4	1-796690-4
OBSOLETE	8	SEE DETAIL A		10	2	1-796690-3
	-	-		60	12	1-796690-2
	-	-		55	11	1-796690-1
	-	-		50	10	1-796690-0
	-	-		45	9	796690-9
	-	-		40	8	796690-8
	-	-		35	7	796690-7
	-	-		30	6	796690-6
	-	-		25	5	796690-5
	-	-		20	4	796690-4
	-	-		15	3	796690-3
	-	-		10	2	796690-2

THIS DRAWING IS A CONTROLLED DOCUMENT.

DIMENSIONS: mm

TOLERANCES UNLESS OTHERWISE SPECIFIED:
0 PLC ±-
1 PLC ±.3
2 PLC ±.25
3 PLC ±-
4 PLC ±-
ANGLES ±2

MATERIAL 1

FINISH 1

DWN E.ZANOLINI 14MAR2001
CHK D. BIEVENOUR 14MAR2001
APVD D. BIEVENOUR 14MAR2001
PRODUCT SPEC 108-20166
APPLICATION SPEC 114-20079
WEIGHT -

TE Connectivity

NAME TERMINAL BLOCK, PCB MOUNT ANGLED WIRE ENTRY, STACKING W/INTERLOCK, 5mm PITCH

SIZE	CAGE CODE	DRAWING NO	RESTRICTED TO
A2	00779	C-796690	-

CUSTOMER DRAWING | SCALE 4:1 | SHEET 1 OF 2 | REV E6

© 2026 TE Connectivity. All Rights Reserved.

REVISIONS					
P	LTR	DESCRIPTION	DATE	DWN	APVD
	-	SEE SHEET 1	-	-	-

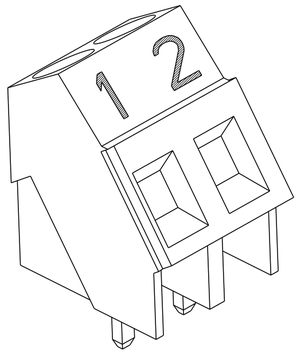

DETAIL A

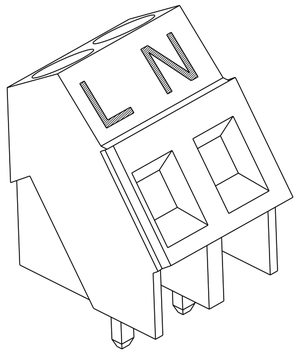

DETAIL B

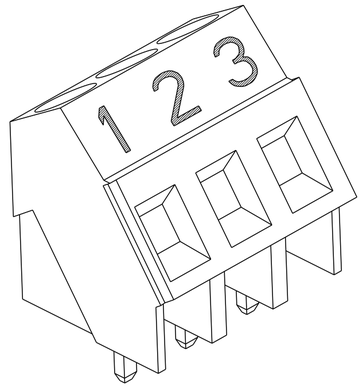

DETAIL C

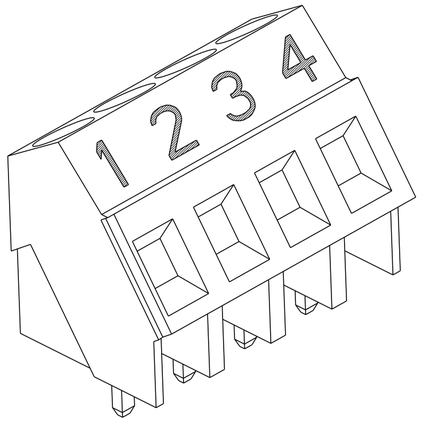

DETAIL D

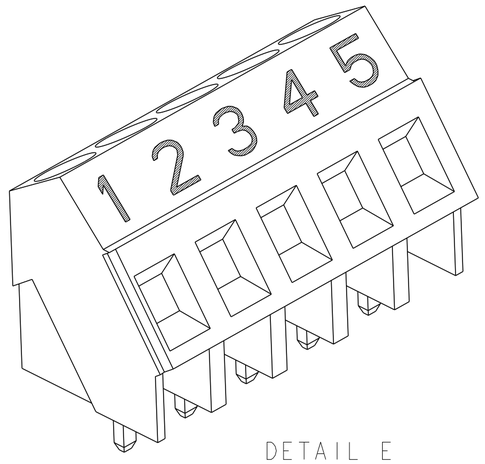

DETAIL E

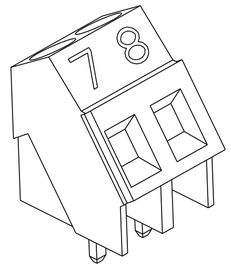

DETAIL G

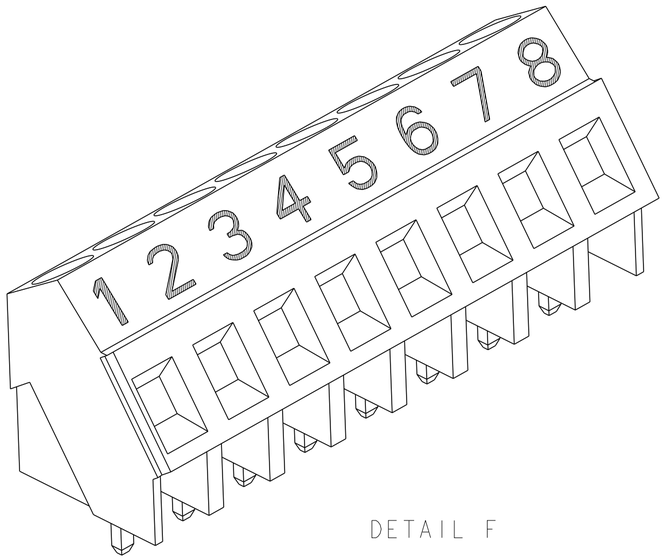

DETAIL F

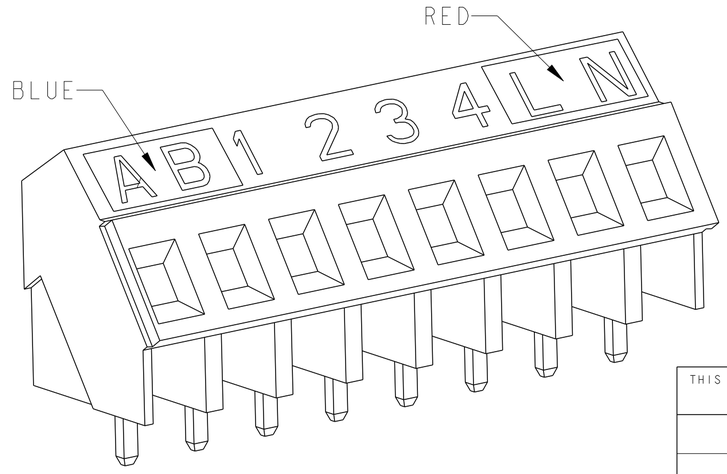

DETAIL K

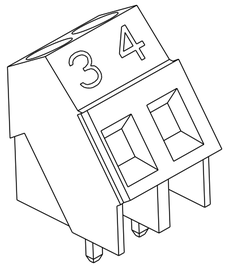

DETAIL H

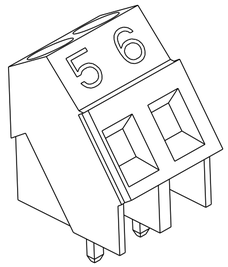

DETAIL J

NOTES:

1. MATERIALS AND FINISH:
   HOUSING : PA66 , UL94 V0, COLOR- GREEN
   CAGE: COPPER ALLOY , NICKEL PLATED
   TERMINAL: COPPER ALLOY ,4µm TIN PLATING OVER min. 1.27µm NICKEL PLATING.
   CLAMPING SCREW : M3 , COPPERY ALLOY , NICKEL PLATED
2. SUITABLE FOR 1,6-2,4mm PCB THICKNESS.
3. OPERATING TEMPERATURE RANGE : -40C TO +105C.
4. ELECTRICAL:
   WIRE RANGE : 30-12 AWG (0.05 ÷ 3 mm^2)
   RATED VOLTAGE : 300V
   RATED CURRENT : 17.5A
   CONTACT RESISTANCE : <15 m Ohm
   INSULATION RESISTANCE : >1000 M Ohm (500V DC)
5. RECOGNIZED UNDER THE COMPONENT PROGRAM OF UNDERWRITERS LABORATORIES INC. FILE N° E60677.
6. NOTE IS DELETED.
7. NOT CUMULATIVE TOLERANCE.
8. INK MARKED WHITE, UNLESS OTHERWISE SPECIFIED. NUMERICAL SEQUENCE FROM LEFT TO RIGHT.
9. INK MARKED BLACK, UNLESS OTHERWISE SPECIFIED. NUMERICAL SEQUENCE FROM LEFT TO RIGHT.
10. BUCHANAN LOGO TO APPEAR ON HOUSING, LOCATION OPTIONAL, WHERE SPACE PERMITS.
11. TORQUE : 17.5 in-lbs MAX

THIS DRAWING IS A CONTROLLED DOCUMENT.

DIMENSIONS: mm

TOLERANCES UNLESS OTHERWISE SPECIFIED:
0 PLC ±-
1 PLC ±.3
2 PLC ±.25
3 PLC ±-
4 PLC ±-
ANGLES ±2

MATERIAL 1

FINISH 1

DWN E.ZANOLINI 14MAR2001
CHK D. BIEVENOUR 14MAR2001
APVD D. BIEVENOUR 14MAR2001
PRODUCT SPEC 108-20166
APPLICATION SPEC 114-20079
WEIGHT -

TE Connectivity

NAME TERMINAL BLOCK, PCB MOUNT ANGLED WIRE ENTRY, STACKING W/INTERLOCK, 5mm PITCH

SIZE	CAGE CODE	DRAWING NO	RESTRICTED TO
A2	00779	C-796690	-

CUSTOMER DRAWING | SCALE 3:1 | SHEET 2 OF 2 | REV E6