© – TE Connectivity. All Rights Reserved.

REVISIONS					
P	LTR	DESCRIPTION	DATE	DWN	APVD
	M	REVISED PER ECR-26-286663	19MAY2026	MA	CAS

NOTES:

1. HOUSING: THERMOPLASTIC, BLACK. THREADED INSERTS: BRASS.

2. WILL ACCEPT (19) MULTIMATE PIN CONTACTS.

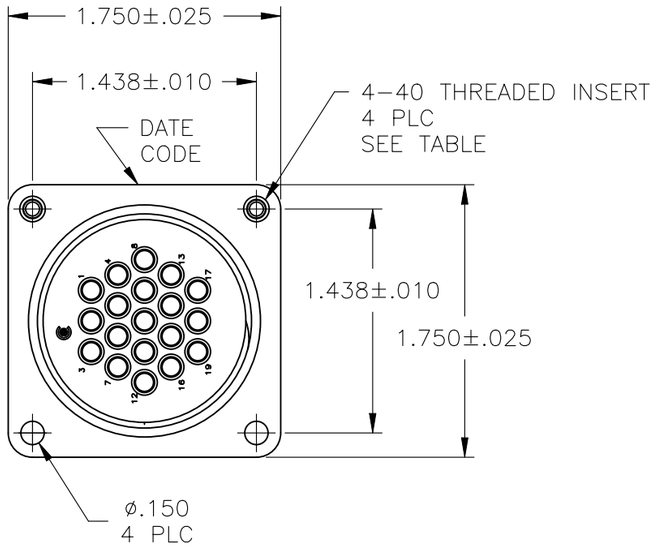

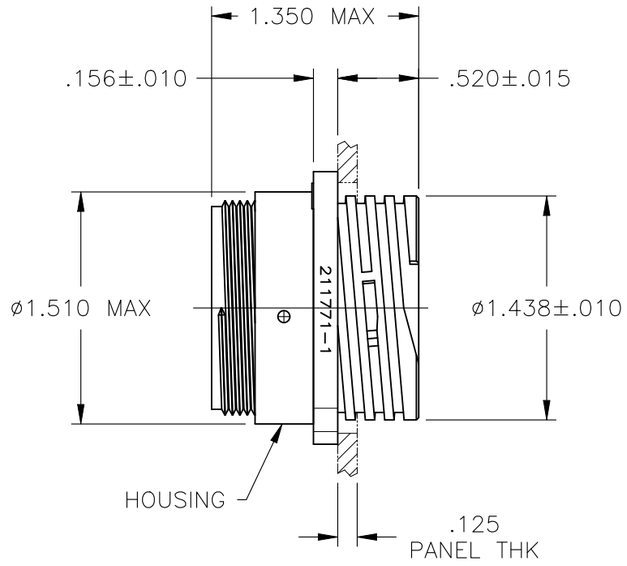

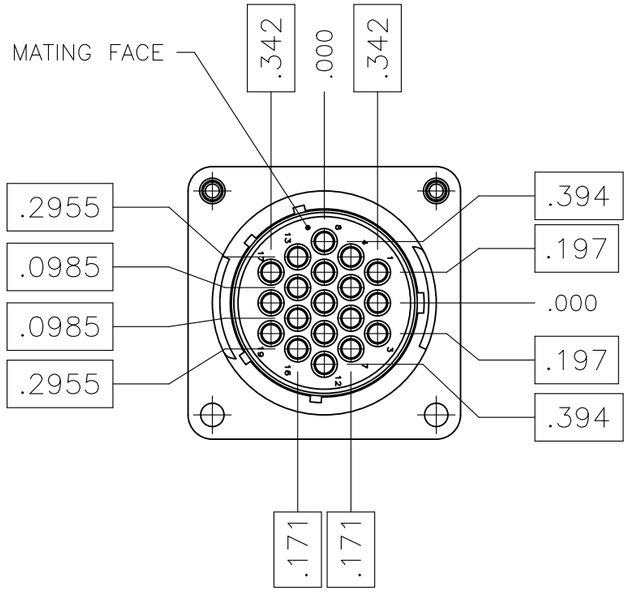

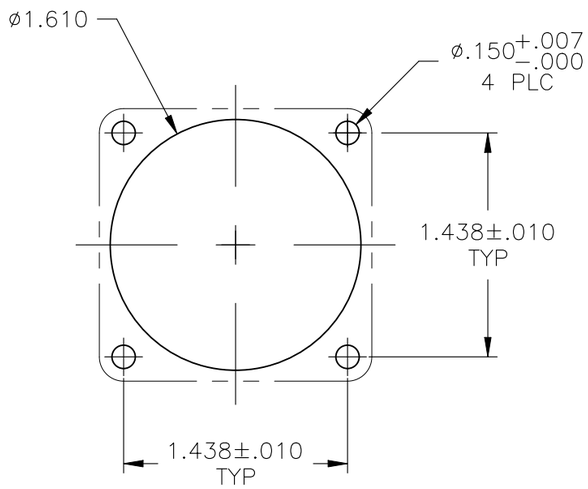

PANEL CUTOUT

YES	NORMAL	211771-2
NO	NORMAL	1 211771-1
4-40 THREADED INSERTS	KEYING	PART NUMBER

THIS DRAWING IS A CONTROLLED DOCUMENT.

DIMENSIONS: INCHES

TOLERANCES UNLESS OTHERWISE SPECIFIED:

0 PLC	± –
1 PLC	± –
2 PLC	± .005
3 PLC	± –
4 PLC	± –
ANGLES	± –

MATERIAL: –

FINISH: –

DWN C.OBERMAN 8-16-94
CHK R.STONE 8-17-94
APVD — 10-3-94 A.FRANTUM –
PRODUCT SPEC — 10-3-94 A.FRANTUM
APPLICATION SPEC —
WEIGHT

TE Connectivity

NAME: RECEPTACLE HOUSING, STD SEX, SERIES I, SHELL SIZE 23, CPC

SIZE	CAGE CODE	DRAWING NO	RESTRICTED TO
A3	00779	C-211771	—

CUSTOMER DRAWING

SCALE 1:1 | SHEET 1 OF 1 | REV M

1470-19 (1/15)