© 2025 TE Connectivity. All Rights Reserved.

REVISIONS					
P	LTR	DESCRIPTION	DATE	DWN	APVD
	NC	NEW RELEASE PER E.O. P15936	26FEB1999	-	RDR
	A	REVISED AND REDRAWN PER E.O. 166	-	-	RDR
	C	REVISED PER PCN-24-226269	06JAN2025	AJT	MB
	C1	REVISED PER PCN-25-253066	25JUN2025	UBF	CB

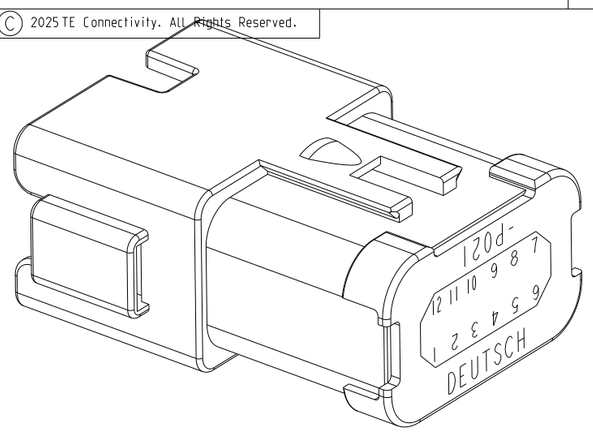

3D VIEW

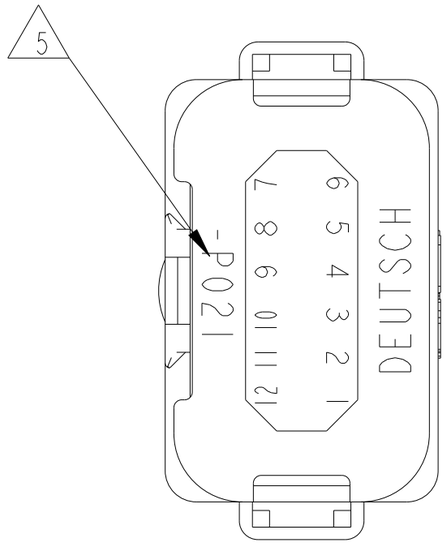

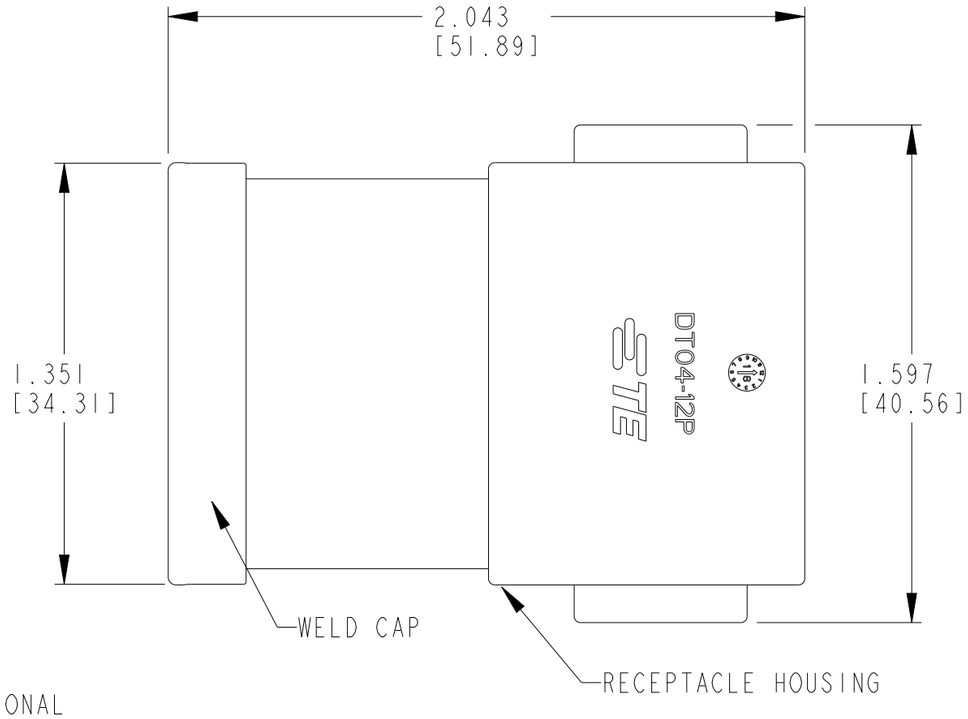

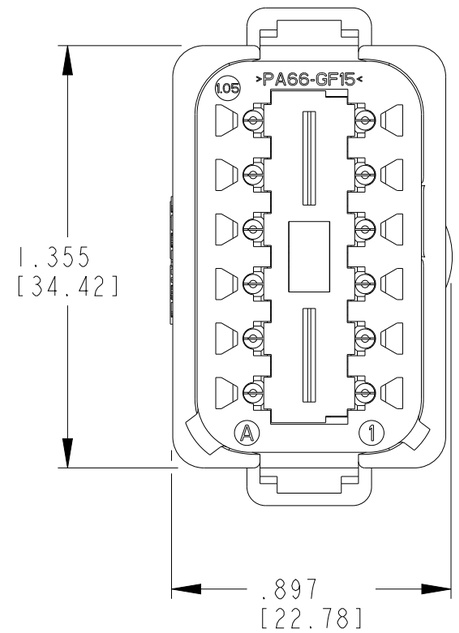

5 ORIENTATION OF "DEUTSCH" AND "-P021" TO BE OPTIONAL

4 MATERIAL:
HOUSING: PA66 GF15, GRAY
CAP: PA66 GF15, BLACK
WEDGE LOCK (INCLUDED): PBT GF30 (GREEN)
PINS:COPPER ALLOY, NICKEL PLATED

3. THE 12 PIN BUSBAR HAS A MAXIMUM CURRENT RATING OF 78 AMPS, 13 AMPS PER PIN.

2. FOR WIRE, CONTACT PERFORMANCE, AND APPLICATION CHARACTERISTICS, SEE ENVELOPE DRAWING 0425-015-0000 AND 0425-017-0000.

1. MATES WITH DT06-12SA-XXXX (XXXX = ALL MODIFICATIONS). CONSULT FACTORY FOR MODIFICATIONS.

NOTES:

THIS DRAWING IS A CONTROLLED DOCUMENT.

DIMENSIONS: INCHES[mm]

TOLERANCES UNLESS OTHERWISE SPECIFIED:
0 PLC ±-
1 PLC ±
2 PLC ±
3 PLC ±.025[0,63]
4 PLC ±
ANGLES ±-

MATERIAL 4

FINISH

DWN	P.BURKE	08MAY2000
CHK	-	15MAY2000
APVD	R.REED	16MAY2000
PRODUCT SPEC	108-151009	
APPLICATION SPEC	114-151009	
WEIGHT	18 g	

TE Connectivity

NAME: DT 12 WAY RECEPTACLE KEY ARRANGEMENT 12 PIN BUSBAR-NICKEL PLATED COLOR:GREY

SIZE	CAGE CODE	DRAWING NO	RESTRICTED TO
A3	00779	C-DT04-12PA-P021	-

CUSTOMER DRAWING | SCALE 2:1 | SHEET 1 OF 1 | REV C1

1470-19 (3/13)