THIS DRAWING IS UNPUBLISHED. RELEASED FOR PUBLICATION . . - -
© COPYRIGHT - By - ALL RIGHTS RESERVED.

REVISIONS					
P	LTR	DESCRIPTION	DATE	DWN	APVD
	L2	REVISED PER ECR-20-100230	31JUL2020	BDA	SW

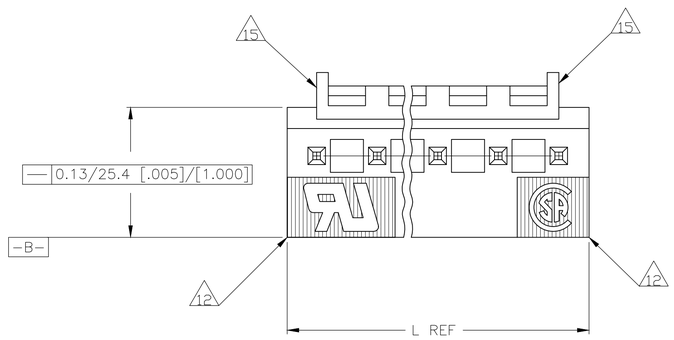

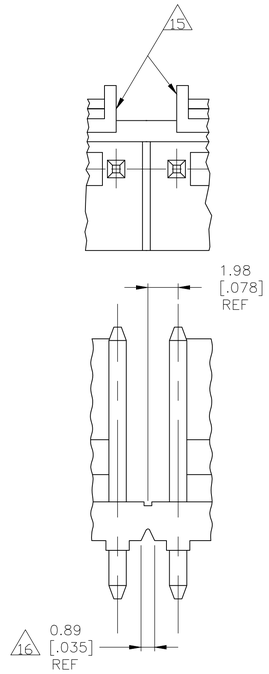

INTERRUPTED WALL FOR POSITION SIZES 6 AND ABOVE 14

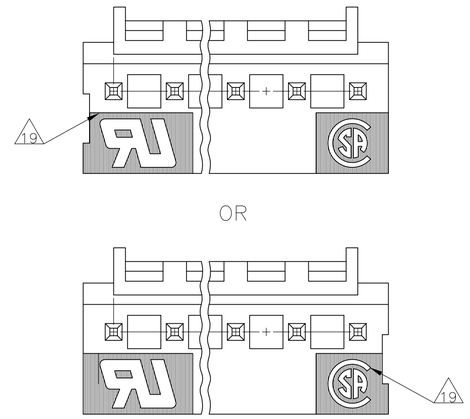

ALTERNATE CONSTRUCTION

1. MATERIAL
   HOUSING: THERMOPLASTIC POLYESTER,GLASS FILLED,UL94V-O.
   POST: COPPER ALLOY
2. FINISH
   HOUSING: NATURAL
   POST: BRIGHT TIN-LEAD (93/7) PLATE, 0.0038[.000150]-0.0088[.000350] THICK OVER NICKEL UNDERPLATE, 0.0013[.000050] MIN THICK.
4. POST SOLDERTAILS COMPLY WITH AMP SOLDERABILITY SPEC 109-11-2.
5. POST WITHSTANDS 13.34N (3 LB) MIN AXIAL FORCE IN EITHER DIRECTION WITHOUT DISLODGING.
6. APPLIES AT -A- .
7. APPLIES WHEN THE HEADER IS STRAIGHT.
8. PLASTIC PROJECTIONS PERMITTED IN THIS ZONE.
9. COORDINATE DIMENSIONS APPLIES FROM THE CENTER OF THE ACTUAL FEATURE.
10. SOLDER SIDE OF BOARD IS SHOWN.
11. THE RENTENTION TABS PROVIDE A ONE-TIME INTERFERENCE FIT IN THE 1.63[.064] DIAMETER BOARD HOLE FOR HEADER ASSEMBLY RETENTION DURING SOLDERING. FOUR TABS PER PEG, TWO PEGS PER HEADER ASSEMBLY (ONE PEG ONLY FOR 2 POSITION SIZE).
12. UL MARKING MAY NOT APPEAR ON THE 2 OR 3 POSITION SIZES. CSA MARKING MAY NOT APPEAR ON THE 2 POSITION SIZE.
13. DIMENSIONS IN BRACKETS ARE IN INCHES.
14. ALL POSITION SIZES HAVE THE BACKWALL NOTCHED ON BOTH ENDS AS SHOWN. THE 2 THRU 5 POSITION SIZES HAVE SOLID BACKWALLS. POSITION SIZES 6 AND ABOVE HAVE AN INTERRUPTED BACKWALL AT VARIOUS LOCATIONS (SEE TABLE FOR INTERRUPTION(S) LOCATIONS).
15. EDGE OF POLARIZING LOCK WALL TO BE IN LINE WITH CENTERLINE OF ADJACENT POST WITHIN ±0.13 [.005].
16. NOTCH SHOWN MAY OR MAY NOT APPEAR.
17. FINISH
    HOUSING: NATURAL
    POST: MATTE TIN PLATE, .000150" MIN THICK OVER NICKEL.
18. OBSOLETE PART NUMBER
19. RECESS FOR GATE PERMISSIBLE, EITHER END

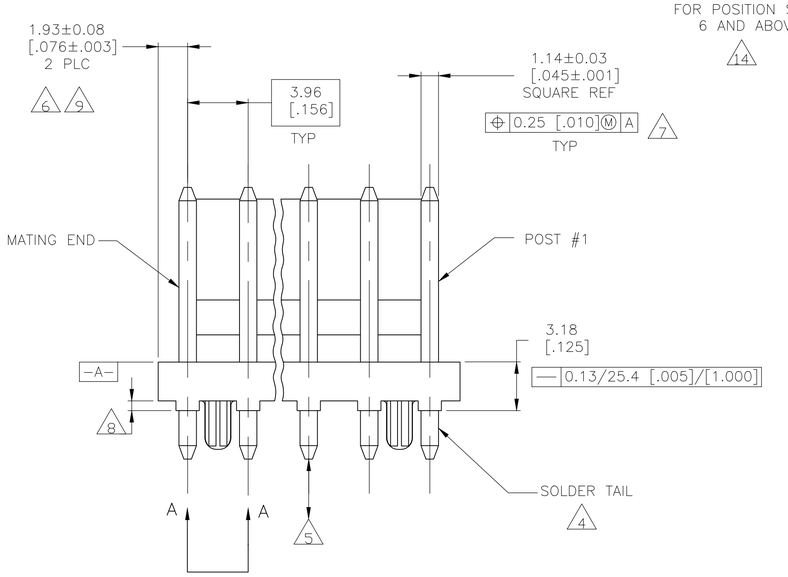

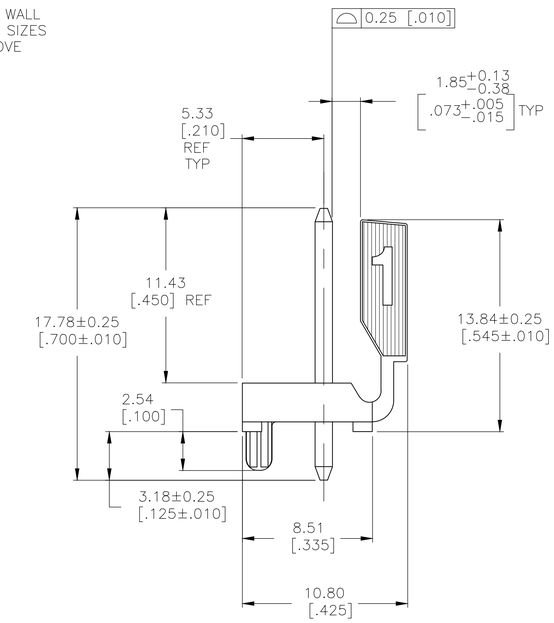

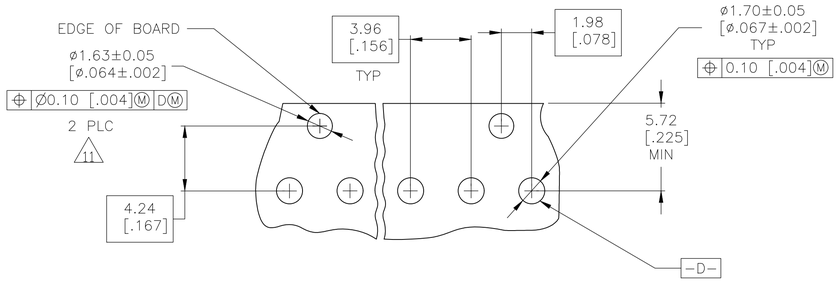

RECOMMENDED MOUNTING HOLE PATTERN FOR 1.57[.062] THICK P.C. BOARD 10

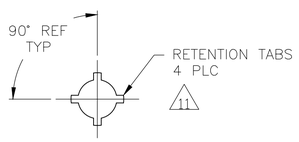

VIEW A-A
SCALE 10:1

NOTES	FINISH	BACKWALL INTERUPTION(S) BETWEEN POST	L		NO. OF CIRCUITS	PART NUMBER
	17	4&5, 7&8, 11&12, 14&15	71.20	[2.803]	18	4-644615-8
18		4&5, 7&8, 10&11, 13&14	67.23	[2.647]	17	~~4-644615-7~~
		4&5, 8&9, 12&13	63.27	[2.491]	16	4-644615-6
18		4&5, 8&9, 11&12	59.31	[2.335]	15	~~4-644615-5~~
		4&5 7&8, 10&11	55.35	[2.179]	14	4-644615-4
18		4&5 7&8, 10&11	51.38	[2.023]	13	~~4-644615-3~~
		4&5, 8&9	47.42	[1.867]	12	4-644615-2
		4&5, 7&8	43.46	[1.711]	11	4-644615-1
		3&4, 7&8	39.50	[1.555]	10	4-644615-0
		3&4, 6&7	35.53	[1.399]	9	3-644615-9
		4&5	31.57	[1.243]	8	3-644615-8
		4&5	27.61	[1.087]	7	3-644615-7
		3&4	23.65	[.931]	6	3-644615-6
		NONE	19.69	[.775]	5	3-644615-5
		NONE	15.72	[.619]	4	3-644615-4
		NONE	11.76	[.463]	3	3-644615-3
	17	NONE	7.80	[.307]	2	3-644615-2
18	2	4&5, 7&8, 11&12, 14&15	71.20	[2.803]	18	1-644615-8
18 18		4&5, 7&8, 10&11, 13&14	67.23	[2.647]	17	1-644615-7
18		4&5, 8&9, 12&13	63.27	[2.491]	16	1-644615-6
18		4&5, 8&9, 11&12	59.31	[2.335]	15	1-644615-5
18		4&5 7&8, 10&11	55.35	[2.179]	14	1-644615-4
18		4&5 7&8, 10&11	51.38	[2.023]	13	1-644615-3
18		4&5, 8&9	47.42	[1.867]	12	1-644615-2
18		4&5, 7&8	43.46	[1.711]	11	1-644615-1
18		3&4, 7&8	39.50	[1.555]	10	1-644615-0
18		3&4, 6&7	35.53	[1.399]	9	644615-9
18		4&5	31.57	[1.243]	8	644615-8
18		4&5	27.61	[1.087]	7	644615-7
18		3&4	23.65	[.931]	6	644615-6
18		NONE	19.69	[.775]	5	644615-5
18		NONE	15.72	[.619]	4	644615-4
18		NONE	11.76	[.463]	3	644615-3
18	2	NONE	7.80	[.307]	2	644615-2

THIS DRAWING IS A CONTROLLED DOCUMENT.

DIMENSIONS: mm [INCHES]

TOLERANCES UNLESS OTHERWISE SPECIFIED:
0 PLC ± -
1 PLC ± -
2 PLC ± -
3 PLC ± -
4 PLC ± -
ANGLES ± -

MATERIAL 1
FINISH 2 17

DWN 12AUG2003 S. CARPENTER
CHK 12AUG2003 D. BOSSI
APVD 12AUG2003 D. BOSSI
PRODUCT SPEC —
APPLICATION SPEC —
WEIGHT 0

TE Connectivity

NAME: MTA-156 HDR ASM,POLARIZED LOCK,STRT .045 SQ POT, SN OR SN-PB PLTD W/RTNTN PEGS

SIZE A1 | CAGE CODE 00779 | DRAWING NO C-644615 | RESTRICTED TO —

CUSTOMER DRAWING | SCALE 5:1 | SHEET 1 OF 1 | REV L2

4805 (1/15)