© 2023 TE Connectivity. All Rights Reserved.

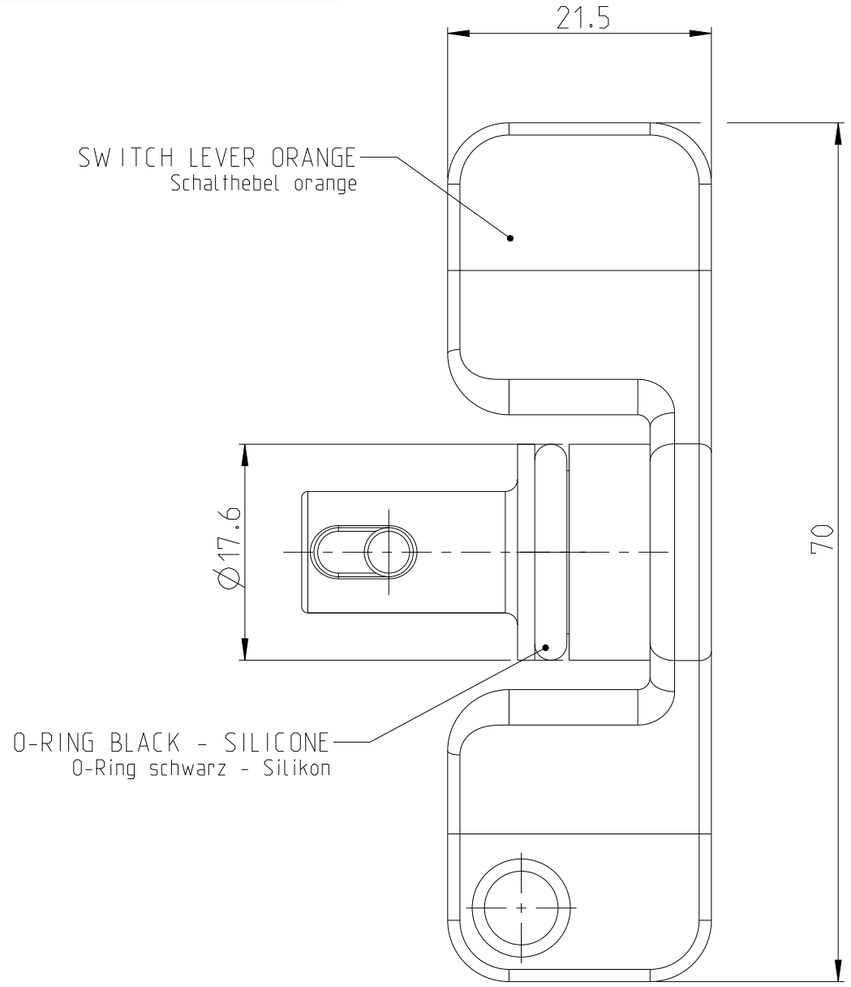

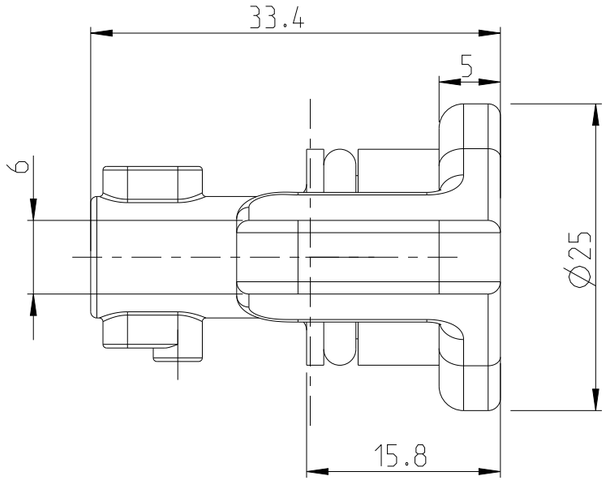

REVISIONS

P	LTR	DESCRIPTION	DATE	DWN	APVD
	A	ECN-24-246372 TE STANDARD	05JAN2024	SS	RB

NOTES
Bemerkungen

1 TE-CONNECTIVITY ORDER-NUMBER
TE-Connectivity Bestellnummer

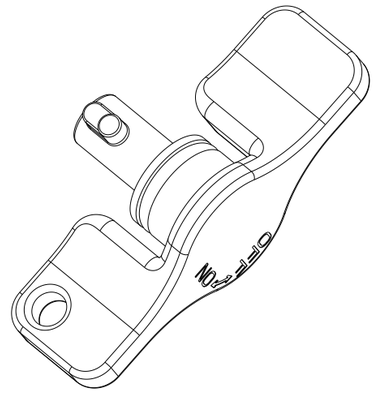

ISO 1:1

TE ORDER-NO.	REV.	DESCRIPTION	WEIGHT [g]	ITEM NO.
K1166610 1	A	SWITCH LEVER DF ON-OFF Schalthebel DF ON-OFF	17	1

PARTS LIST

THIS DRAWING IS A CONTROLLED DOCUMENT.

DIMENSIONS:	TOLERANCES UNLESS OTHERWISE SPECIFIED:
mm	DIN ISO 2768 cL
	0 PLC ±
	1 PLC ±
	2 PLC ±
	3 PLC ±
	4 PLC ±
	ANGLES ±
MATERIAL	FINISH

DWN Shrihari Y 13DEC2023
CHK K.Seeger 13DEC2023
APVD U.Grindemann 13DEC2023
PRODUCT SPEC
APPLICATION SPEC
WEIGHT
CUSTOMER DRAWING

TE Connectivity

NAME
SWITCH LEVER DF ON-OFF
Schalthebel DF ON-OFF

SIZE	CAGE CODE	DRAWING NO	RESTRICTED TO
A3	00779	C-35-200-069	-

SCALE	SHEET	REV
2:1	1 OF 1	A

1470-19 (3/13)